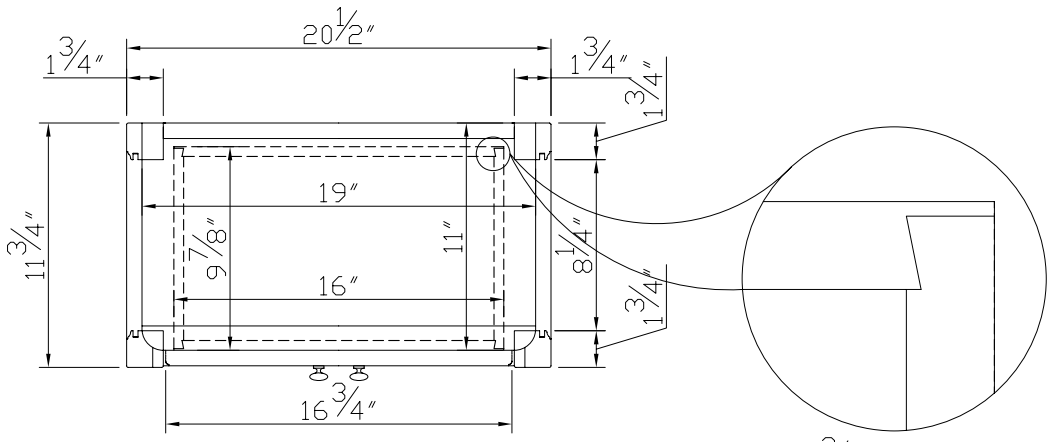

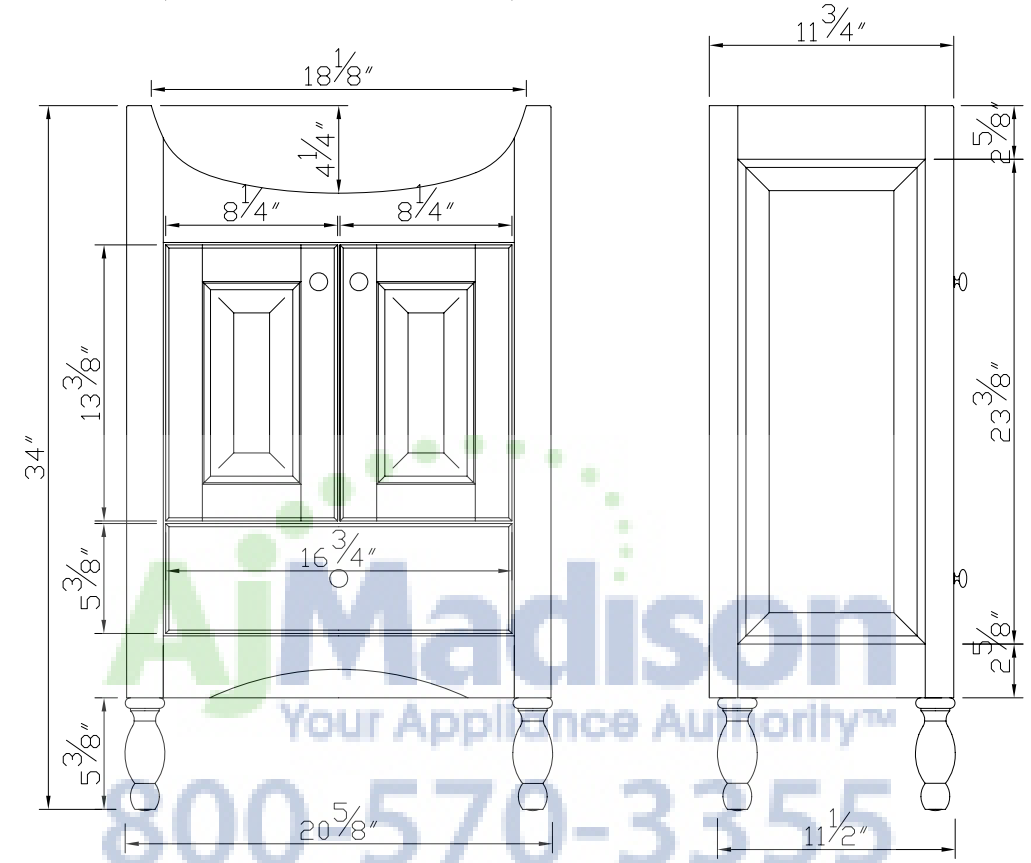

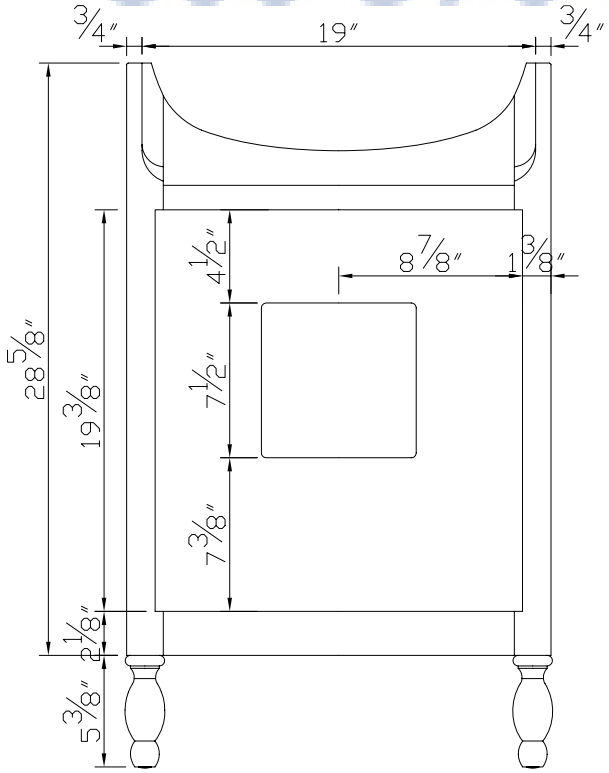

AjMadison
Your Appliance Authority™
800-570-3355

W22