MOEN

Buy it for looks. Buy it for life.®

Specifications

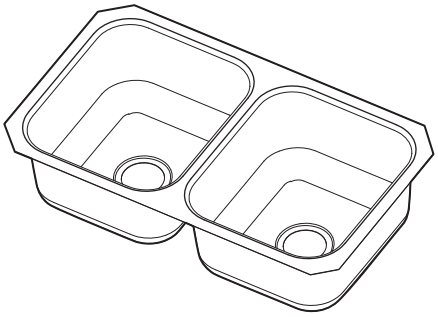

Lancelot® Undermount
Double Bowl Sink
Model: S22357
(UMTLDE-29" x 16" x 8")

SINK DESCRIPTION
- Manufactured of 18 gauge stainless steel
- Two bowls are a minimum of 14" x 16" x 8"
- Has two 3-1/2" diameter recessed drain openings
- Soundshield undercoating maximizes sound deadening and inhibits condensation
- Made in U.S.A.
- Silicone sealant not provided. Includes mounting bracket. Other standard mounting hardware not included

INSTALLATION
- Template enclosed with sink.
- Template ordering number 22508.

STANDARDS
- Third party certified to ASME A112.19.3/CSA B45.4 and all applicable specifications referenced therein

WARRANTY
- Limited lifetime warranty against material or manufacturing defects

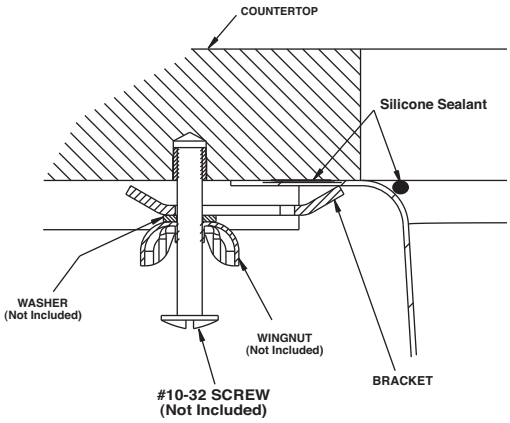

Installation Detail

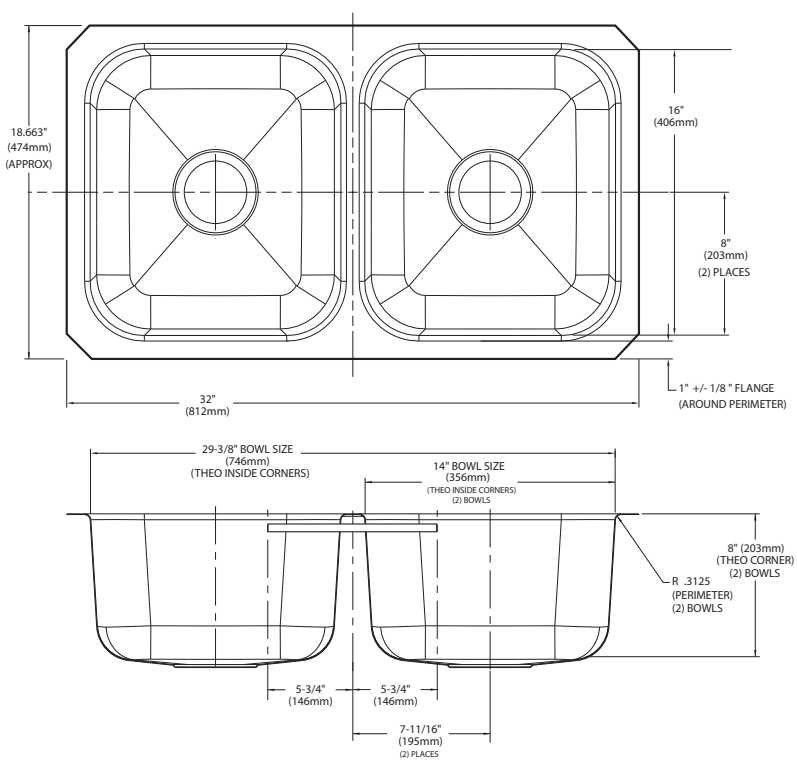

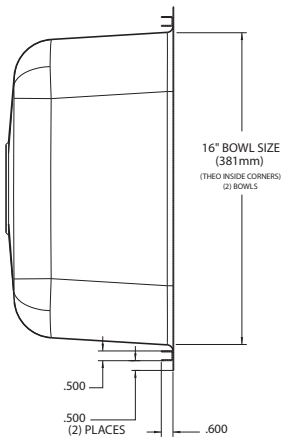

CRITICAL DIMENSIONS

(DO NOT SCALE)

Rev. 10/11

FOR MORE INFORMATION CALL: 1-800-BUY-MOEN
www.moen.com

11/17/2011 SPC12369 50000011865
Released 01