REFRIGERATOR

MODELS:

WRFF3436RB00 (Black)

© 2024 Whirlpool Corporation
Part No. W11748647 Rev. A

CABINET PARTS

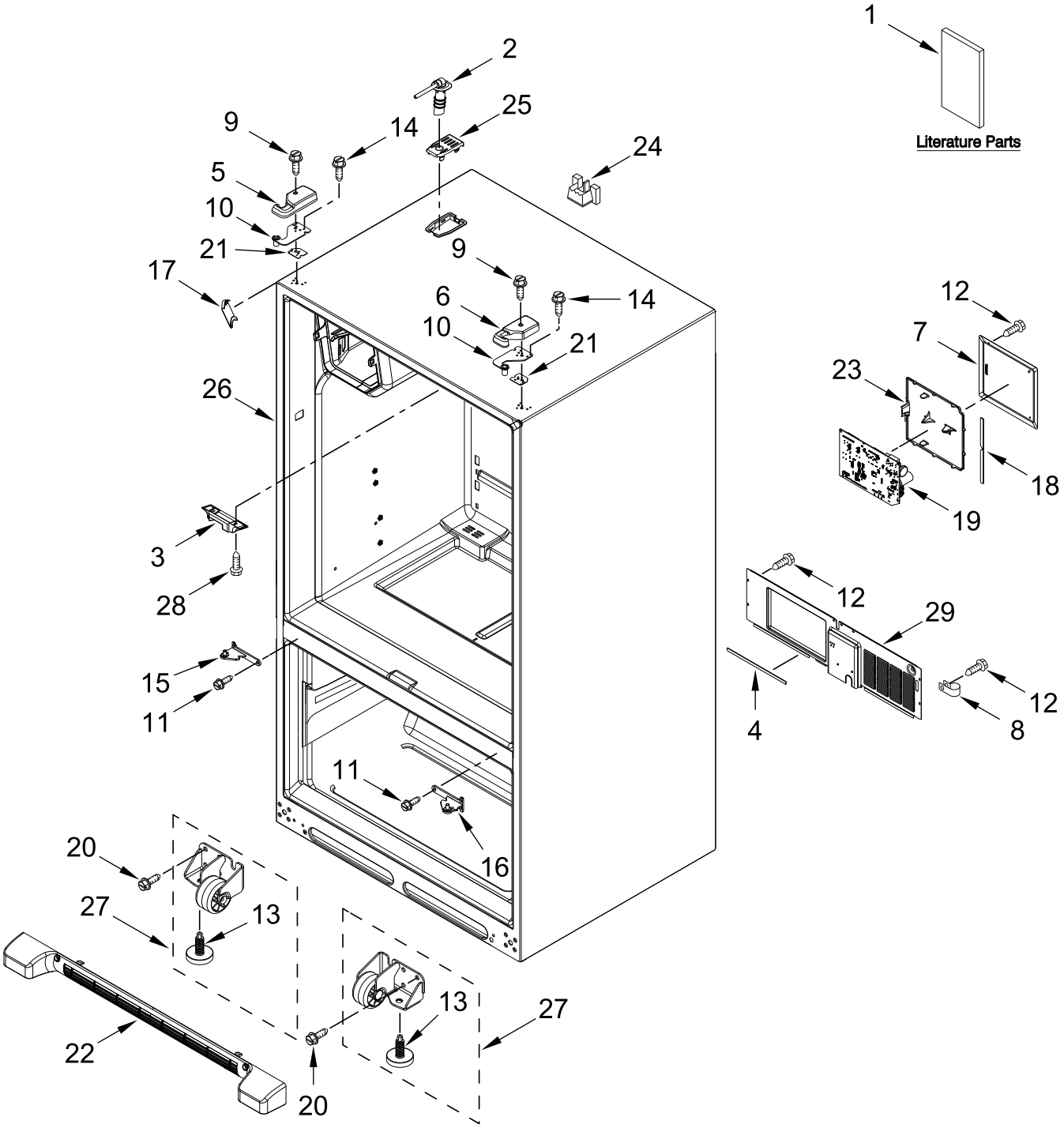

CABINET PARTS

Illus. No.	Part No.	Description
1		Literature Parts
	W11665550	Tech Sheet
	W11608713	Owners Manual
	W11730572	Energy Guide
2	W11232485	Tube, Water
3	12698403	Plate, Pivot
4	W11534848	Gasket
5		Cover, Top Hinge
		Left Hand
		(Includes Foil)
	W10337647	Black
6		Cover, Top Hinge
		Right Hand
	12962302B	Black
7	12961602	Cover, Control Box
8	M0108107	Clamp, Tube
9	12992602	Screw
10		Hinge, Top
	W11456626	Left Hand
	W11456625	Right Hand
11	W10673840	Screw (Stainless)
12	12990702	Screw
13	W10141622	Brake, Roller
14	12992403	Screw
15		Hinge, Center
	W11610757	Left Hand
16		Hinge, Center
	W11610758	Right Hand
17		Cover, Corner
	12587703B	Black
18	W10914798	Gasket, Control Box
19	W11454964	Control, Electronic
20	W10709365	Screw
21		Shim, Top Hinge
	12999501	Left Hand
	12999502	Right Hand
22		Grille, Toe
	W10534153	Black
23	W10296541	Lid, HV Control Box
24	W11651067	Block, Fill Tube
25		Cover, Fill Tube
	12981401B	Black
26		Cabinet (Not A Servicable Part)
27		Assembly, Roller
	W10515763	Left Hand
	W10515762	Right Hand
28	688983	Screw
29	W10270394	Cover, Unit

REFRIGERATOR LINER PARTS

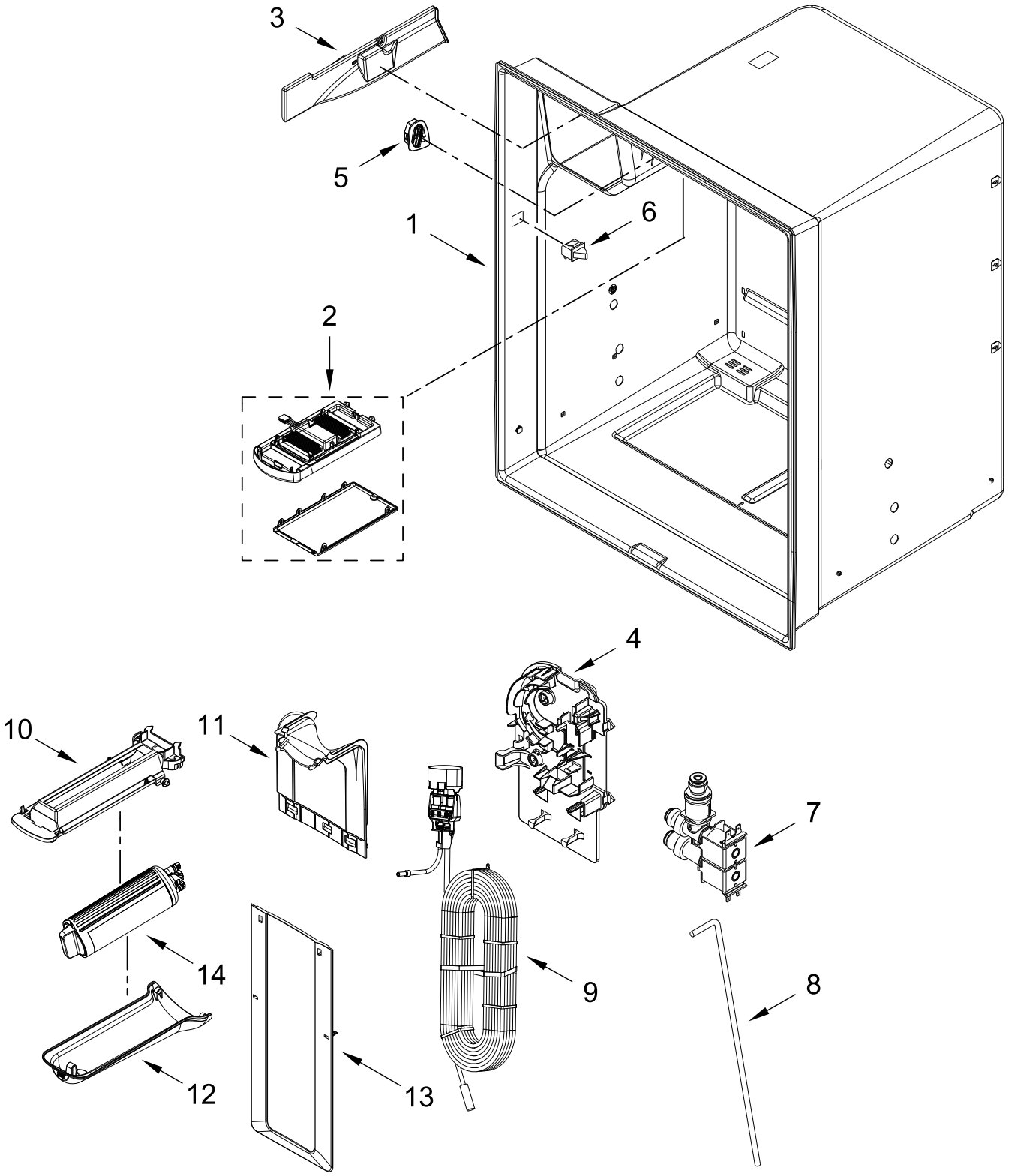

REFRIGERATOR LINER PARTS

Illus. No.	Part No.	Description
1		Liner (Not A Serviceable Part)
2	W11387579	Assembly, Upper Light (Includes LED Module and Lens)
3	W10309869	Cover, Wiring
4	W10334463	Bracket, Water Tank and Valve
5	W10555984	Assembly, Air Grille (Includes Damper Seal)
6	W10847849	Switch, Light
7	W11446814	Valve, Water Inlet
8	W11518277	Tube, Water
9	W11519216	Assembly, Water Tank and Manifold
10	W11510659	Bracket, Filter Base
11	W11513126	Cover, Upper Water Tank
12	W11510661	Cover, Filter
13	W11565236	Cover, Lower Water Tank
14	W11536439	Filter, Water

FREEZER LINER PARTS

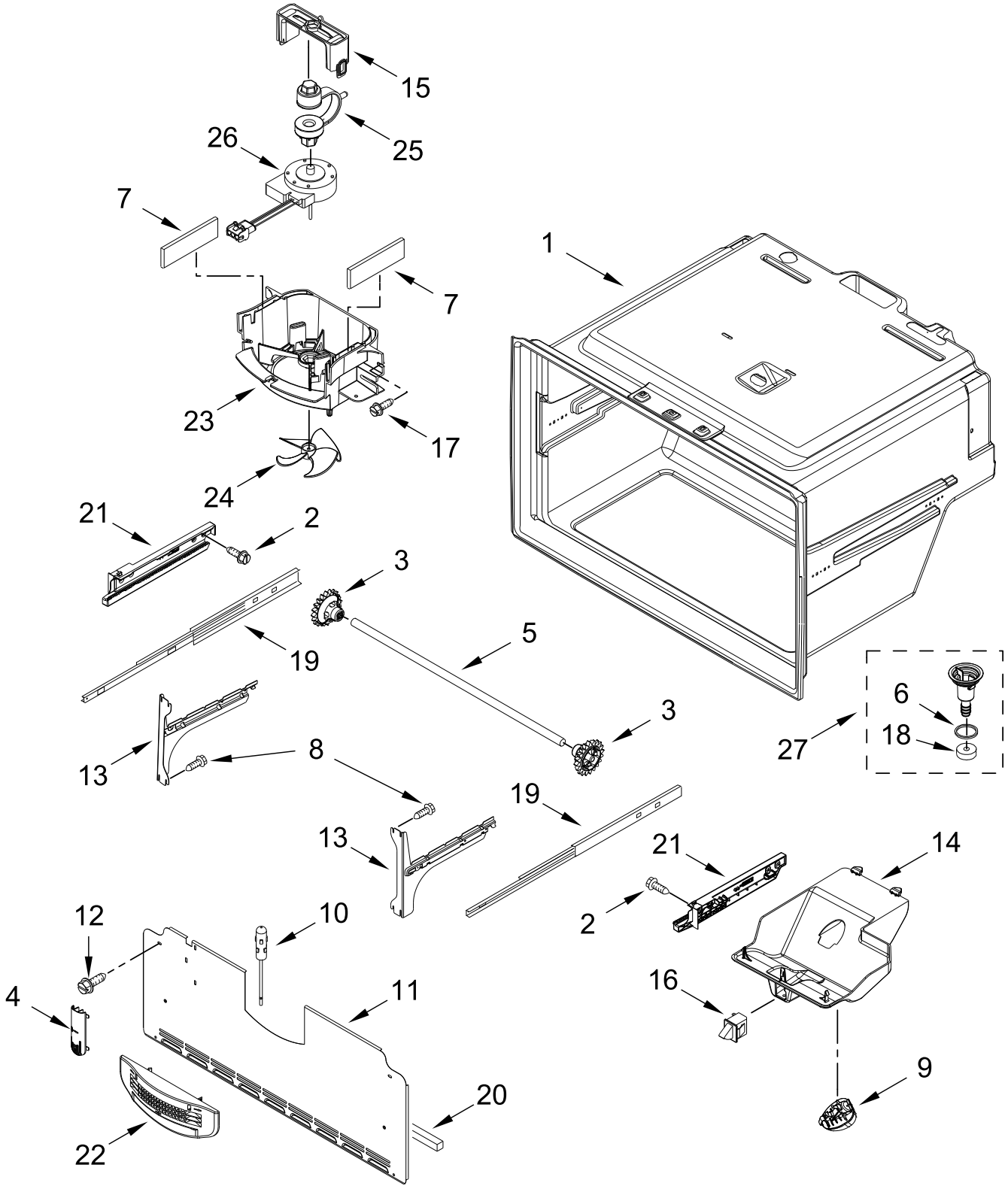

FREEZER LINER PARTS

Illus. No.	Part No.	Description
1		Liner (Not A Seviceable Part)
2	12990501	Screw
3	12002497	Gear
4	12815301	Cover, Thermistor
5	W10802332	Shaft, Rack
6	M0500703	Seal
7	A3189392	Gasket, Foam
8	12990521	Screw
9	W11468934	Light Module, LED
10	12791417SP	Thermistor
11	W10308421	Cover, Evaporator
12	12990511	Screw
13		Bracket, Door Slide
	W10330991	Left Hand
	W10330993	Right Hand
14	W11328652	Module, Light
15	12956601	Clip, Fan Motor
16	W11385734	Switch, Light
17	12990504	Screw
18	B8381501	Gasket, Drain
19	W11644400	Slide, Door
20	A3189396	Gasket
21		Adapter, Side
	W10284682	Left Hand
	W10284683	Right Hand
22	12959901	Grille, Air
23	12951401	Shroud, Evaporator
24	12986101	Blade, Fan
25	W10905511	Grommet, Fan Motor
26	W11314192	Motor, Evaporator (Includes Heater Harness and Defrost Thermostat)
27	W10662407	Assembly, Drain Funnel

REFRIGERATOR DOOR PARTS

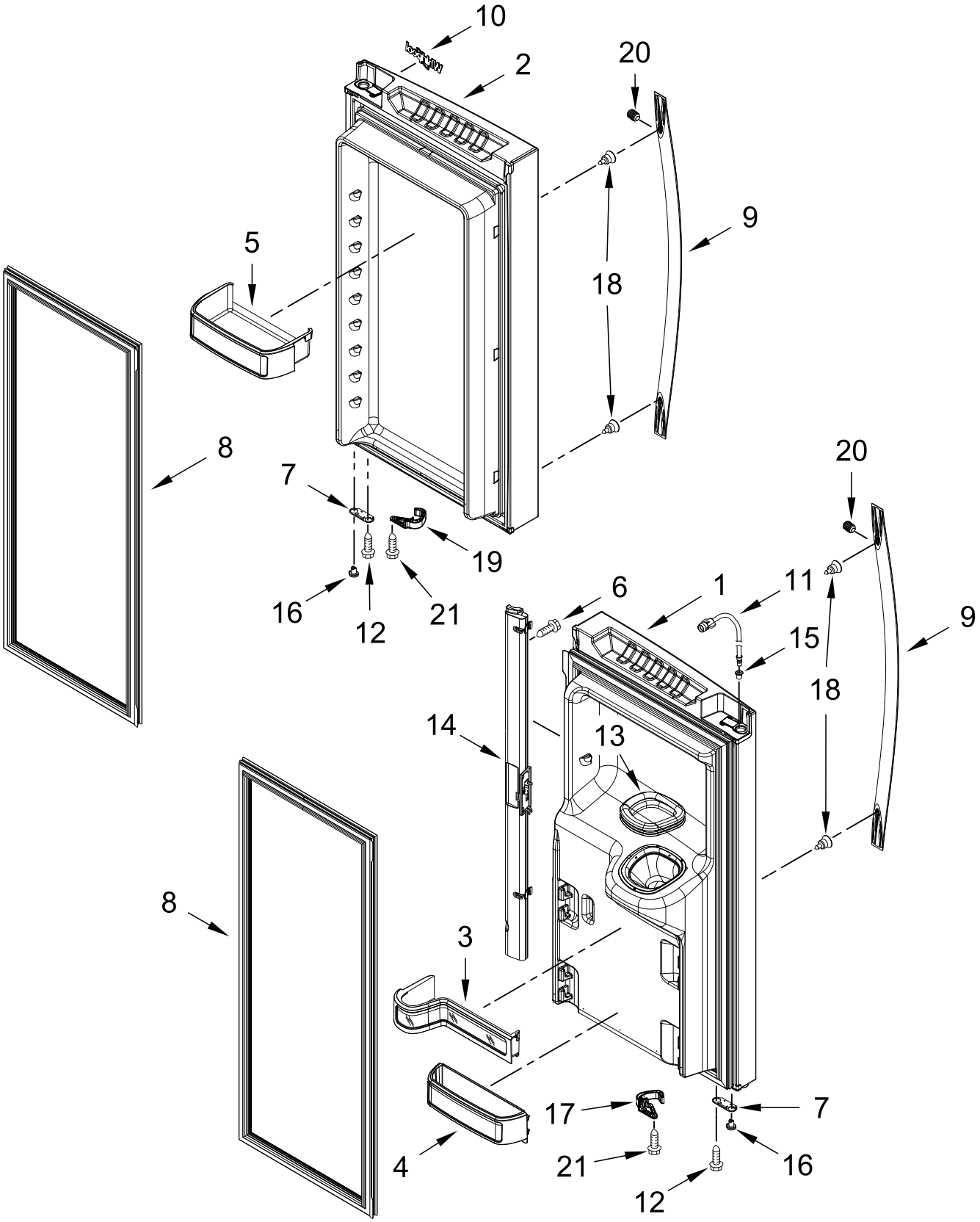

REFRIGERATOR DOOR PARTS

Illus. No.	Part No.	Description
1		Door, Left
	W10859351	Black
2		Door, Right
	W10859350	Black
3	W11698403	Bucket, LH Upper
4	W11698402	Bucket, Small
5	W11698404	Bucket, Gallon
6	12990204	Screw
7		Stop, Door
	12968202B	Black
8		Gasket, Door
	W10830055	Grey
9		Handle, Door
	W11101974	Black
10	W10884773	Badge
11	W11431179	Waterline, Door
12	12990521	Screw
13	W10287601	Seal, Ice Chute
14		Mullion, Door
	12722815B	Black
15	12996601	Clip, Bushing
16		Closure, Door
	12028505B	Black
17		Latch, Door Closer
		Left Hand
	W10725268	Black
18	W11328753	Screw
19		Latch, Door Closer
		Right Hand
	W10725267	Black
20	W10287055	Screw, Set
21	12990518	Screw

FREEZER DOOR PARTS

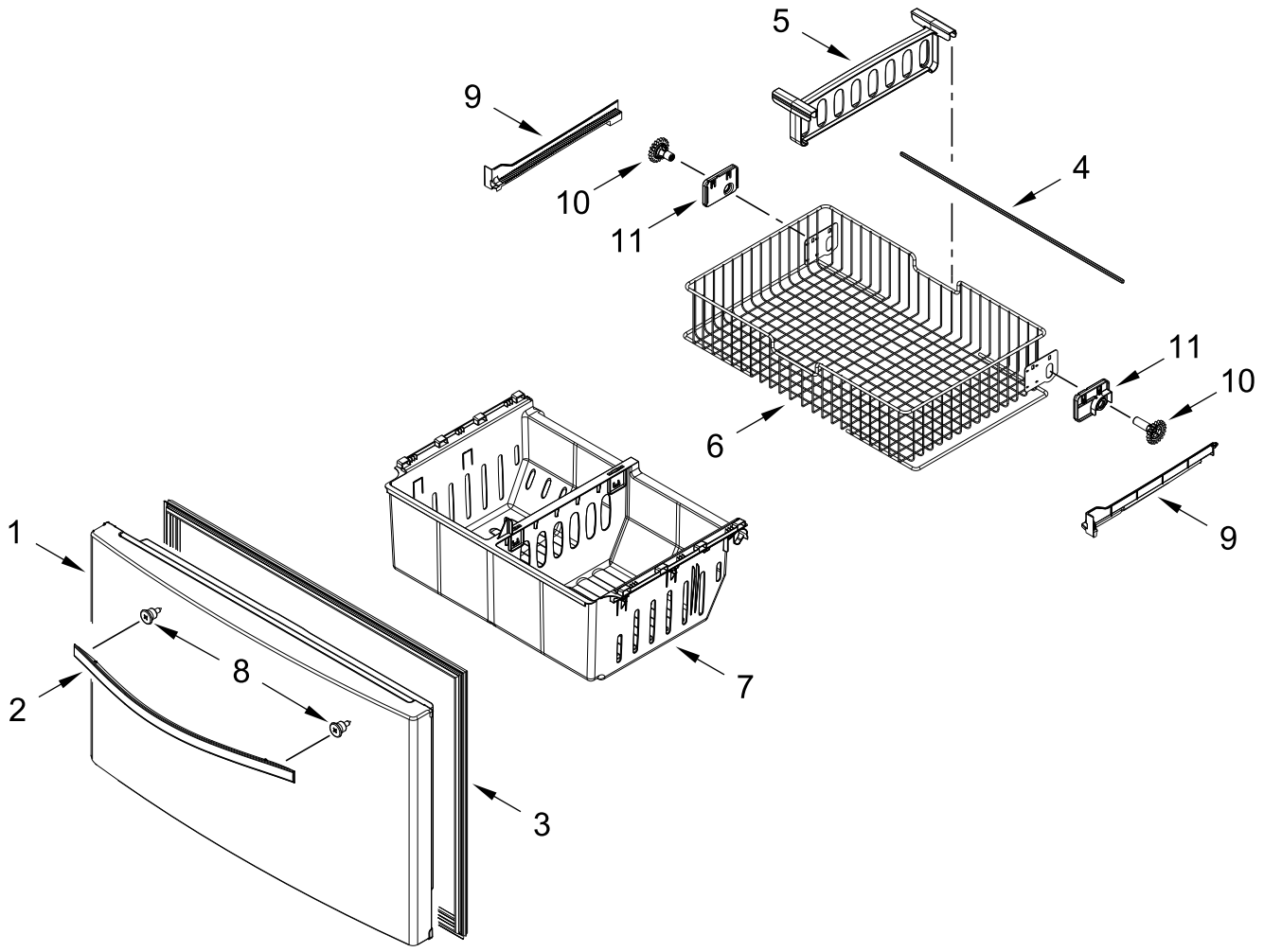

FREEZER DOOR PARTS

Illus. No.	Part No.	Description
1		Door, Freezer
	W10857731	Black
2		Handle, Door
	W11101980	Black
3		Gasket, Door
	W10714545	Grey
4	W10802333	Shaft, Rack
5	W10146439	Divider, Upper Basket
6	W11115237	Basket, Upper
7	W10293682	Bin, Lower
8	W11328753	Screw
9		Rack, Side
	W11309374	Left Hand
	W11309377	Right Hand
10		Spur, Gear
	W10474716	Left Hand
	W10474715	Right Hand
11		Mount, Gear
	W10348259	Left Hand
	W10348260	Right Hand

UNIT PARTS

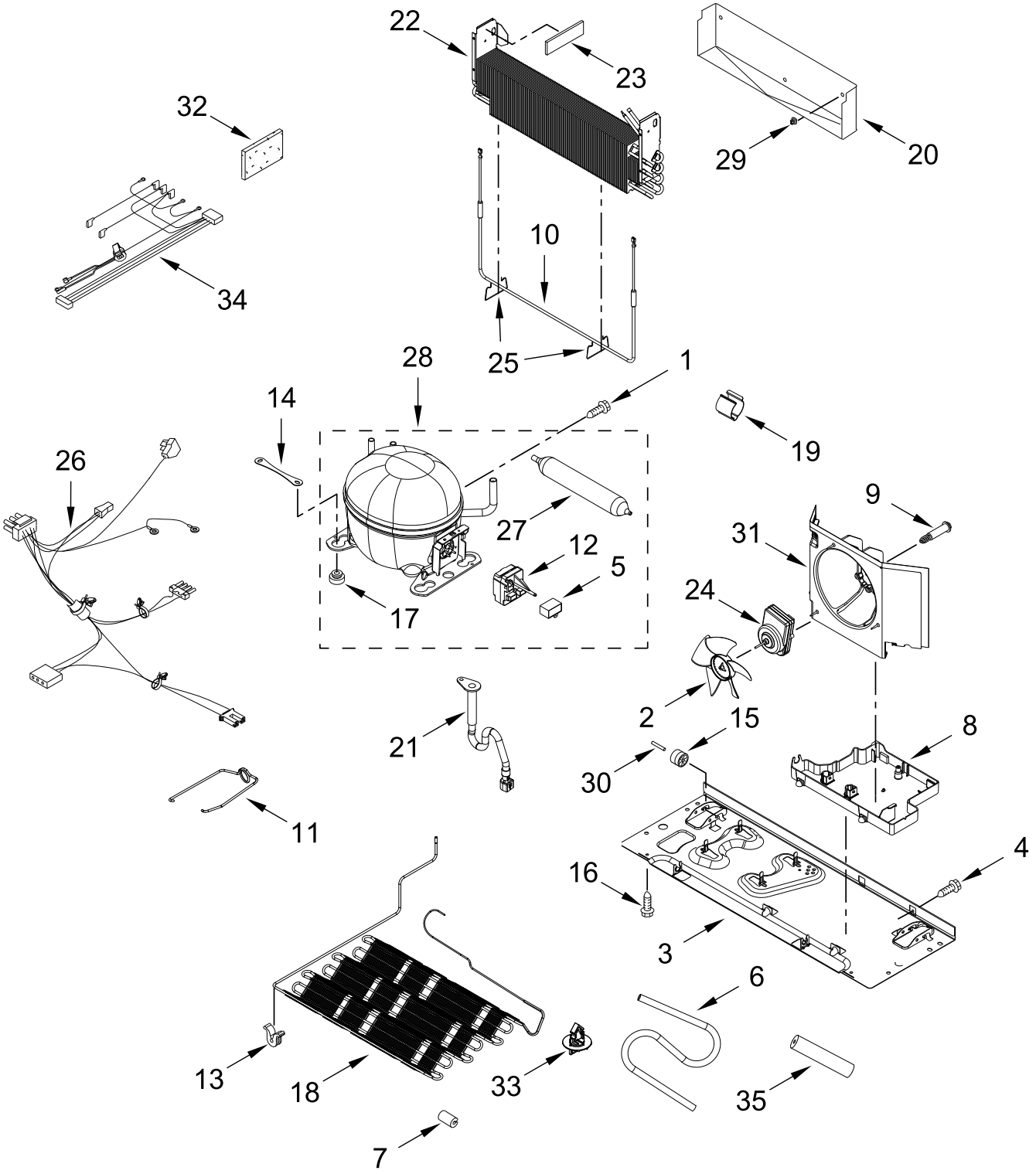
22
23
32
29
20
10
34
25
28
1
14
19
26
9
27
31
12
5
24
17
2
15
21
8
30
11
4
16
3
6
13
18
33
35
7

UNIT PARTS

Illus. No.	Part No.	Description
1	12992301	Screw
2	12825803	Blade, Fan
3	W11604794	Basepan
4	12990511	Screw
5	W10350564	Capacitor
6	W11623085	Tube, Suction
7	2319835	Grommet, Condenser
8	W10655368	Pan, Drain
9	W10622701	Screw
10	W11287565	Heater, Defrost
11	W11629200	Strap, Bale
12	W11359985	Device, Start
13	W10137529	Grommet, Condenser
14	W10236396	Strap, Compressor
15	12477102	Roller
16	12992101	Screw
17	W11631702	Grommet
18	W11597885	Condenser
		(Also Order the Following Lokring™ Parts)
	W11506623	5 NK MS 00
		(Discharge Tube to Condenser)
	W11504432	6/5 NR MS 00
		(Heat Loop to Condenser)
19	W10281329	Clip, Drier
20	W11337767	Tray, Drip
21	W10622099	Extension, Drain Tube
22	W11337423	Evaporator
		(Also Order the Following Lokring™ Parts)
	W11504423	8/2 NR AL 00
		(Capillary Tube to Evaporator)
	W11504415	8.5/8 NR MS 00
		(Suction Line to Evaporator)
23	W11244122	Gasket, Foam
24	W11505534	Motor, Condenser Fan
25	W11380964	Clip, Heater
26	W11654037	Harness, Unit (Includes Power Cord)
27	W10805035	Drier (Service Drier Without Dye)
		(Also Order the Following Lokring™ Parts)
	W11504445	5/4 NR MS 00
		(Heat Loop to Drier)
	W11504447	5/1.8 NR MS 00
		(Capillary Tube to Drier)
28	W11563970	Compressor
		(Also Order the Following Lokring™ Parts)
	W11504416	8.5/6 NR MS 00
		(Suction Tube to Compressor)
	W11504431	7/5 NR MS 00
		(Discharge Tube to Compressor)
	W11506621	6 NK MS 00
		(Charging Tube to Compressor)
	W11506635	Tube, Charging (1/4 in w/ Schrader Valve)
29	10623002	Clip, Evaporator
30	12477202	Axle, Roller
31	W11463236	Shroud, Condenser Fan
32	2169104	Insulation, Sound Deadening
33	W10815863	Clip, Condenser
34	W11309682	Harness, Evaporator Heater (Includes Defrost Thermostat)
35	W10303521	Sleeve
		REFRIGERANT CHARGE
		51 grams (R600a)

SHELF PARTS

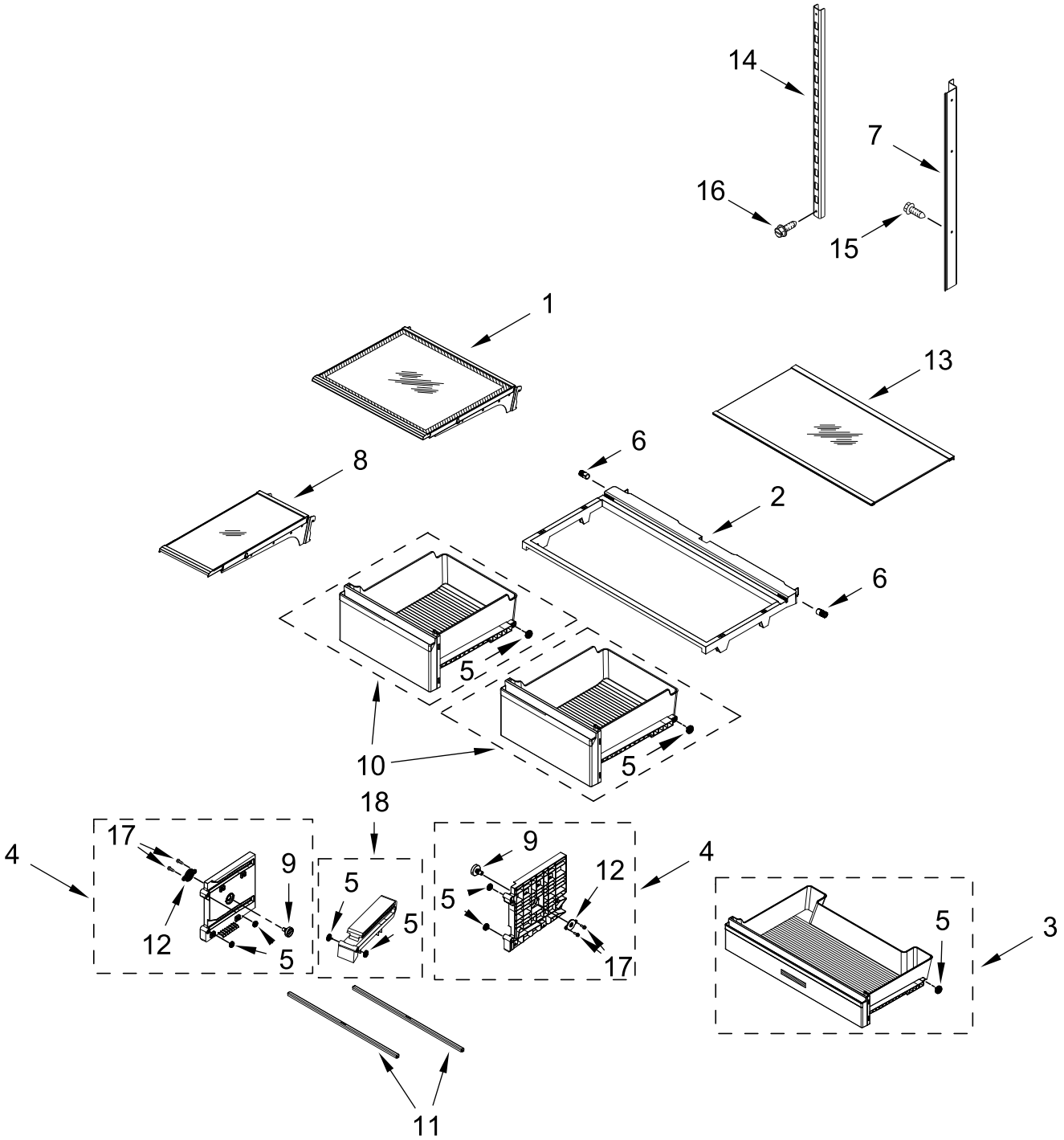

SHELF PARTS

Illus. No.	Part No.	Description
1	W11697422	Shelf, Stationary
2	W11705144	Frame, Pan Cover Glass
3	W11702374	Drawer, Pantry
4		Adapter, Side
	W11702403	Left Hand
	W11702400	Right Hand
5	W11606482	Assembly, Crisper Roller
6	W11705308	Support, Crisper Frame
7		Ladder, Side
	W10251966	Left Hand
	W10251965	Right Hand
8	W11697425	Shelf, Mini
9	W10840922	Knob, Side Support
10	W11694348	Assembly, Crisper Pan
11	W11700717	Brace, Crisper Support
12	W10840918	Flange, Side Support
13	W11694315	Glass, Pan Cover
14	W10273464	Ladder, Center
15	12990513	Screw
16	12990512	Screw
17	W10804977	Screw
18	W11702378	Assembly, Pan Center Support

DISPENSER FRONT PARTS

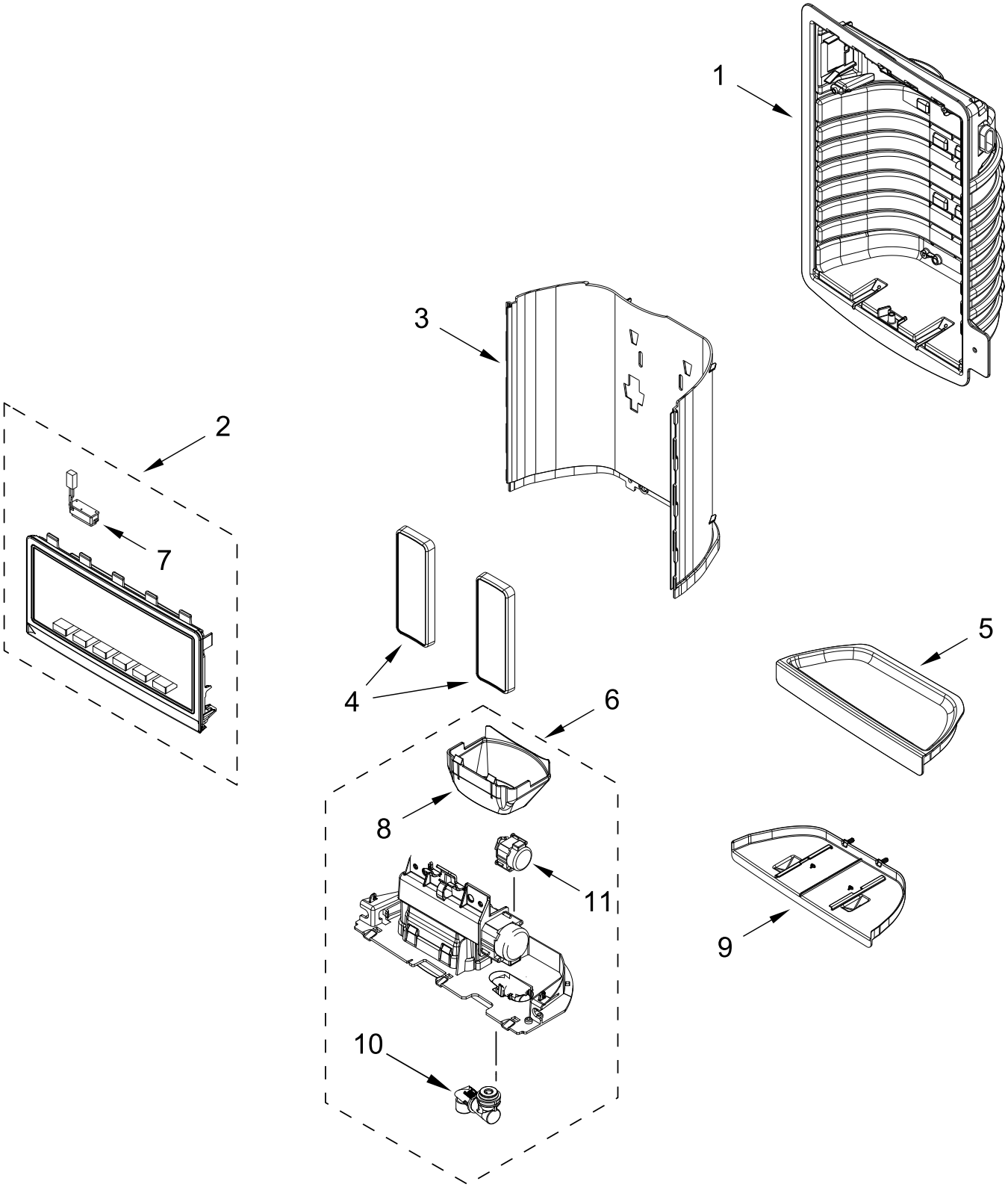

DISPENSER FRONT PARTS

Illus. No.	Part No.	Description
1		Housing, Dispenser (Not Serviced)
2	W11600494	Assembly, Stealth User Interface (Includes Light Feature)
3		Wall, Dispenser False
	W11045976	Black
4		Assembly, Pad
	W10353847	Black
5		Tray, Dispenser
	W11045971	Black
6	W10353552	Assembly, Separator (Includes Spigot and Ice Guide)
7	W10238083	Assembly, LED
8	W10339578	Guide, Ice
9		Slide, Dispenser Tray
	W10267861	Black
10	2316647	Assembly, Spigot Body
11	W10205979	Motor, Ice Door

ICEMAKER AND ICE CONTAINER PARTS

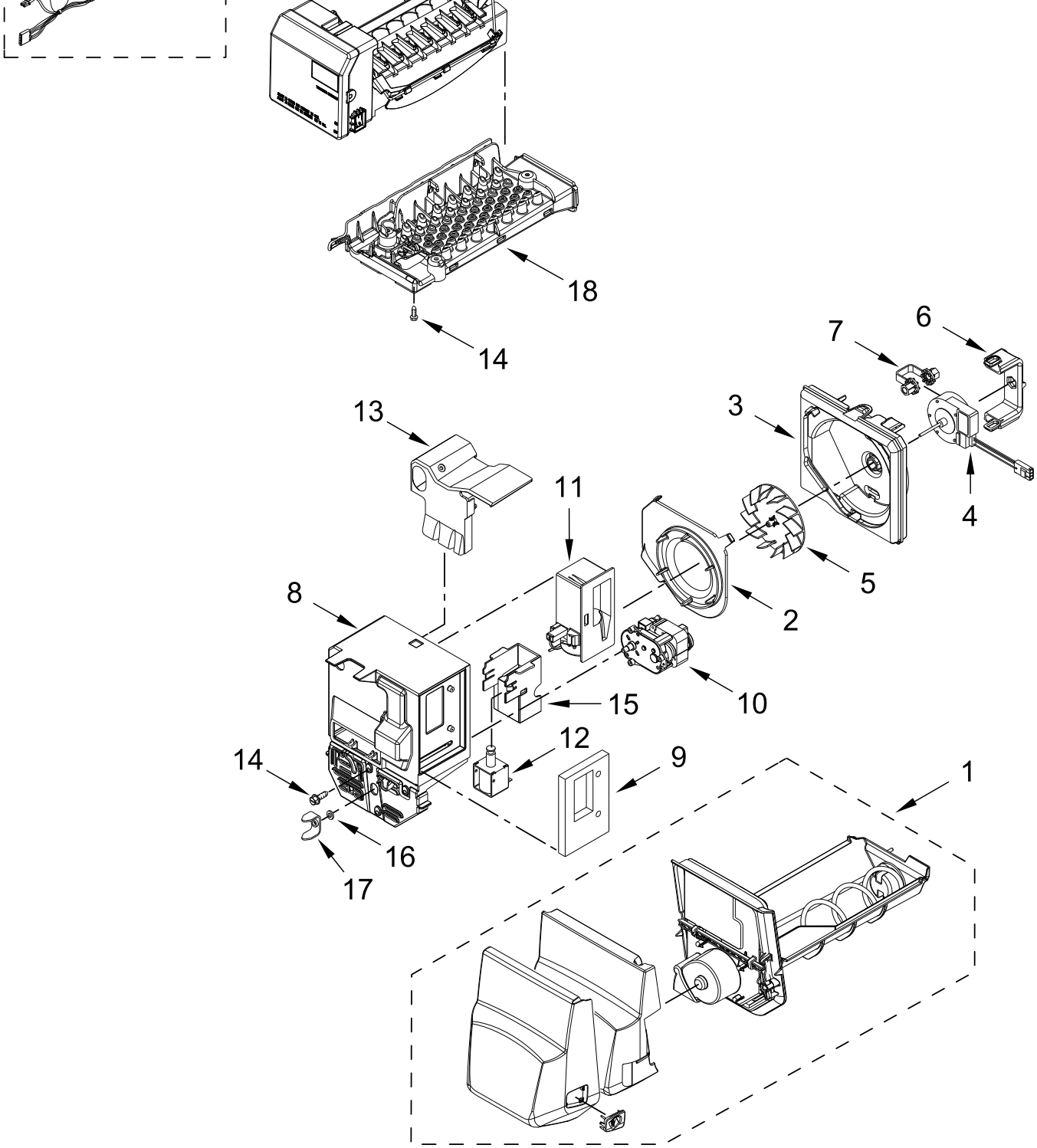

ICEMAKER AND ICE CONTAINER PARTS

Illus. No.	Part No.	Description
1	W11097357	Assembly, Ice Bin
2	W10121282	Inlet, Blower
3	W10309863	Scroll, Blower
4	W11299369	Motor, Fan
5	W10123444	Wheel, Blower
6	12956603	Clip, Fan Motor
7	W10151687	Grommet, Fan Motor
8	W10309864	Divider, Ice Box
9	12920001	Gasket, Damper
10	W10884561	Motor, Dispenser
11	W10196393	Damper, Control
12	W11182941	Assembly, Solenoid
13	W10118612	Liner, Divider
14	12990511	Screw
15	W10346971	Bracket, Solenoid
16	W10465946	Washer
17	63052A001	Yoke, Ice Dispenser
18	W11323371	Assembly, Impinger
19	W11525256	Assembly, Complete Icemaker
20	W11309962	Harness, Icemaker
21	12791417SP	Thermistor

OPTIONAL PARTS

Illus. No.	Part No.	Description
		TOUCH-UP PAINT
	72032	Black
		PAINT, PRESSURIZED SPRAY (12 oz.)
	350939	Enamel, Black
	285006	Black
		Important: The spray paint is not to be used where the paint may make contact with the door gaskets.
		MISCELLANEOUS
	212643	Sealer, Gum (4 Feet)
	876370	Insulation (2 Pieces, 3" x 24" x 48")
	876305	Insulation Kit (14 Pieces, 3" x 24" x 48")
	978941	Insulation, Fiberglass (63 1/2" x 35 1/2" x 2 5/8")
	505587	Sealer, Mastic (1 Qt)
	503695	Cork, Sealer
	542638	Grease, Silicone (1/2 Oz.)
	833938	Kit, Terminal Connector
	8003RP	Kit, Water Inlet