Kräus®

INSTALLATION MANUAL

Aplos Single Lever Vessel Faucet

KEF-15300

 © 2013-2014 Kraus USA Inc.

Thank you for purchasing Kraus

We would like to take this opportunity to thank you for your business with Kraus USA. It is our sincere hope that you are completely satisfied with your experience. We welcome any questions or comments you may have, and will be glad to assist you in the future.

For more information about Kraus products, please visit our website at:

www.kraususa.com

Please register your new Kraus product at the following web address in order to activate the warranty and receive the full benefit of customer support:

www.kraususa.com/registration

Sincerely,

Kraus Customer Service Department

Prior to Installation:

- Make sure you have all necessary parts by checking the diagram and parts list. If any part is missing or damaged, please contact Kraus Customer Service at 800-775-0703 for a replacement
- Turn off the hot and cold water lines at the angle stops and turn on the old faucet to release any built-up pressure
- Pre-drilled countertop hole size requirement: 1-3/8" (min)
- Max countertop thickness: 1-3/8"

Replacement Parts

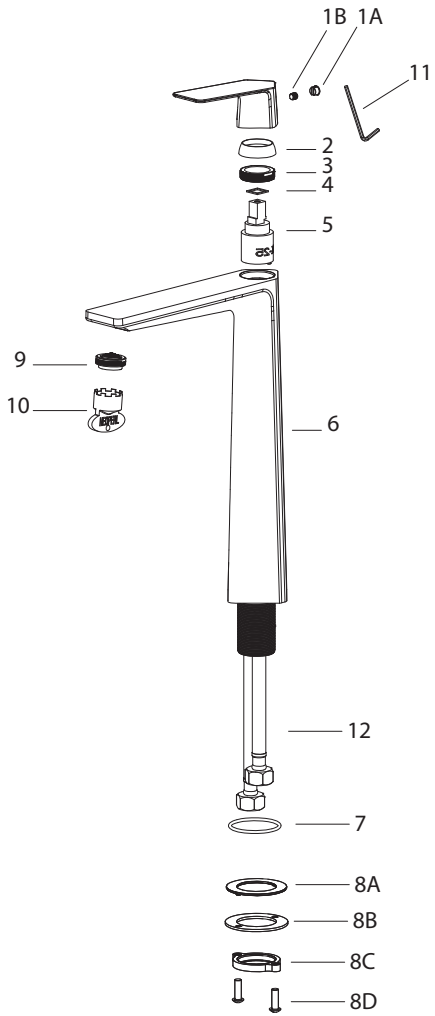

1. (A) Index Button
   (B) Set Screw
2. Metal Handle
3. Cartridge Cover
4. Locking Nut
5. Cartridge
6. Faucet Body
7. Rubber Washer
8. Mounting Hardware
   (A) Rubber Washer
   (B) Metal Washer
   (C) Mounting Nut
   (D) Mounting Screws
9. Aerator
10. Aerator Key
11. Hex Wrench
12. Hot & Cold Waterlines

Tools you will need:

Wrench

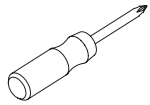

Phillips Screwdriver

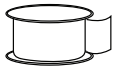

Pipe Tape

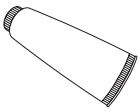

Silicone Sealant
(optional)

Safety Goggles

Faucet Installation Procedure

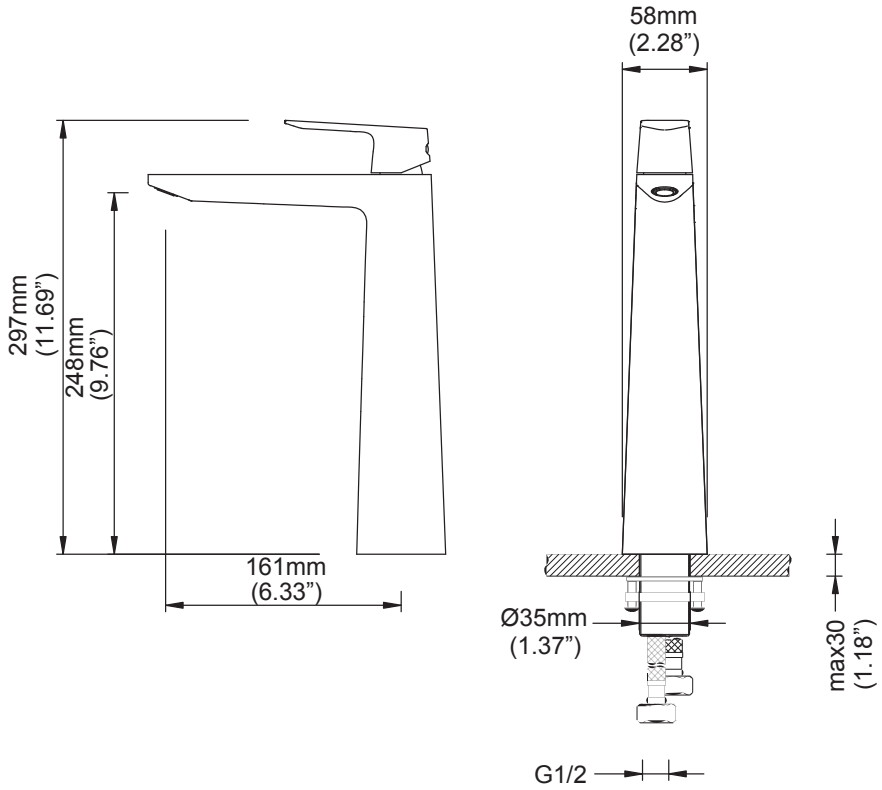

Installer Tip:

Shut off main water supply before installing new faucet

Step 1: Remove mounting hardware

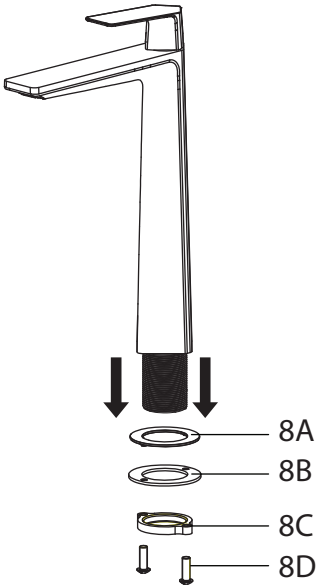

Remove the mounting screws (8D), mounting nut (8C), metal washer (8B), and rubber washer (8A) from the mounting pipe

Step 2: Install hot & cold waterlines

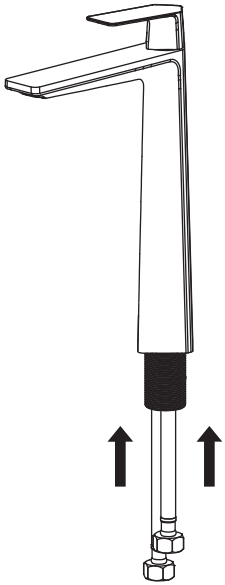

Place faucet on a soft cloth, spout facing up. Attach the waterlines into the base of the faucet (HAND-TIGHTEN ONLY)

(A) Hot side left

(B) Cold side right

NOTE: Make sure O-rings are installed on both ends of the hot & cold waterlines

Step 3: Install faucet

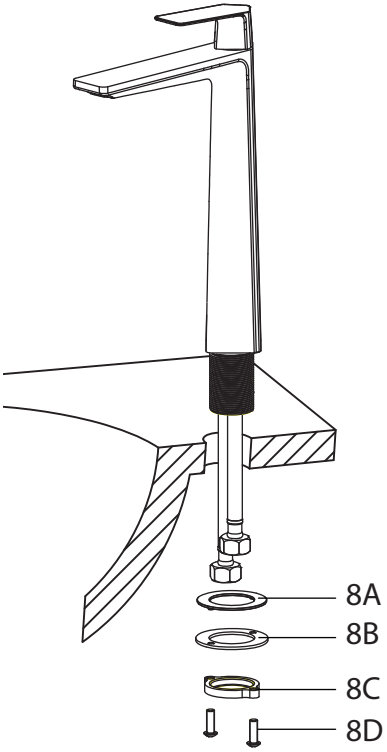

Install faucet through 1-3/8" predrilled hole in countertop. Attach rubber washer (8A), metal washer (8B), mounting nut (8C), and mounting screws (8D) on the threaded mounting pipe. Tighten mounting nut (8C) until snug. Tighten screws (8D) on mounting nut (8C) with Phillips head screwdriver until snug

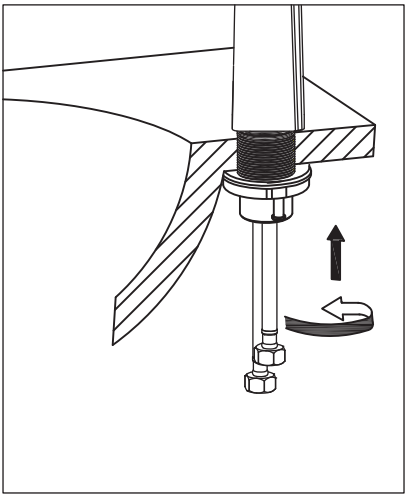

Step 4: Connect waterlines to main valve

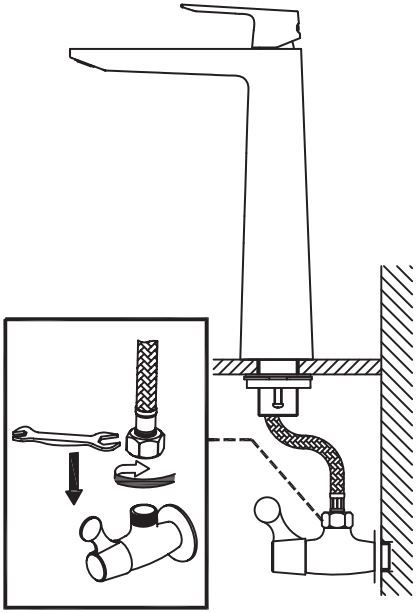

Connect flex water supply lines to angle stops and tighten with adjustable wrench. Turn on both hot and cold main valve

Apply pipe tape (optional)

Step 5: Flush faucet

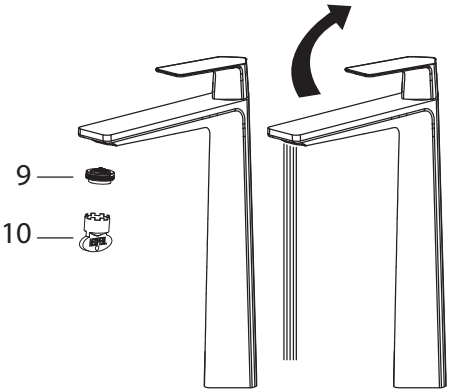

After installing faucet, remove aerator (9) with included aerator key (10). Turn water on for 30 seconds to remove any debris. Reassemble aerator (9)

Trouble - Shooting

If you have followed the instructions carefully and your faucet still does not work properly, take the following corrective steps:

PROBLEM	CAUSE	ACTION
Leakage under the handle	Locking nut (4) has come loose	Remove handle index button (1a). Loosen set screw (1b) with hex wrench (9). Remove metal handle (2). Unscrew cartridge cover (3) (by hand only). Tighten locking nut (4) with an adjustable wrench
Aerator drips or has inconsistent water flow pattern	Aerator (9) is dirty or not seated properly	Unscrew aerator (9) with aerator key (10) and clean out debris
Water will not shut off completely	Cartridge may need to be adjusted or replaced	Remove handle index button (1a). Loosen set screw (1b) with hex wrench (9). Remove metal handle (2). Unscrew cartridge cover (3) (by hand only). Unscrew the locking nut (4) with an adjustable wrench. Remove ceramic disc cartridge (5). Check for cracks

Care & Maintenance

*To keep the product clean & shining, follow the steps below:

1. Rinse with clean water & dry with a soft cloth
2. Do not clean with soaps, acid, polish, abrasives, or harsh cleaners
3. Do not use cloth with a coarse surface
4. Unscrew the aerator and clean when necessary

*This installation manual is subject to change without further notice.

Codes/Standards Applicable:

NSF/ANSI 372 GREEN LEAD FREE NSF/ANSI 61

ASME A112.18.1M
1.5GPM 5.7L/min maximum

KRAUS LIMITED LIFETIME WARRANTY

This product has been manufactured and tested to the highest quality standards by Kraus USA Inc. (“Kraus”). We offer our customers thoughtfully crafted fixtures & accessories, engineered for enduring performance over years of use.

WHO IS COVERED BY THE WARRANTY

This warranty extends to the original purchaser only. This warranty is not transferable, between homes or owners and is only applicable to residential use.

WHAT IS COVERED BY THE WARRANTY

Kraus warranties this product against defects due to material or craftsmanship error during the warranty period: Kraus will provide replacement parts at no charge, or at its option, replace any product or part of the product that is deemed defective, under normal installation, use, service and maintenance. If Kraus is unable to provide a replacement and repair is not practical or cannot be made in timely fashion, Kraus may elect to refund the purchase price in exchange for the return of the product.

CONDITIONS AND EXCLUSIONS

Like other home fixtures, Kraus products will require light maintenance to ensure proper function. We provide you with complete knowledge to perform this maintenance and can also recommend resources if you are unable to fulfill this service.

A. Kraus will not be responsible for product failures due to lack of maintenance or proper use. Please read your care and maintenance documentation to determine the limits of proper use.

B. The original sales receipt, order number, and/or proof of purchase must be presented at the time of the warranty claim, without exception, for this warranty to be applied to all Kraus products.

C. Kraus recommends installing all Kraus products with a licensed, professional plumber. Kraus will not be held responsible for any damage or product failure due to improper installation, misuse, or failure to use a licensed professional. Please read your care and maintenance documentation to determine the limits of proper use.

D. Commercial use will automatically void this warranty.

E. This warranty is not applicable to Kraus products purchased from an unauthorized seller. For a complete list of authorized sellers please visit http://www.kraususa.com/where-to-buy.html

NON-APPLICABILITY OF THIS WARRANTY

By the purchase and use of our products, you agree that Kraus is not liable for incidental, consequential or special damages associated with the return, replacement, installation or use of your product. This includes freight costs, cartridge replacement, labor, travel time, lost profit, home damages and other contingent liabilities and costs (including, without limitation, costs associated with experts, investigations, analyses, attorneys and other professionals and services). The Kraus warranty is a comprehensive and explicit limit of liability, and all items outside of it are not addressable by or the responsibility of Kraus. Certain states have variances regarding implied warranties and in those situations we remain fully compliant.

KRAUS USA Inc. makes no implication that products comply with any or all local building or plumbing codes. It is the consumer's responsibility to determine local code compliance. This warranty extends to the original purchaser and first consumer.

HELP LINE

For additional assistance at any point in the installation process, please call us at 1.800.775.0703 or email us at info@kraususa.com

Our customer service hours are Monday – Friday, 9am – 8pm EST.
Be sure to visit our website at www.kraususa.com

Kraus®

www.kraususa.com