Elavo™ Ceramic Sink Series | KCV-143

White Ceramic Round Vessel Bathroom Sink

Kraus®

SPECIFICATIONS SHEET

The round shape of this vessel sink complements a range of décor styles, from classic to contemporary. The naturally hygienic, non-porous surface is coated with a premium baked-on glaze, for an easy-to-clean high-gloss finish. Above-counter installation creates a stylish, modern look while maximizing available counter space. Pair this sink with a single-hole vessel faucet for a beautifully coordinated bathroom.

Product Features

- Easy Above-Counter Installation
- Durable & Scratch-Resistant Non-Porous Finish
- Easy-To-Clean Polished Surface
- Standard 1.75” Drain Opening
- Coordinates w/ Most Vessel Faucets
- Sink Dimensions: 16.3” x 5.5”
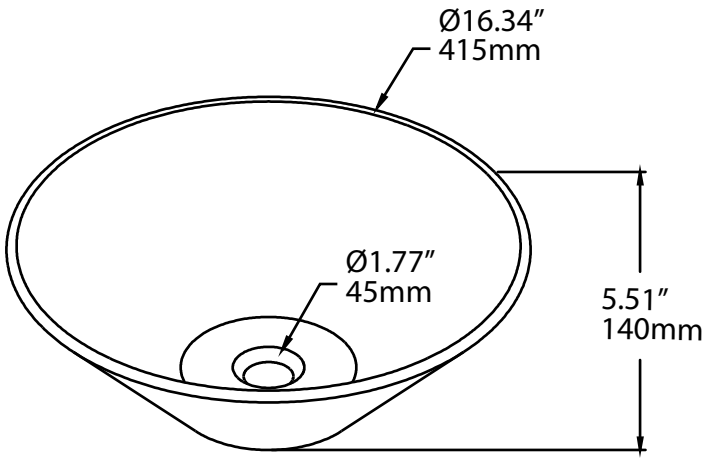
Warranty: Limited lifetime warranty against leaks, drips, and finish flaws to the original purchaser and first consumer. This warranty is applicable to residential use only. Commercial use will automatically void the warranty.