Kräus®

INSTALLATION MANUAL

Elavo™ White Ceramic Flared Rectangular Undermount Bathroom Sink w/ Overflow

KCU-261

 © 2014-2015 Kraus USA Inc.

Thank you for purchasing Kraus

We would like to take this opportunity to thank you for your business with Kraus USA. It is our sincere hope that you are completely satisfied with your experience. We welcome any questions or comments you may have, and will be glad to assist you in the future.

For more information about Kraus products, please visit our website at:

www.kraususa.com

Please register your new Kraus product at the following web address in order to activate the warranty and receive the full benefit of customer support:

www.kraususa.com/registration

Sincerely,

Kraus Customer Service Department

Prior to Installation:

- Make sure that you have all necessary parts by checking the parts list. If any part is missing or damaged, please contact Kraus Customer Service at 800-775-0703 for a replacement.
- Inspect the sink prior to installation to make sure it has not been cracked or chipped during shipping
- Use the cut-out template provided by Kraus
- Observe all plumbing and building codes according to your state requirements
- Additional floor and wall preparation may be required to avoid damaging the sink

WARNING: This product is fragile and can break, chip, or cause injury if handled recklessly. Please consult with a professional when installing

Tools you will need:

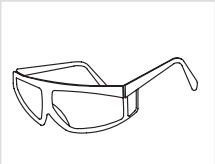

Safety Goggles

Drill

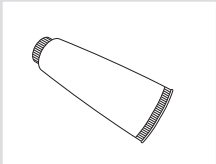

Silicone Adhesive

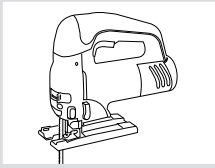

Jig Saw

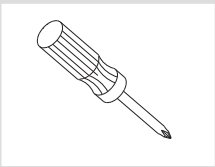

Phillips Screwdriver

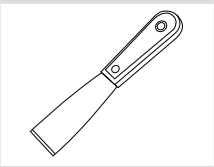

Putty Knife

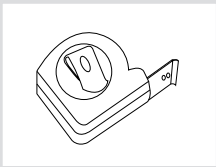

Tape Measure

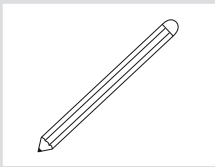

Pencil

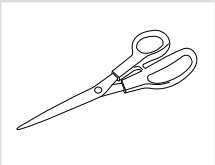

Scissors

Screwdriver

NOTE: Specialized tools may be necessary to install Kraus Ceramic Undermount sinks with countertop materials other than wood, marble, or granite

Parts List (Included)

- Cut-Out Template
- Mounting Hardware

Dimensions

23.6″ L x 17.3″ W x 5.7″ H

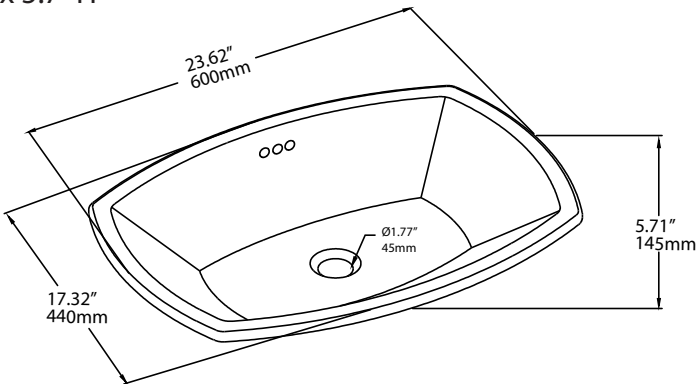

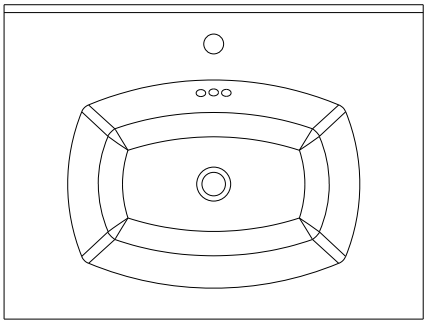

Top View

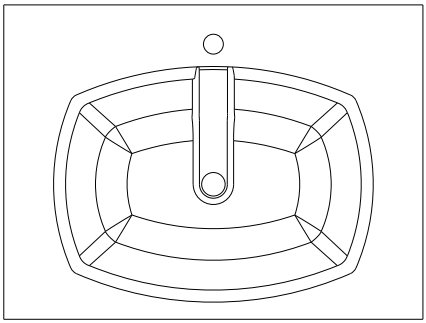

Bottom View

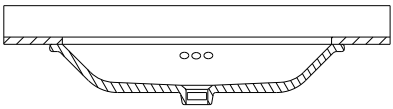

Front View

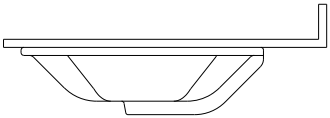

Side View

1. Cut paper template

- Use scissors to cut along the inside line of the paper template

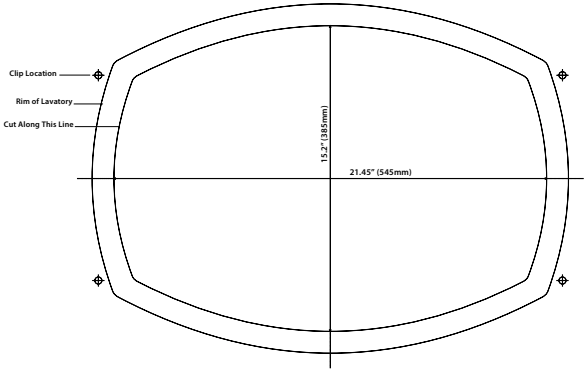

2. Trace template

- Compare cut template with sink to ensure proper size
- Place the cut-out template in the desired location on the countertop and trace with a pencil
- Mark the faucet hole centerline on the countertop using the vertical line in the center of the paper template

NOTE: Make sure clearance is suitable for backsplash, faucet, and plumbing for the sink

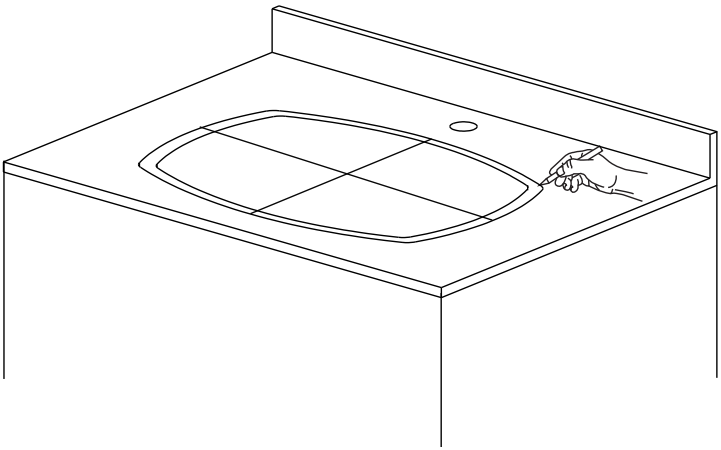

3. Cut countertop

- Cut the countertop opening by carefully following the pencil line traced from the template

NOTE: Please use the appropriate saw that best fits your countertop material

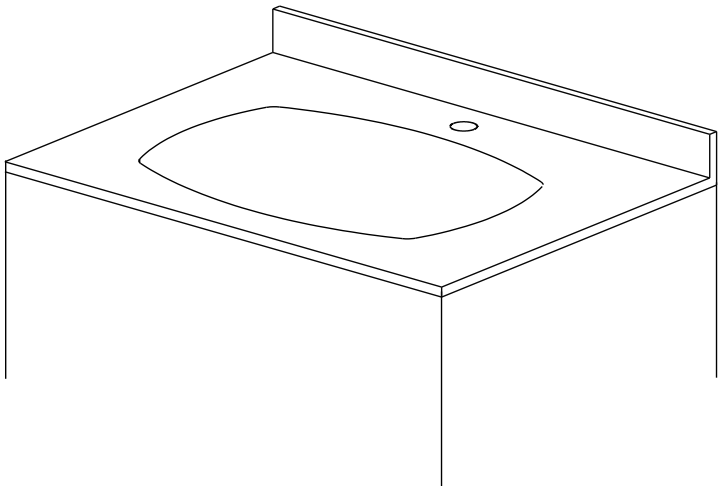

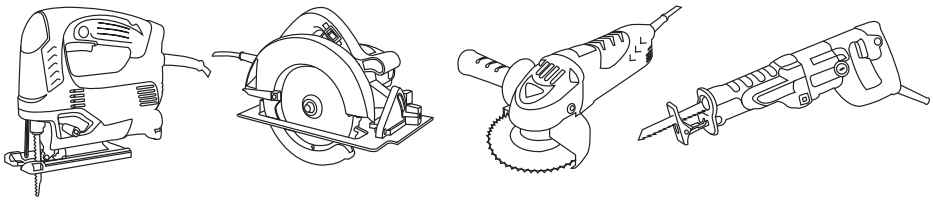

4. Install anchors

- Flip countertop over and place on a foam pad for protection. Use cutout template to mark the anchor placement on the countertop. Drill 5/16" diameter x 3/8" deep hole in countertop
- Place epoxy in the drilled hole. Insert brass nut anchors into the drilled hole and wait until the epoxy cures

NOTE:

- Please check epoxy directions for curing time
- Please tap brass nut anchors lightly with hammer

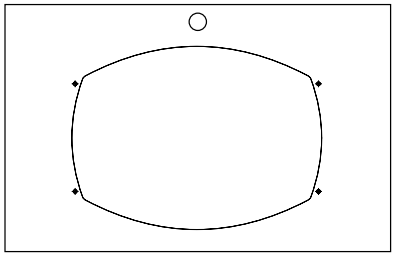

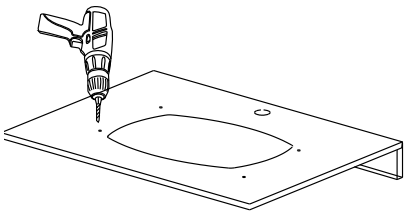

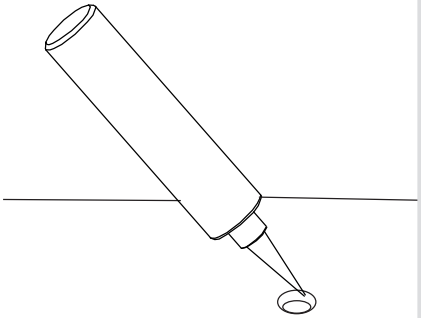

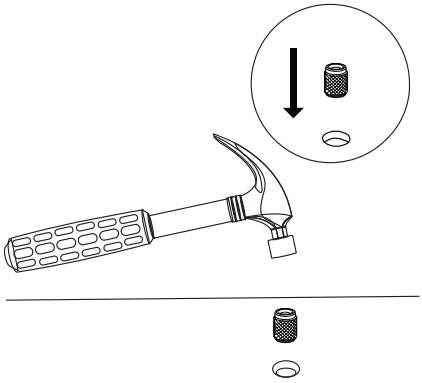

5. Install sink

- Use a bead of clear silicone (or preferred adhesive) around the rim of the sink. Check the alignment of the sink to the opening in the countertop. Place sink over cutout hole and press firmly
- Attach mounting hardware to secure bowl. Remove excess sealant from inside lip
- Allow sealant to set for 30 – 60 minutes

NOTE: Use acetone or rubbing alcohol to remove any excess sealant

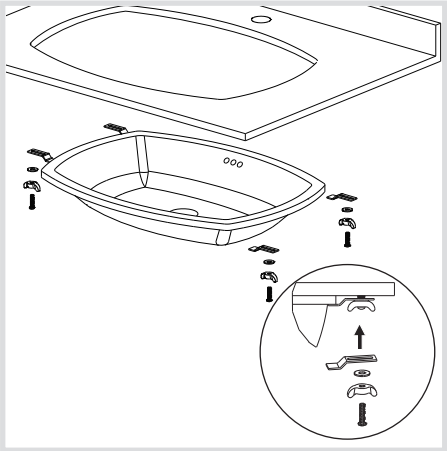

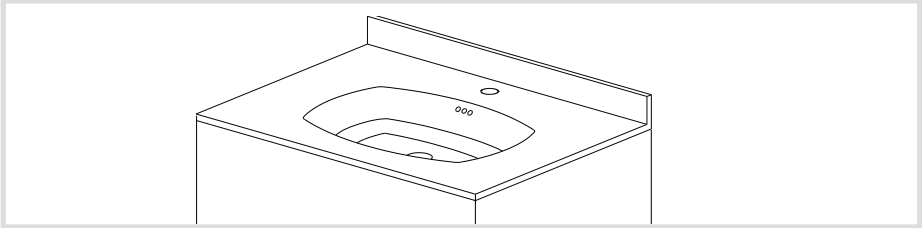

6. Install plumbing fixtures

- Connect drain to sink. Connect trap to drain. Connect water supply connections to faucet according to manufacturer's instructions
- Run water into sink and check for leaks

Codes/Standards Applicable:

KRAUS LIMITED LIFETIME WARRANTY

This product has been manufactured and tested to the highest quality standards by Kraus USA Inc. ("Kraus"). We offer our customers thoughtfully crafted fixtures & accessories, engineered for enduring performance over years of use.

WHO IS COVERED BY THE WARRANTY

This warranty extends to the original purchaser only. This warranty is not transferable, between homes or owners and is only applicable to residential use.

WHAT IS COVERED BY THE WARRANTY

Kraus warranties this product against defects due to material or craftsmanship error during the warranty period: Kraus will provide replacement parts at no charge, or at its option, replace any product or part of the product that is deemed defective, under normal installation, use, service and maintenance. If Kraus is unable to provide a replacement and repair is not practical or cannot be made in timely fashion, Kraus may elect to refund the purchase price in exchange for the return of the product.

CONDITIONS AND EXCLUSIONS

Like other home fixtures, Kraus products will require light maintenance to ensure proper function. We provide you with complete knowledge to perform this maintenance and can also recommend resources if you are unable to fulfill this service.

A. Kraus will not be responsible for product failures due to lack of maintenance or proper use. Please read your care and maintenance documentation to determine the limits of proper use.

B. The original sales receipt, order number, and/or proof of purchase must be presented at the time of the warranty claim, without exception, for this warranty to be applied to all Kraus products.

C. Kraus recommends installing all Kraus products with a licensed, professional plumber. Kraus will not be held responsible for any damage or product failure due to improper installation, misuse, or failure to use a licensed professional. Please read your care and maintenance documentation to determine the limits of proper use.

D. Commercial use will automatically void this warranty.

E. This warranty is not applicable to Kraus products purchased from an unauthorized seller. For a complete list of authorized sellers please visit http://www.kraususa.com/where-to-buy.html

NON-APPLICABILITY OF THIS WARRANTY

By the purchase and use of our products, you agree that Kraus is not liable for incidental, consequential or special damages associated with the return, replacement, installation or use of your product. This includes freight costs, cartridge replacement, labor, travel time, lost profit, home damages and other contingent liabilities and costs (including, without limitation, costs associated with experts, investigations, analyses, attorneys and other professionals and services). The Kraus warranty is a comprehensive and explicit limit of liability, and all items outside of it are not addressable by or the responsibility of Kraus. Certain states have variances regarding implied warranties and in those situations we remain fully compliant.

KRAUS USA Inc. makes no implication that products comply with any or all local building or plumbing codes. It is the consumer's responsibility to determine local code compliance. This warranty extends to the original purchaser and first consumer.

HELP LINE

Our customer service hours are Monday – Friday, 9am – 8pm EST.
Be sure to visit our website at www.kraususa.com

If you are a homeowner please contact a Kraus Customer Service Representative at:

Kraus USA, Inc.
12 Harbor Park Drive
Port Washington, NY 11050
Toll-free 800-775-0703
Customerservice@kraususa.com

If you are a plumbing contractor or trade professional please contact a Kraus Pro Representative at:

Kraus USA, Inc.
12 Harbor Park Drive
Port Washington, NY 11050
516-801-8955
Proservice@kraususa.com

If you are an Authorized Partner please contact a Partner Support Representative at:

Kraus USA, Inc.
12 Harbor Park Drive
Port Washington, NY 11050
516-801-8954
Partnersupport@kraususa.com

In requesting warranty service, please be ready to provide:

1. Proof of purchase.
2. A description of the problem.

Kraus®

www.kraususa.com