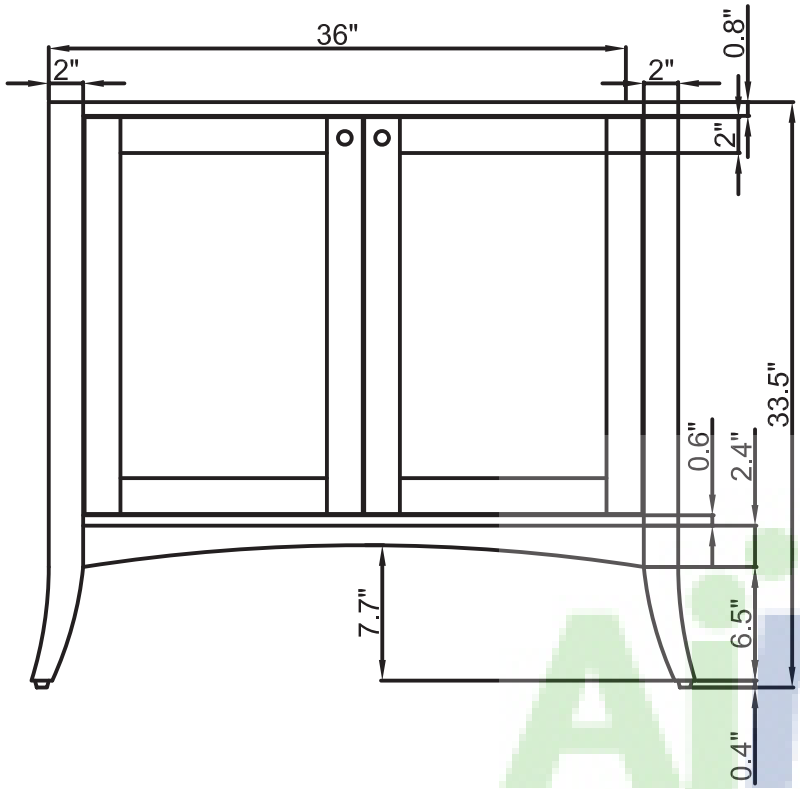

FRONT VIEW

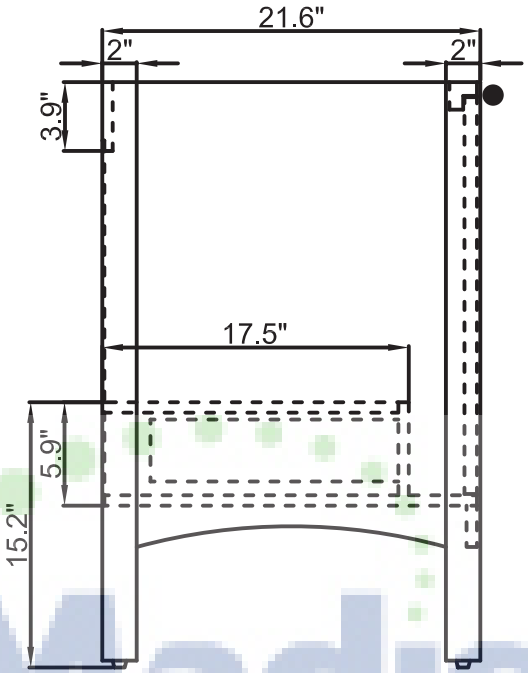

SIDE VIEW

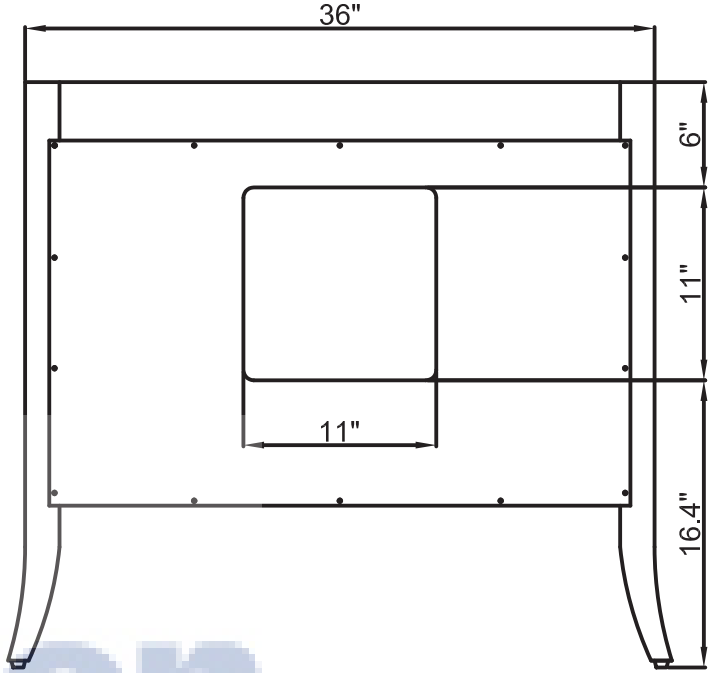

BACK VIEW

AJMadison
Your Appliance Authority™
800-570-3355

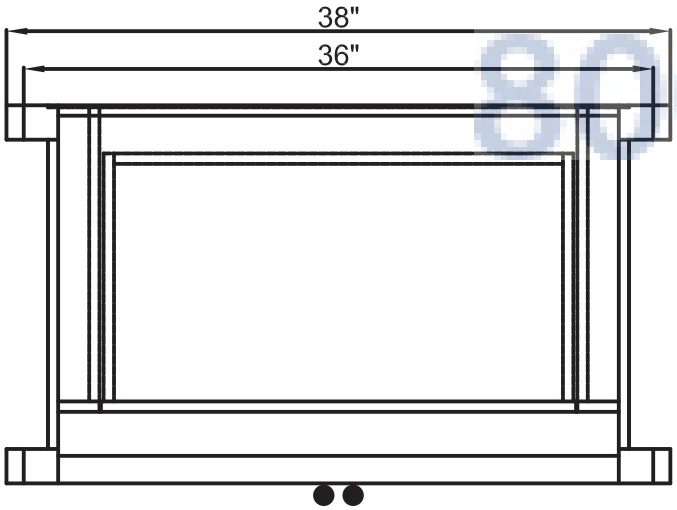

TOP VIEW

EMPRESS 36"