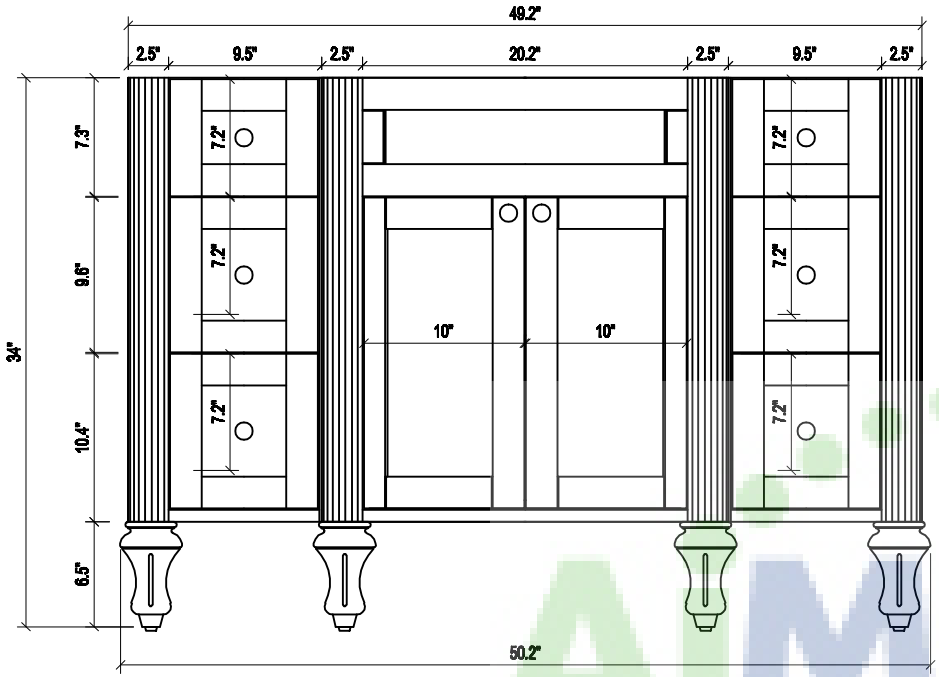

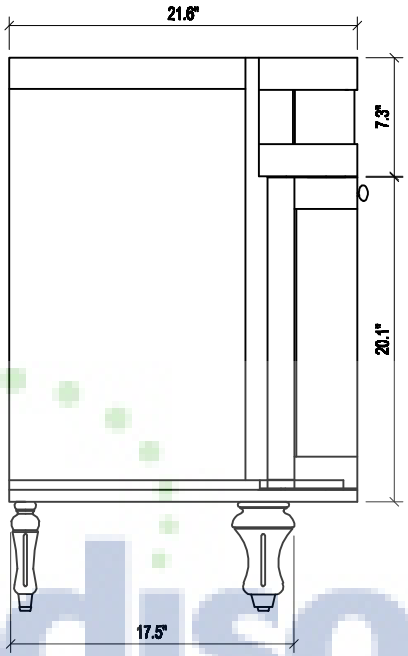

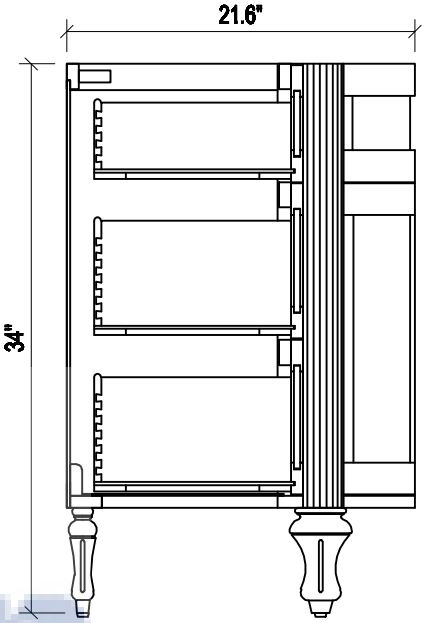

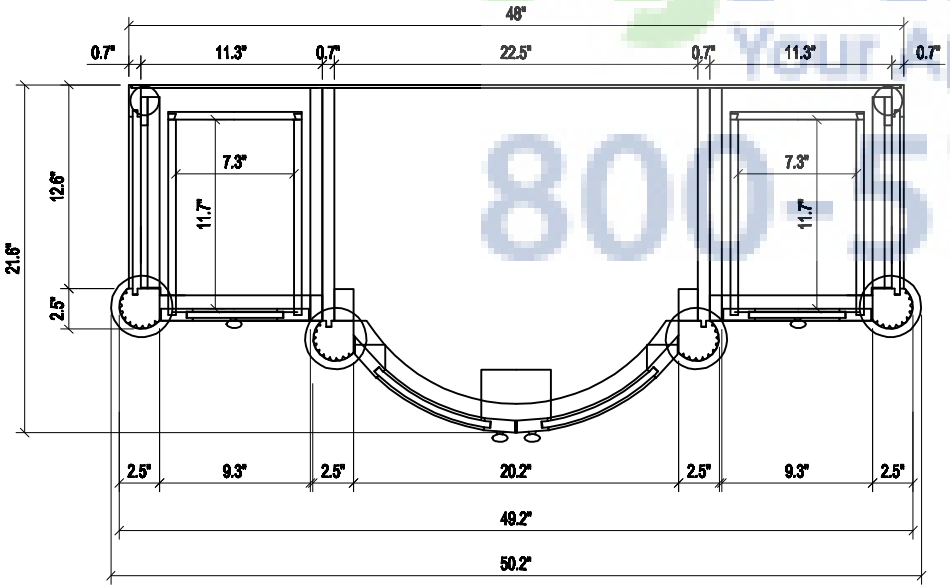

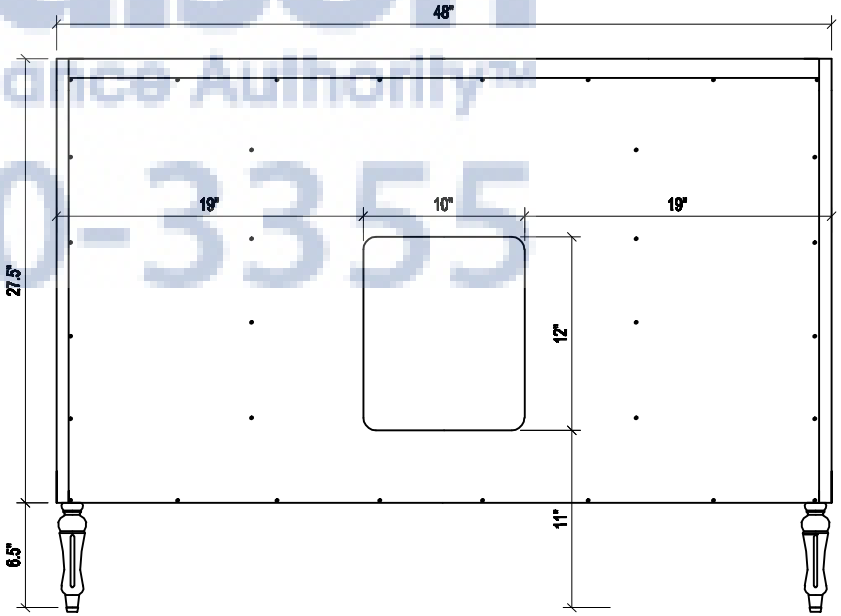

Dona48 (D49)

AJ Madison
Your Appliance Authority™
800-570-3355