Monogram® 1.2 Cu. Ft. Drawer Microwave ZWL1126JSS

SPECIFICATIONS

Overall Width	23 7/8" (60.6 cm)
Overall Height	15 15/16" (40.5 cm)
Overall Depth	23 1/8" (58.8 cm)
Oven Door Clearance	15" (38.1 cm) Min
Overall Oven Interior Capacity	1.2 cu. ft. (.02 cu. cm)
Oven Interior Dimensions (W x H x D)	16 1/4" x 7 1/4" x 16 1/4" (41.3 cm x 18.4 cm x 41.3cm)
Minimum Cabinet Width*	22" (55.9 cm)
Minimum Cabinet Depth*	23 1/2" (59.7 cm)
Minimum Base Support	110 lbs (49.9 kg)
Cutout Width*	24 3/16" (61.4 cm) Min
Cutout Height*	15 9/16" (395 cm) Min
Cutout Depth*	23 1/2" (59.7 cm) Min
Voltz/Hertz/Amps	120 VAC, 60 Hz
Cord Length	47 1/4" (119.4 cm)
Electrical Rating	1.67 kw@120v
Total Amps	15
Shipping Weight	90 lbs (39.4 kg)

* Additional space will be needed for flush installation.

ATTENTION ELECTRICIAN:

A 240/208V, 60Hz, 20 Amp circuit is required. An individual properly grounded branch circuit or circuit breaker is required. Hard wired junction box is required for built-in product.

OVERALL DIMENSIONS

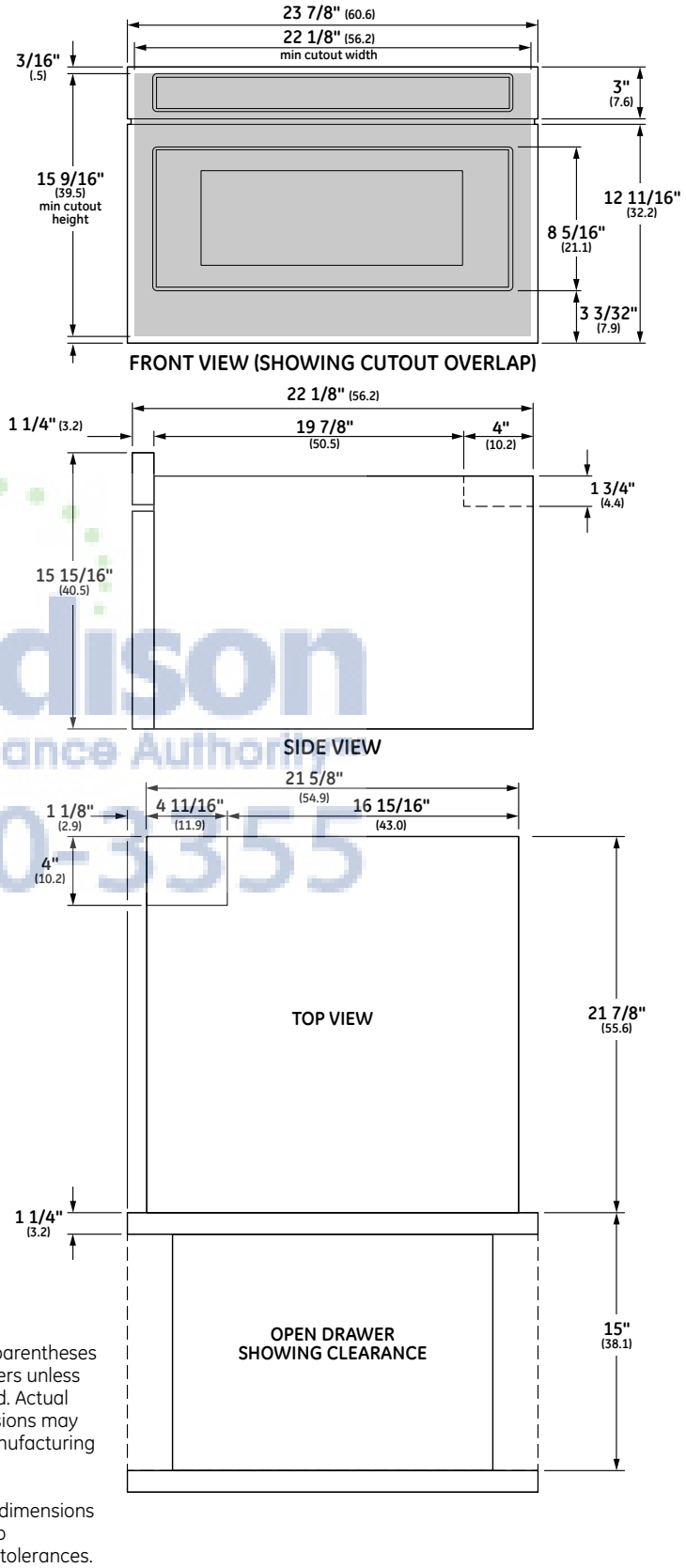

Dimensions in parentheses are in centimeters unless otherwise noted. Actual product dimensions may vary due to manufacturing tolerances.

Actual product dimensions may vary due to manufacturing tolerances.

AJ Madison
Your Appliance Authority
800-570-3355

WALL INSTALLATION

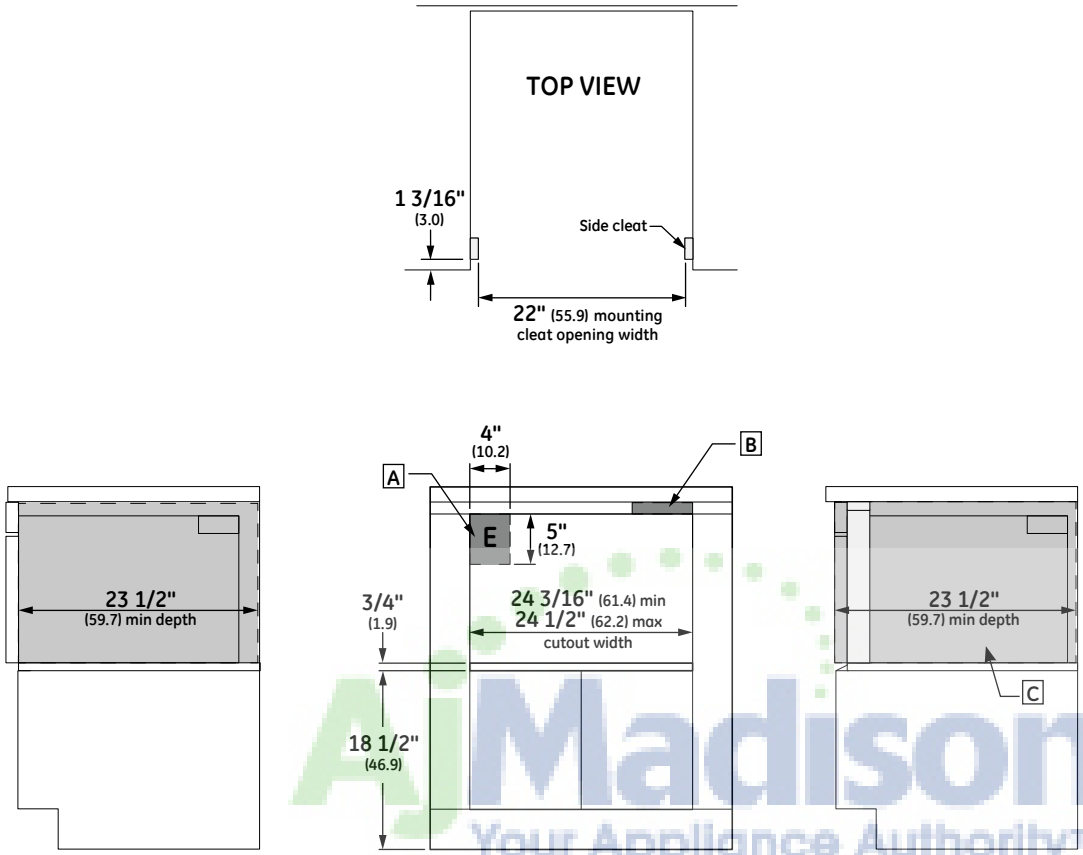

AJ Madison
Your Appliance Authority™
800-570-3355

NOTES

A Junction box location (May also be located in adjacent cabinet.)

B To reduce the risk of tipping of the drawer, the Anti-Tip block must be properly installed located 14 13/16-inches above the floor on which the Microwave Drawer will sit. The 6-inch Anti-Tip block must be provided by the installer. The Anti-Tip block prevents serious injury that might result from spilled hot liquids.

C Cleats may be visible and should be finished to match cabinetry.

For more details, refer to the installation instructions for this product on Monogram.com.
Dimensions in parentheses are in centimeters unless otherwise noted.

Monogram® 1.2 Cu. Ft. Drawer Microwave ZWL1126JSS

FEATURES AND BENEFITS

Sophisticated styling - Offers a look of modern refinement that blends beautifully with both European and Professional styles.

1.2-cu.-ft. capacity - Accommodates large plates and cookware with ease.

Flush installation capability - Enables the drawer to be installed flush with cabinetry without any additional parts.

Glass touch control with white LED display - Makes it easy to adjust settings and adds to the drawer's sleek, streamlined appearance.

10 cooking modes, including Melt, Soften, and Keep Warm - Provide cooking convenience and flexibility.

900 Watts - Cooking power delivers rapid, even heat.

Sensor cooking - Automatically adjusts time and power settings for optimal results.

Quickstart option - Allows you to add 60 seconds of cooking time with a simple touch

Control lock feature - Prevents unwanted use for extra peace of mind.

Installation flexibility - Allows the drawer to fit unobtrusively under a standard 24-in.-width cabinet.

Easy access options - Allow you to open and close the drawer with the push of a button or by gently pulling or pushing the recessed handle.

AJMadison
Your Appliance Authority™
800-570-3355