# PARAMOUNT DESIGNER RANGE SERIES (SDRBS)

**48 in. 6.7 cu. ft. Dual Fuel Range with 8-Burner Gas Cooktop and Electric Double Oven**

ZLINE
ATTAINABLE LUXURY®

**SDRBSZ-48-MBCB**

Black Satin Stainless Steel





Black Satin Stainless Steel Range Base Finish



Champagne Bronze Knob Rings and Matte Black Knobs

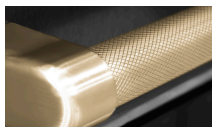

Champagne Bronze Helix Handles

## GENERAL PROPERTIES

| | |
|---|---|
| SKUs | SDRBSZ-48-MBCB |
| Base Finish | Black Satin Stainless Steel |
| Accent Finish | Matte Black and Champagne Bronze |
| Fuel Type | Convection Electric Oven-Gas Cooktop |
| Burners | 8 Brass Burners |
| Mount Type | Free Standing |
| Timer | No |
| Material | 430 Grade Stainless Steel |
| Grates | Modern |
| Certification | ETL Certified |

## DIMENSIONS AND WEIGHT

| | |
|---|---|
| Product Dimensions | 47 7/8" W x 27 3/4" D x 36" H |
| Cutout Dimensions | 48 1/8" W x 24 3/4" D x 36" H |
| Product Weight | 419 lb (190.05 kg) |

## COOKTOP FEATURES

| | |
|---|---|
| Cooktop | Porcelain With Electronic Spark Ignition For All Burners |

## COOKTOP BTU (Electronic Ignition and Auto Re-ignition)

| | |
|---|---|
| Back Left: (Semi-Rapid) | 9,000 BTU |
| Back Right: (Rapid) | 12,000 BTU |
| Back Right (Middle: Semi-Rapid) | 9,000 BTU |
| Back Left (Middle (Rapid) | 12,000 BTU |
| Front Left: (Auxiliary) | 6,000 BTU |
| Front Middle: (Dual) | 20,000 BTU |
| Front Right: (Dual) | 20,000 BTU |
| Front Right (Middle: Auxiliary) | 6,000 BTU |

## FEATURES AND BENEFITS

**Italian-Made Auto Re-ignition Burners:** 8 Italian-made gas burners utilize automatic re-ignition innovation for improved temperature control and cooktop safety.
**Horizon Oven Windows:** Keep a watchful eye on your baking dishes through ZLINE's Horizon oven door design that features 2 large viewing windows.
**Powerful Convection Cooking:** Handle multiple bakes with ease with a high-speed and high-wattage convection fan that maintains precise heat distribution inside the large oven.
**Dual Function Burners:** 2 Dual Function Burners allow you to simmer at 800 BTU or perfectly sear at 20,000 BTU.
**Dual Fuel Flexibility:** Enjoy the benefits of dual fuel cooking with a high-powered gas cooktop and 2 electric ovens with high-grade heating elements that ensure consistent temperature ranges.
**Large Oven Capacity:** An expansive oven capacity of 6.7 cu. ft. fits pans up to 20 in. wide in the larger oven and 10 in. wide in the smaller oven for maximum space and convenience.
**Premium Oven Insulation:** A 3-layered glass door on both ovens with large viewing windows and aluminum mesh seals offer superior heat retention and consistent temperatures.
**Smooth Glide Ball-Bearing Oven Racks:** 4 durable ball bearing racks, 2 inside each oven, provide extra convenience and ease when working with larger dishes.
**LP Conversion Kit:** Comes equipped with an LP conversion kit to convert from natural gas to liquid propane (must be done by a professional), offering versatility with your cooking preference.

## OVEN FEATURES

| | |
|---|---|
| (Lg) Oven Interior Dimensions | 24 7/8" W × 17 3/4" D × 16" H |
| (Sm) Oven Interior Dimensions | 13 3/8" W x 17 3/4" D x 16" H |
| Self-Clean | No |
| Oven Lighting | (3) Halogen |
| Oven Features | Bake, Broil, Convection Bake |
| Convection Fan | Yes (Large Oven Only) |
| Number of Racks | 4 |
| Child Lock | No |

## OVEN WATTAGE

| | |
|---|---|
| (Lg) Broil Output | 4200 W |
| (Lg) Bake Output | 3000 W |
| (Sm) Oven Bake / Broil Output | Bake 1600 W / Broil 2000 W |

## ELECTRICAL REQUIREMENTS

240 V / 60 Hz / 35 A Dedicated Circuit

## WARRANTY

**Manufacturing Warranty:** 1-year parts and labor.
**Italian Burners and Spark Tips:** Limited Lifetime Warranty.
*Limited Lifetime includes: parts replacements for burners, burner caps, and parts and labor for the spark tip if parts prove to be defective in materials or workmanship.*

**Appliance protection plans sold separately, contact for more information.*

# PARAMOUNT DESIGNER RANGE SERIES (SDR)

**48 in. 6.7 cu. ft. Dual Fuel Range with 8-Burner Gas Cooktop and Electric Double Oven**

ZLINE
ATTAINABLE LUXURY®

**FRONT VIEW**

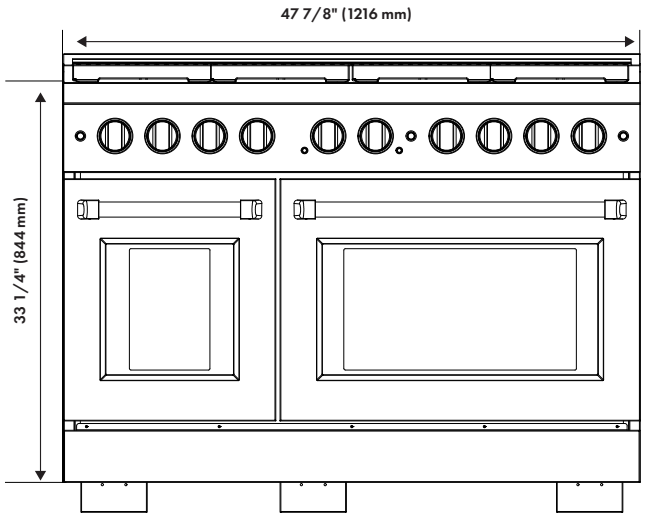


**BACK VIEW**

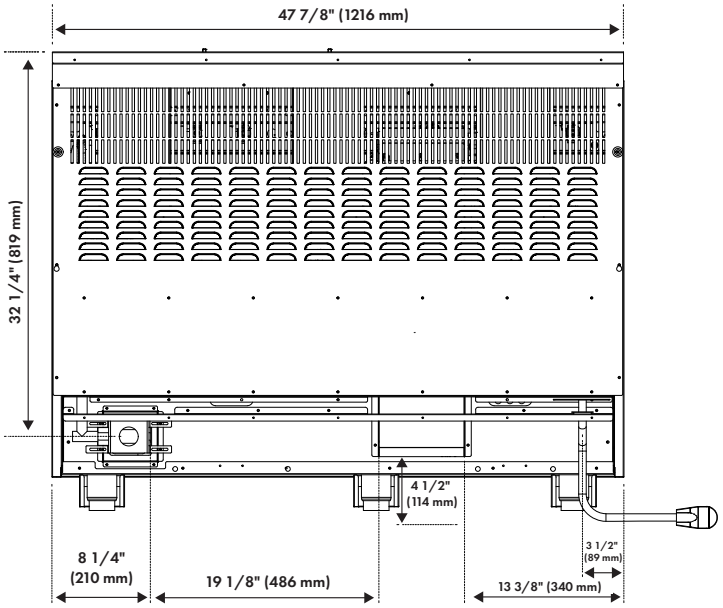


## INSTALLATION RESOURCES

| | |
|---|---|
| Installation / User Manual | Click Here |

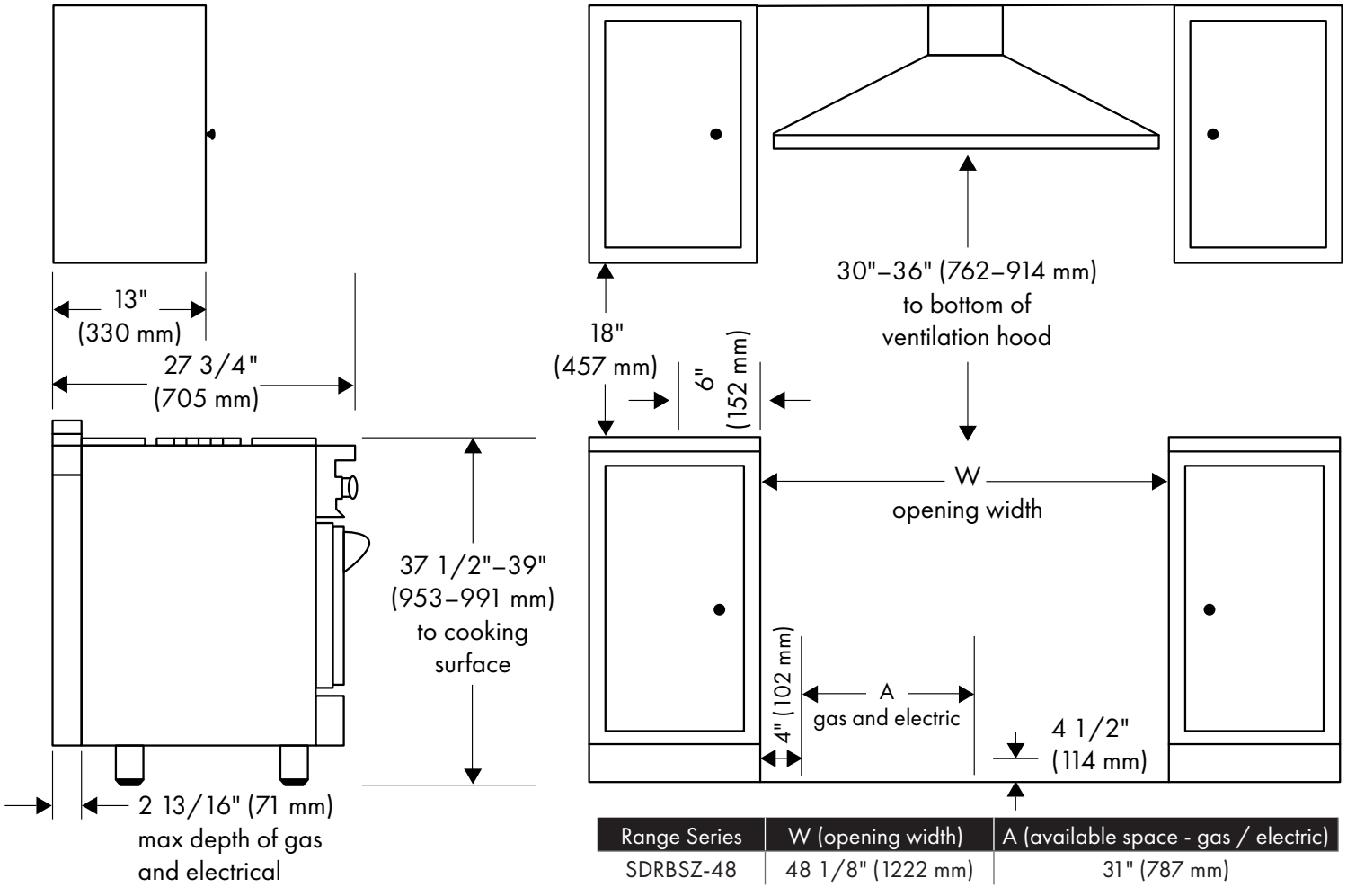


| Range Series | W (opening width) | A (available space - gas / electric) |
|---|---|---|
| SDRBSZ-48 | 48 1/8" (1222 mm) | 31" (787 mm) |

# ZLINE KITCHEN ACCESSORIES

## Range + Kitchen Compatible Accessories

ZLINE
ATTAINABLE LUXURY®

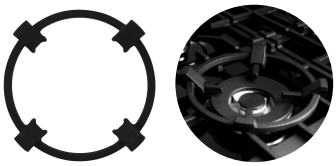

Cooktop Wok Ring | RA-005A




Cleaner/Polish | STCLT-8



Reversible Cast Iron Griddle | SR-GRNS



German Steel
15 Piece Knife Set | KSETT-GS-15



German Steel
3 Piece Knife Set | KSETT-GS-3



Japanese Damascus
3 Piece Knife Set | KSETT-JD-3




10-Piece
Stainless Steel
Cookware Set | CWSETL-ST-10




10-Piece Stainless
Steel and Ceramic
Cookware Set | CWSETL-NS-10




5-Piece Black
Matte Enameled
Cast Iron Set | CWSETS-BLM-5




5-Piece White
Matte Enameled
Cast Iron Set | CWSETS-WM-5

## CONTACT INFORMATION

### PHONE

**Customer Service**
1-614-777-5004

**Dealer Assistance**
1-833-597-2461

### HOURS OF OPERATION

**Customer Service**
Monday–Friday 6:00am–4:30pm CST

**Dealer Assistance**
Monday–Friday 7:00am–4:00pm CST

### EMAIL

**Customer Service**
contact@zlinekitchen.com

**Dealer Assistance**
dealer@zlinekitchen.com

© 2026 ZLINE Kitchen and Bath, LLC. All rights reserved. ZLINE reserves the right to make changes at any time to its products, designs, specifications and/or features without notice.
No part of this document may be reproduced, distributed, or used in any form without the express written permission of ZLINE.