GE Monogram® 18" Dishwasher

Model# ZBD1850NII

- Custom Panel Model - Designed for personalization with customer-supplied cabinet-compatible panel and custom handle
- Hidden, Integrated Electronic Controls - Allow easy activation of wash cycles: heavy wash, normal wash, light wash, china and rinse only
- Five-Level Wash System - Provides effective, yet quiet cleaning power
- ENERGY STAR® Qualification - As an ENERGY STAR® partner, GE has determined that the Monogram® 18" dishwasher meets the ENERGY STAR guidelines for energy efficiency and water conservation
- Pearlescent Gray, Nylon-Coated Racks with Ball-Tipped Tines - Provide plenty of space and loading flexibility
- StemSafe™ Shelf - Allows for odd-shaped items and delicate stemware

FEATURES

Exterior Style	18" Wide Compact
Door Style	Fully integrated door for custom panels
Energy Star® Qualified	Yes
Control Type	Fully Integrated Electronic Light Touch
Dual Pumps and Motors	Yes
Wash Arm - Lower Level	Yes
Wash Arm - Mid-Level	Yes
Wash Arm - Upper Level	Nozzle
Wash Levels	5
Wash System	Standard
Water Filtration System	Lift Out
Cycles / Options	7/1
Glasses	Yes
Heavy Wash	Yes
Light Wash	Yes
Normal Wash	Yes
Rinse Only	Yes
SpeedWash™	Yes
Air Dry	Yes
Delay Start	1-24 Hr. with LED
Start / Cancel / Reset Pad	Yes
Ball Tipped Tines	Yes
Lower Rack	Nylon with 4 StemSafe
Racking System	Nylon Towerless
Silverware Basket	Standard
Upper Rack	Nylon with Ball Tines and Bowl Tines
Utility Shelf	2 Plastic with StemSafe
Cycle Progress Indicators	LED
Pushbuttons	3
120 ° Inlet Water Capability	Yes
Calrod Heater	Yes
Drain Hose	Yes
Latch	Center Pull
Leveling Screws	Yes
Rinse Aid Dispenser	With Indicator, Adjustment and LED

To locate a GE Monogram dealer, call 1-800-626-2000

GE Monogram® 18" Dishwasher

Model# ZBD1850NII

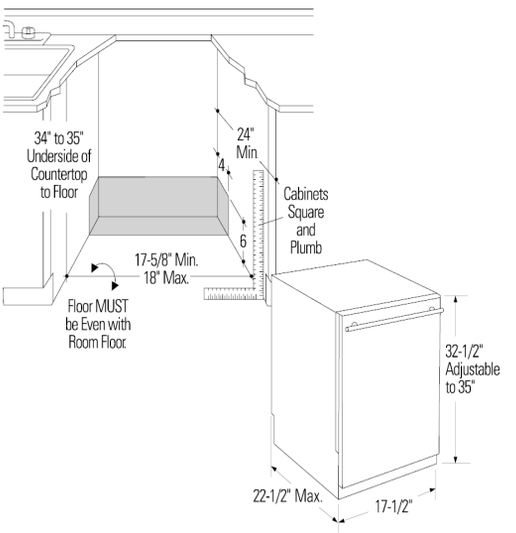

APPROXIMATE DIMENTIONS (HxDxW)

- **32 in x 24 in x 18 in**

WARRANTY

- **Parts Warranty - Limited 1-year entire appliance**
- **Labor Warranty - Limited 1-year entire appliance**
- **Warranty Notes - See written warranty for full details**

To locate a GE Monogram dealer, call 1-800-626-2000