GB INSTRUCTIONS BOOKLET

A WARNINGS

This instruction booklet must be kept together with the appliance for future reference. If the appliance is sold or consigned to other parties, check that the booklet is supplied with it, to ensure that the new user has the correct information on the operation of the range hood and is aware of the warnings. These warnings have been provided for the your safety and the safety of others. As a result, please read them carefully before installing and operating the appliance.

This appliance is not intended for use by young children or infirm persons unless they have been adequately supervised by a responsible person to ensure that they can use the appliance safely. Young children should be supervised to ensure they do not play with the appliance.

The appliance must be installed by qualified personnel, in accordance with the standards in force. If the supply cord is damaged, it must be re-placed by the manufacturer, its service agent or similarly qualified persons in order to avoid a hazard. Any modifications that may be required to the electrical system for the installation of the range hood must only be made by qualified electricians.

It is dangerous to modify or attempt to modify the characteristics of this system. In the event of malfunctions or if repairs are required to the appliance, do not attempt to solve the problems directly.

Repairs performed by unqualified persons may cause damage. For all repair and other work on the appliance, contact an authorised service/spare parts centre.

Always check that all the electrical parts (lights, exhaust device), are off when the appliance is not being used. Read the entire instruction booklet before performing any operations on the range hood.

The range hood must only be used for the exhaust of cooking fumes in home kitchens. The manufacturer disclaims all liability for any other use of the appliance.

The maximum weight of any object placed above the hood, or hung to it (if possible) must not exceed 1,5 kilos. After installing the stainless steel hood, clean it in order to remove any residue of the protective glue, and stains of grease or oil. The manufacturer recommends its cleaning cloth available for purchase. The manufacturer accepts no liability in case of damage caused by the use of different detergent types.

Madison
Your Appliance Advisor
800 570 3355

B TECHNICAL SPECIFICATIONS

The technical data pertaining to the electric appliance The technical specifications of the appliance are shown on the rating plates located inside the range hood.

C INSTALLATION

(Section reserved for qualified installers of the range hood)

Minimum distance: distance between the pan supports of the cooker and the bottom-most section of the hood. When the hood is positioned above a gas equipment this minimum distance must be at least 65 cm (see pictures) or even more, if this is specified in the instructions for use of the gas cooker.
In the outside exhaust version, the diameter of the fume discharge duct must be no smaller than the range hood connection.
In the horizontal sections, the duct must slope slightly (around 10%) upwards, so as to better convey the air outside of the room.
Avoid using angled pipes, make sure that the pipes are at least of the minimum length.
Comply with the current regulations on air discharge into the atmosphere.
If a boiler, stove, fireplace, etc. that uses gas or other fuels is being used at the same time, make sure the room where the fumes are extracted is well ventilated, in compliance with the current regulations.
Mounting instruction: see section "O" of the booklet.

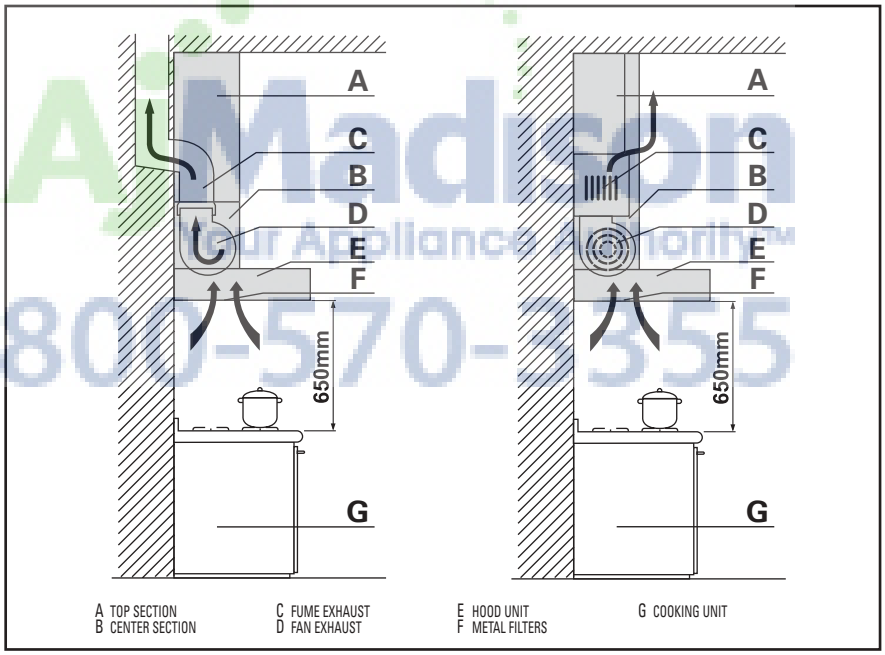

AjMadison
Your Appliance Authority
800-570-9355

D ELECTRICAL CONNECTIONS

(Section reserved for qualified installers)

WARNING!
Before doing any work inside the range hood, disconnect the appliance from

the mains power supply.
Check that the wires inside the range hood are not disconnected or cut; if this is the case, contact your nearest service centre. The electrical connections must be performed by qualified personnel.

The connections must be performed in compliance with the legal standards in force. Check that the relief valve and the electrical system are able to support the load of the appliance (see the technical specifications in point B).
Some types of appliance are supplied with a cable without plug; in this case, "standardised" plugs must be used, keeping in mind that:
- the yellow-green wire must be used for the earth,
- the blue wire must be used for the neutral,
- the brown wire must be used for the phase; the cable must not come into contact with hot parts (over 75°C).
- fit a plug that is suitable for the load to the power cable, and connect it to a suitable power outlet.

For appliances that come supplied with cable and plug please ensure they are plugged into a circuit suitable for this appliance.
Please refer to a qualifed person. (See technical specifications in point B).

The manufacturer declines all liability if the safety standards are not observed.

E RANGE HOOD WITH OUTSIDE DISCHARGE (exhaust)

In this version, the fumes and steam from the kitchen are conveyed outside through an exhaust duct.
The exhaust conveyor that protrudes from the upper part of the range hood must be connected to a duct that carries the fumes and steam outside. In this version, the charcoal filters, if fitted, should be removed; to do this, see the instructions in point F. There must be adequate ventilation of the room when the range hood is used at the same time as appliances burning gas or other fuels, according to the standard.

Deviation for Germany:
When the range hood and appliances supplied with energy other than electricity are simultaneously in operation, the negative pressure in the room must not exceed 4 Pa (4x10 E-5 bar).

F RECIRCULATING RANGE HOOD (with filter)

In this version, the air passes through charcoal filters for purification, and is then recirculated back into the kitchen.
Check that the charcoal filters are fitted to the motor, and if not, install them as described in the instructions in point H.
If the hood is of filtering type, remove the non-return valve fitted at the motor's outlet.

Madison Your Appliance Authority™ 800-672-3365

For maximum efficiency, the third speed should be used when there are strong odours or a lot of steam, the second speed in normal conditions, and the first speed for keeping the air clean with minimum energy consumption. The range hood should be switched on when starting to cook, and left on until the odours disappear.

G OPERATION

1. TWO BUTTON CONTROL PANEL

LIGHT - Switch A
Position 0: the light is off.
Position 1: the light is on.

SPEED - Switch B
This is used to start and set the speed of the motor, from 1 to 3, or with continuous speed variator, depending on the version.

LIGHT - C
Motor operation indicator light.

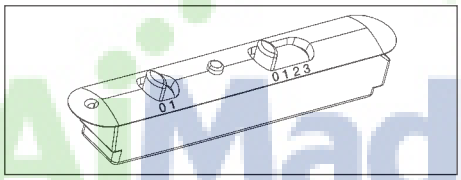

2. FIVE BUTTON CONTROL PANEL

LIGHT- button ☼

Pressed: the light is on
Released: the light is off

MOTOR button - 1, 2, 3, OFF
1: starts the motor at minimum speed
2: starts the motor at medium speed
3: starts the motor at maximum speed
OFF: stops the motor

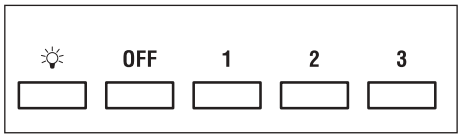

3. ELECTRONIC CONTROL PANEL

Light pushbutton ☼

- ON: light on (the pushbutton is lit);
- OFF: light off;

Pushbutton -
Press to reduce motor speed
Speed 1, 2 and 3 are indicated by the number of LEDs that light up (excluding the light and the timer LEDs).

AjMadison Your Appliance Authority™ 800-570-3355

Pushbutton +

Press to increase motor speed
Speed 1, 2 and 3 are indicated by the number of LEDs that light up (excluding the light and the timer LEDs).
(In the 4-speed version the pushbutton + blinks. The fourth speed remains on for a set duration of time. After 15 minutes the motor returns to the third speed).

Mode pushbutton

Function: it turns hood motor on and off.
The function **"desired speed"** enables to start the motor at the speed that was selected before the hood was last turned off.

Optional: *version with remote control (some versions only).*

WARNING:

Install the hood away from sources of electromagnetic waves, as these could affect the correct operation of the electronic system.
Maximum operating distance: 5 metres. The maximum operating distance could be less than 5 metres in case of electromagnetic interference by other equipment.
Light pushbutton on remote control: light on/off.
– and + pushbutton: increase/decrease speed (to start the motor press either the + or the – pushbutton).
Timer pushbutton: see instructions below.
Instructions for changing the code (only in case of malfunctions caused by interferences):
Disconnect the hood from the power supply
Remove the cover of the remote control, change the code with the levers.
Connect the hood to the power supply and make sure the lights and the motors are off.
Press the timer pushbutton for 2 seconds. When the red LED of the control panel lights up press any of the buttons on the control panel.

Timer and 'filter clogged' alarm pushbutton

• This function allows the automatic turning off of the hood after running for 15 minutes at the speed previously set (the pushbutton shows a flickering light).
• After about 30 hours of running the pushbutton indicates the need for washing the metal filters (the pushbutton shows a solid red light). To disable the alarm press the pushbutton for a few seconds until the red light turns off. Then turn the hood off and on again to check that the alarm has disappeared.

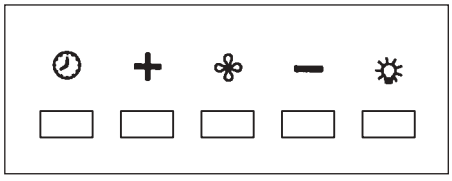

Madison Your Appliance Authority™ 800-570-3355

H FILTERS REMOVING AND REPLACING'S INSTRUCTIONS

1. METAL FILTERS

To remove the metal grease-trapping filter, simply pull the handle A until releasing it from the front guide; then tilt it slightly downwards, and slide it out of the rear guide. To reposition the filter, repeat the operation in the reverse order.

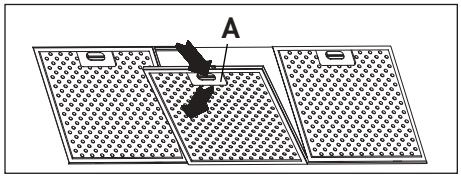

2. CHARCOAL FILTERS

To replace the charcoal filters, proceed as follows: remove the metal filters as described above. The two filters located at the ends of the motor can now be easily accessed.
To install the new filters see picture.
In case of hood with the motor box the filter is located on the botton part of the motor box.
To install the new filters see picture.
To order new filters, use the coupon enclosed with this booklet or provided by the distributor.

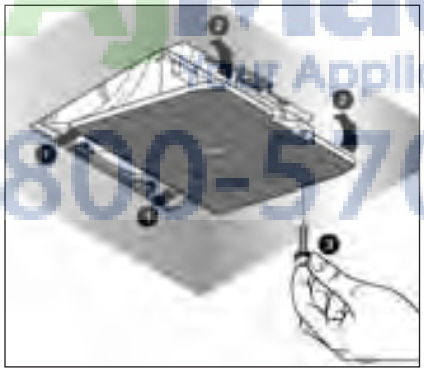

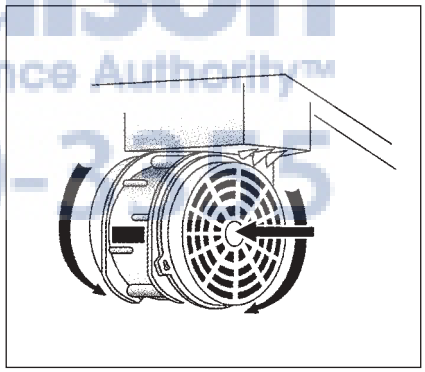

AJMadison Your Appliance Authority™ 800-570-2525

I LIGHTING ASSEMBLY AND REPLACEMENT

1. LIGHT BULB

To replace the light bulb:

a) Make sure the appliance is disconnected from the mains power supply.
b) Unscrew the support screw A and remove the light cover.
c) Replace the light bulb with the same model as the original (max 25 W, see the markings near the light).

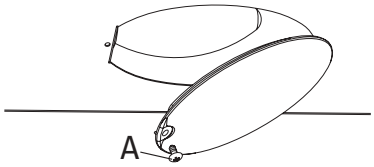

WARNING! Light bulbs with different shapes and power ratings from the original may seriously damage the light compartment.

2. SPOTLIGHT

To replace the lamp:

a) Make sure the appliance is disconnected from the mains power supply.
b) Remove, by levering with a screwdriver, the support ring A for the cover glass.
c) Remove the cover glass B to access the light compartment.
d) Replace the lamp with the same type (halogen, max 20 W, 12 Volt, G4 fitting).
e) Replace the glass cover B and fasten it using the special ring A.

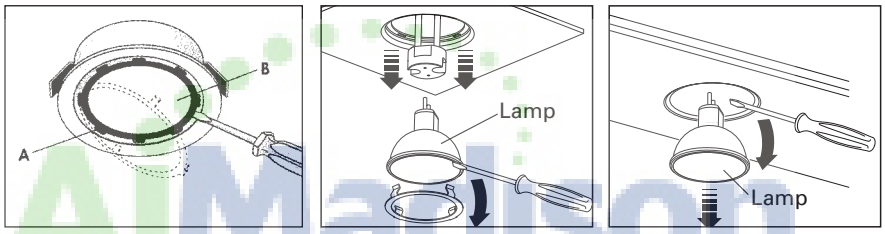

Halogen light | Built in dicroic spot | Standard dicroic spot

AJ Madison
Your Appliance Authority™
800-570-3355

3. FLUORESCENT TUBE

(Section reserved for qualified installers)

Replacing the fluorescent tube:

a) Disconnect the device from the mains;
b) Unscrew the fixing screws and remove the bottom panel;
c) Remove the fluorescent tube, by rotating through 90°, and replace it with one of similar features (8W-13W-21W-28W according with the model);
d) Reconnect the device to the mains.

L MAINTENANCE AND CLEANING

Constant maintenance ensures the correct operation and efficiency of the appliance over time. Special attention should be paid to the metal grease-trapping filters and the charcoal filters. Frequent cleaning of the filters and their supports will ensure that fats and grease do not accumulate on the range hood, with the consequent risk of fire.

1. METAL GREASE-TRAPPING FILTERS

These trap the fat and grease particles suspended in the air, and therefore should be washed every month in hot water and detergent, without bending them. Wait until they are completely dry before repositioning them.
To remove and replace these filters, see the instructions in point H1. This operation should be performed at regular intervals. The metal filters could be cleaned in a dishwasher.

2. CHARCOAL FILTERS

These trap the odours present in the stream of air that passes through them. The air is purified by passing a number of times through the filters and being recirculated into the kitchen. The charcoal filters cannot be cleaned, and should be replaced on average every 3-4 months (according to use). To replace the charcoal filters, see the instructions in point H2.

3. CLEANING THE OUTSIDE OF THE APPLIANCE

The ouside of the range hhod should be cleaned using a damp cloth and neutral liquid detergent or denatured alcohol.

In case of fingerprint-less finish (fasteel) clean only with water and neutral soap using clean with a soft cloth, rinse and wipe dry thoroughly. Do not use products that contain abrasive substances, rough cloths or cloths specifically designed for cleaning steel. Using abrasive substances or rough cloths will inevitably damage the finish of steel.

The steel surface will be irrevocably damaged if the instructions above are not complied with.

Keep these instructions together with the instructions for use of your hood.

The manufacturer accepts no liability for any damage caused by non-compliance with the instructions above.

4. CLEANING THE INSIDE OF THE APPLIANCE

The electrical parts or parts of the motor assembly inside the range hood must not be cleaned using liquids or solvents.

Do not use abrasive products.

All the above operations must be performed after having disconnected the appliance from the mains power supply.

M SAFETY WARNINGS CE

The electrical system features an earth connection in compliance with international safety standards; furthermore, it is compliant with the European standard for electromagnetic compatibility.

Do not connect the appliance to flues (from boilers, fireplaces, etc.). Make sure the mains voltage corresponds to the values on the rating plate located inside the range hood. The minimum safety distance between the cooktop and the range hood must be at least 65 cm.

Never cook on “open” flames under the range hood.

Check deep-fryers during use: superheated oil may be flammable.

- Ensure there is adequate ventilation of the room when the rangehood is used at the same time as appliances burning gas or other fuels.
- Do not flambe under the rangehood
- The exhaust air must not be discharged into a flue which is used for exhausting fumes from appliances burning gas or other fuels.
- Ensure that all regulations concerning the discharge of exhaust air have been fulfilled before you use the appliance.

Before performing any cleaning or maintenance operations, disconnect the appliance by unplugging it or using the main switch. The manufacturer disclaims all liability for any damage that may be directly or indirectly caused to people, things and animals due to the failure to follow all the instructions provided in this booklet and above all the warnings relating to the installation, operation and maintenance of the appliance.

AMadison Your Appliance Authority™ 800.570.3355

N WARRANTY

The new equipment is covered by warranty.
The warranty conditions are provided by the distributor.

The manufacturer is not liable for any inaccuracies in this booklet resulting from printing or transcription errors. The manufacturer reserves the right to modify its products as it considers necessary or in the interests of the user, without compromising their essential safety and operating characteristics.

O INSTALLATION OF ISLAND HOOD WITH LATTICE-WORK

Step 1

- Identify the desired height (H1=65) for the positioning of the hood.
- Slide the lattice-works (C) and (C1) to the desired height (H2), then block them with the 8 self-threading screws (V2) (Fig.1a).
- Fasten the lattice-work (C) to the ceiling using the four Ø 8 expansion plugs and relative screws(V1) (Fig.1b).
- Fasten the upper panel (C2) with 2 self-threading screws (V2).

The two upper screws have already been pre-tightened.

Step 2

- Insert the extension on the flue and fasten them to each other with masking tape (Fig. 2).

Fig. 1b

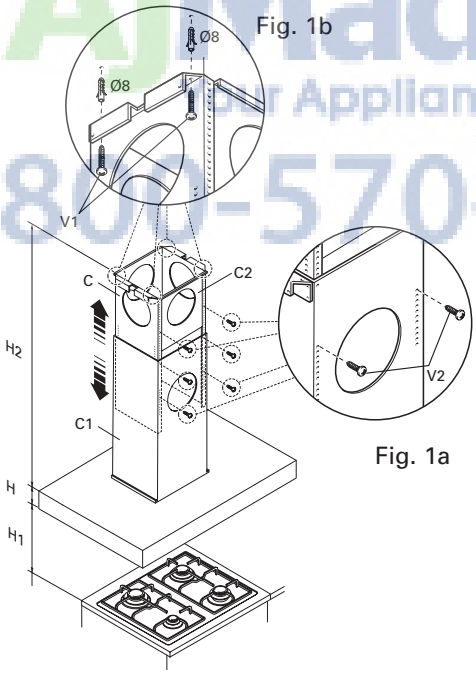

Fig. 1a

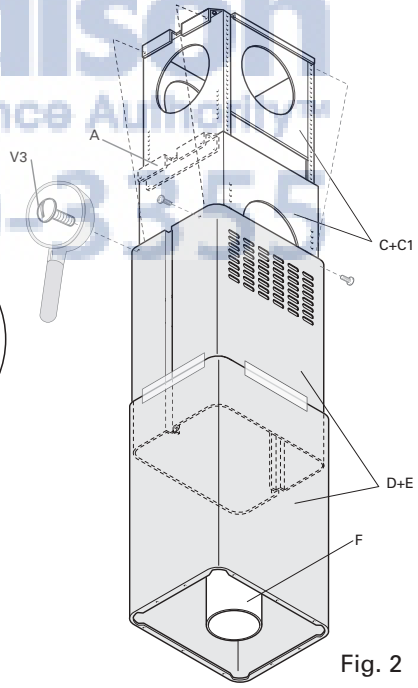

Fig. 2

- Fasten the flue-extension assembly (D+E) to the lattice-work (C) with the 4 M4 metric screws (V3) inserted in the existing holes without tightening them com-

AJ Madison
Your Appliance Authority
800-570-3535

pletely (Fig. 2).
- For suction version: identify the optimal height for the rigid or flexible exhaust pipe (F) and connect it to the motor connection.

Step 3

- Raise the hood, hooking it onto the 4 M5 metric screws (V4) pre-tightened to the lattice-work (C) (center the Ø11 holes on the slot of the inner liner and move it laterally)(Fig. 3a).
- Completely tighten the 4 M5 screws (V4) (Fig. 3b).
- Remove the masking tape (Fig. 3c), remove the four M4 metric screws (V3) previously tightened onto the lattice-work (Fig. 3d) and slide the flue-extension assembly downwards. (Fig. 3e).
- Connect the pipe to the connection of the ceiling discharge hole. (Fig. 3f).
- Make electrical connections only after having removed electrical power supply.
- Fasten the extension to the lattice-work (C) by means of the 4 M4 metric screws(V3), without tightening them completely(Fig. 3g).
- Cut to size the slot-covers (H) and insert them (Fig. 3h).
- Block the extension completely to the lattice-work (C) by screwing down the 4 M4 metric screws (V3).
- Block the flue with the 2 self-threading screws (V5) (Fig. 3i).
- Use the extension support elements(A) (Fig. 2) only if the upper lattice-work is not used, or in the case of a false ceiling.

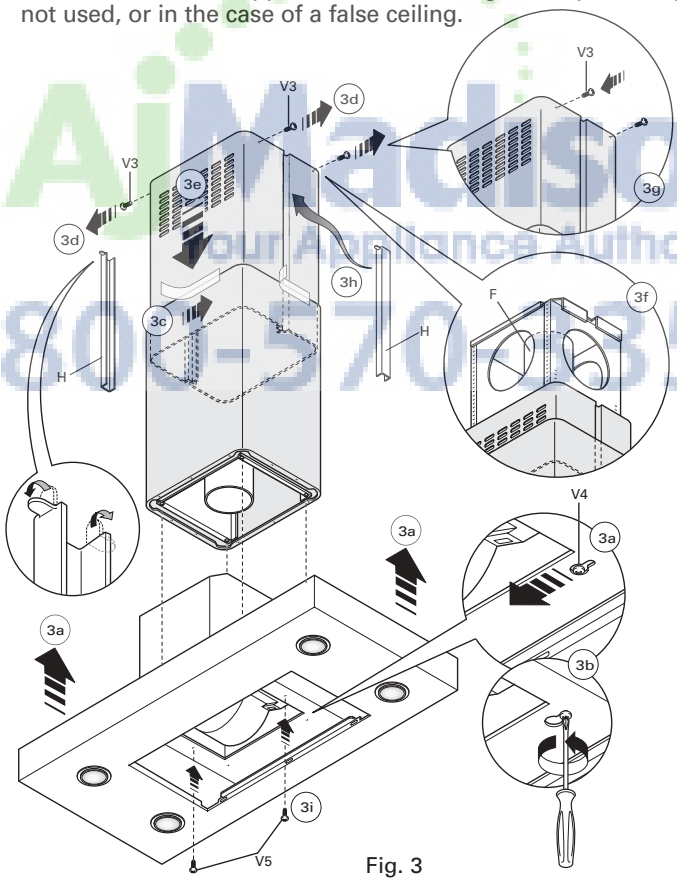

Fig. 3

AiMadison
YourAppliance Authority™
800-570-0355