WA50F9A7DSP
Samsung Top Load Washer

FEATURES
- 5.0 capacity (cu. ft./DOE)
- AquaJet™
- Smart Care
- Diamond Drum™ design
- PureCycle™ (tub clean)
- 15 preset wash cycles with 11 options
- VRT™ – Vibration Reduction Technology
- 1100 rpm maximum spin speed
- Stainless steel pulsator
- Direct Drive Inverter Motor
- LED display: Ice Blue
- Door lid: Chrome Deco curved tinted glass
- Soft Close Lid

CONVENIENCE
- Child lock
- Delay start – up to 24 hours
- 5 temperature settings
- 5 spin settings
- 5 soil settings
- Dispenser trays: Main Wash, Fabric Softener, Bleach

ENERGY STAR® RATED:
Rated CEE Tier 3
MEF = 2.7
WCF = 3.7
165 kWh/yr

ENERGY STAR

10 YEAR WARRANTY Direct Drive



*Ranked **"Highest in Customer Satisfaction with Clothes Washers"** by J.D. Power and Associates.* (4 Consecutive Years)*



AjMadison
Your Appliance Authority™
800-570-3355

SIGNATURE FEATURES

Extra-large Capacity
New for 2013, our largest capacity top loader yet: 5.0 cu. ft. – so you can wash up to 2.6 baskets of laundry in a single load.

AquaJet™
Water jets thoroughly wash and rinse your family's biggest loads.

Smart Care
Diagnoses error codes without a manual or phone call.

ENERGY STAR® and Tier 3-certified to save power and money
ENERGY STAR® certification means this model helps the environment by using less energy and water, which reduces the money you spend on electricity. ENERGY STAR® is a joint program of the U.S. Environmental Protection Agency and the U.S. Department of Energy promoting energy efficiency. Also rated Tier 3 for best energy efficiency by the Consortium for Energy Efficiency (CEE).

Available colors
Stainless Platinum

Neat White

* Samsung received the highest numerical score for clothes washers in the proprietary J.D. Power and Associates 2009-2012 Laundry Appliance Study℠ 2012 study based on 9,339 total responses measuring 12 brands and measures opinions of consumers about their washer obtained new in the past 24 months. Proprietary study results are based on experiences and perceptions of consumers surveyed in January–February 2012. Your experiences may vary. Visit jdpower.com.

WA50F9A7DSP
Samsung Top Load Washer

INSTALLING YOUR WASHER

Alcove or closet installation

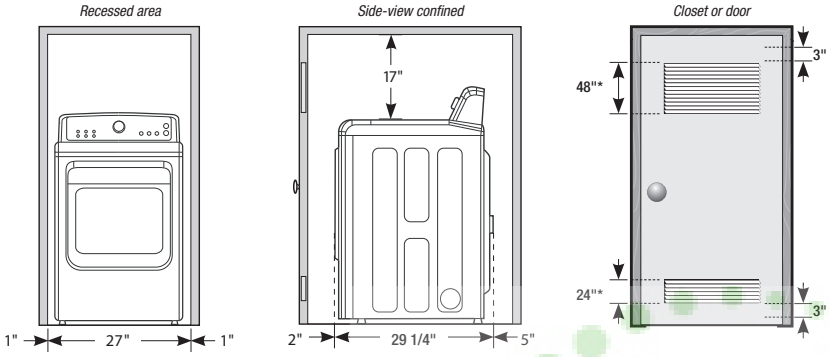

Minimum clearances for closets and alcoves:

Sides – 1"
Top – 17"
Rear – 5"
Closet front – 2"

If the washer and dryer are installed together, the closet front must have at least a 72 in (465 cm) unobstructed air opening. Your washer alone does not require a specific air opening.

* Required spacing. (External exhaust elbow requires additional space)

Dimensions:

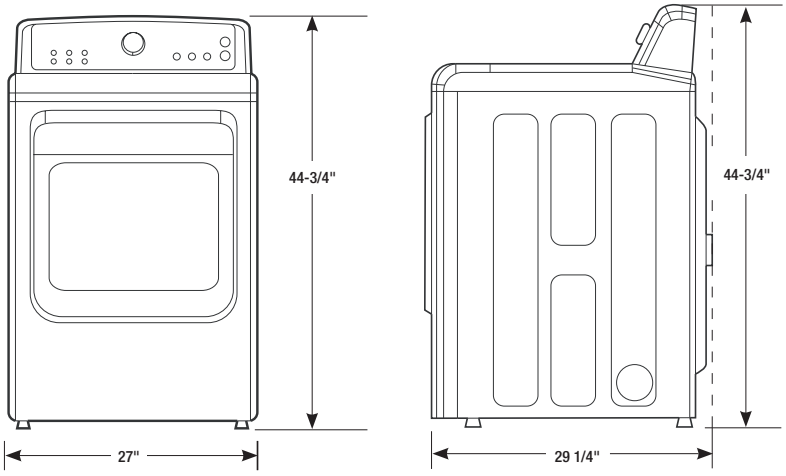

5.0 capacity (cu. ft./DOE)

15 preset wash cycles:
Normal, Heavy Duty, Permanent Press, Deep Clean, Towels, Bedding, Colors/Darks, Infant Wear, Active Wear, Delicates/Hand Wash, Wool, Quick Wash, PureCycle,™ Rinse + Spin, Spin Only

11 options:
AquaJet™ Deep Clean, Delay Start – up to 24 hours, My Cycle, Pre Soak, Extra Rinse, Signal On/Off, Child Lock, Fabric Softener, AquaJet™ Delicate Wash, Add A Garment, Eco Plus

5 temperature settings:
Hot, Warm, Eco Warm, Cold, Tap Cold

5 spin settings:
Extra High, High, Medium, Low, No Spin

5 soil settings:
Heavy, Heavy Medium, Normal, Low Medium, Light

Warranty
One (1) Year Parts and Labor
Two (2) Years Control Board
Three (3) Years Stainless Steel Drum
Ten (10) Years Direct Drive Motor

Product dimensions & weight (WxHxD)
Dimensions: 27" x 44 3/4 "x 29 1/4"
Weight: 142.7 lbs.

Shipping dimensions & weight (WxHxD)
Dimensions: 29 1/2" x 47" x 31"
Weight: 153.7 lbs.

Color	Model #	UPC Code
Stainless Platinum	WA50F9A7DSP	887276025988
Neat White	WA50F9A7DSW	887276018157

Matching Dryer (electric/gas)

Stainless Platinum	DV50F9A7EVP	887276025964
Neat White	DV50F9A7EVW	887276018690
Stainless Platinum	DV50F9A7GVP	887276025971
Neat White	DV50F9A7GVW	887276018706

Actual color may vary. Design, specifications, and color availability are subject to change without notice. Non-metric weights and measurements are approximate.
©2013 Samsung Electronics America, Inc. 85 Challenger Road, Ridgefield Park, NJ 07660. Tel: 800-SAMSUNG. samsung.com. Samsung is a registered trademark of Samsung Electronics Co. Ltd.