The Gaggenau Models and Dimensions.

Edition 2013.

AjMadison
Your Appliance Authority™
800-570-3355

Sound advice is at the heart of a perfect kitchen.

Here you will find all the information you need. Built-in appliances from Gaggenau perfectly combine function and aesthetics – with clear-cut design and no compromise in terms of technology. This has already won us numerous international design awards, which our products receive time and time again. Something which is confirmed by our satisfied customers.

Because it is you, the trade partner, kitchen planner or architect, who designs the best kitchen for each individual customer. Our aim is to provide you with targeted assistance, therefore we have brought together all the information you need on the following pages. Thematically ordered and clearly presented, with dimensions and product descriptions. So you can save time whilst still receiving even clearer advice. The difference is Gaggenau.

Design Innovationen Essen · Germany
Roter Punkt

Industrie Forum Design Hannover

GOOD DESIGN

DESIGNPREIS 2009
SILBER

Designpreis Deutschland 2011
NOMINIERT

Industrie Forum Design Hannover, Designzentrum Nordrhein-Westfalen, the Chicago Athaneum Museum for Architecture and Design and the Design price of Germany have honoured several products for their good design quality.
The corresponding models have each been assigned a logo.

AiMadison
Appliance Authority™
800-570-3355

Ovens 400 series. 2

Ovens 200 series. 38

Ovens EB 388 / EB 385. 68

Vario cooktops. 78

Cooktops. 150

Ventilation appliances. 194

Cooling appliances. 254

Dishwashers / Washing machine / Condenser dryer. 316

Accessories. 346

AjMadison
Your Appliance Authority™
800-570-3355

AjMadison
Your Appliance Authority™
800-570-3355

Ovens 400 series.

Checkliste for appliance combinations 400 series. 4

Planning notes for ovens / oven combinations 400 series. 6

Ovens 400 series. 8

Combi-steam ovens 400 series. 12

Combi-microwave ovens 400 series. 17

Fully automatic espresso machine 400 series. 18

Warming drawers 400 series. 19

Accessories / special accessories 400 series. 22

Technical specifications 400 series. 28

AjMadison
Your Appliance Authority™
800-570-3355

Checkliste for appliance combinations 400 series.

This check list provides the most relevant parameters for the perfect combination and ordering of ovens, Combi-steam ovens, Combi-microwave ovens, fully automatic espresso machine, warming drawers and dishwashers.

In general:

- ☐ All appliances shown can be obtained with stainless-steel-backed full glas doors.
- ☐ When several appliances are listed (BS/BM), the first appliance is shown.

Vertical combinations
When planning and ordering please note that

- ☐ The door hinges of the appliances must be on the same side.
- ☐ The door hinge (right-/left-hinged) is not reversible.
- ☐ The width of the appliances is identical.
- ☐ The control modules of the two appliances should meet each other in the middle of the combination.
- ☐ No further appliances may be fitted above the BS.
- ☐ Only appliances with controls at the top can be installed above a dishwasher. The niche for appliances that are installed above it must be 56 cm wide. The dishwasher is 60 cm wide. A stainless-steel-backed full glass door can be obtained as a special accessory.

Horizontal combinations
When planning and ordering please note that

- ☐ The door hinges need to be placed on the outside in order to use the full available door opening angle.
- ☐ The door hinge (right-/left-hinged) is not reversible.
- ☐ A minimum clearance of 10 mm between the two doors must be observed.
- ☐ Combi-steam ovens, Combi-microwave ovens and fully automatic espresso machine in combination with a warming drawer (14 cm in height) have the same total height as a 60 cm wide oven.
- ☐ The control modules are either all at the top or all at the bottom.

BO Ovens
BS Combi-steam ovens
BM Combi-microwave ovens
CM Fully automatic espresso machine
WS Warming drawers
DF Dishwashers

Vertical combination, 76 cm / 30'' wide appliances

- BS 484
- BO 480
- WS 482

- BX 480
- WS 482

Combination of 4, 76 cm / 30'' wide appliances

- BS 485
- BO 481

- BS 484
- BO 480

Horizontal combination, 76 cm / 30'' wide appliances

- BO 481

- BO 480

Vertical combination, 60 cm wide appliances

- BS 474/BS 454/BM 454
- BO 470/BO 450
- WS 462

- BS 454/BS 474/BM 454
- BO 470/BO 450
- WS 462

- BS 454/BS 474/BM 454
- BM 450
- WS 461

- BM 454/BS 474/BS 454
- CM 450
- WS 461

- BO 470/BO 450
- DF

- BS 470/BS 450/BM 450
- DF

- CM 450
- DF

AJMadison
Your Appliance Authority™
800-570-3355

Horizontal combination, 60 cm wide appliances

- BO 471/BO 451

- BO 470/BO 450

- BO 471/BO 451

- BS 470/BS 450/BM 450
- WS 461

- BO 471/BO 451

- CM 450
- WS 461

- BS 451/BS 471/BM 451
- WS 461

- BM 450/BS 470/BS 450
- WS 461

- BS 471/BS 451/BM 451
- WS 461

- CM 450
- WS 461

- BO 471/BO 451

- CM 450
- WS 461

- BS 470/BS 450/BM 450
- WS 461

- BM 451/BS 471/BS 451
- WS 461

- CM 450
- WS 461

- BS 450/BS 470/BM 450
- WS 461

AjMadison
Your Appliance Authority™
800-570-3355

Combination of 4 with warming drawer, 60 cm wide appliances

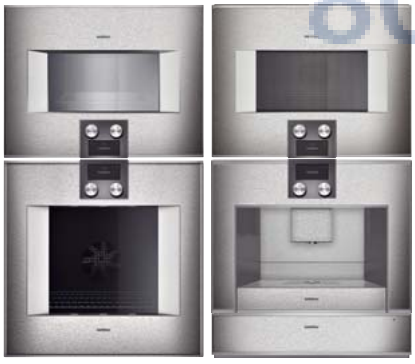

- BS 455/BS 475/BM 455
- BO 471/BO 451
- BM 454/BS 474/BS 454
- CM 450
- WS 461

Applies to BO/BX/BS/BM/WS/CM

General notes

Installation behind kitchen furniture doors
Appropriate measures must be taken to prevent these types of doors from closing when the appliance is heating or while it is cooling down (fan operation).

Combination of ovens and Vario cooling 400 series appliances
Please check the planning notes in the information for Vario cooling 400 series appliances in order to prevent the refrigerator door from colliding with the oven.

Installation side by side
When appliances are installed side by side, the clearance between the appliances must be at least 10 mm (corresponds to the standard outside measurement of the furniture cavity of 600 or 762 mm).
The door hinges need to be placed outside in order to use the full available door opening angle.

Installation side by side

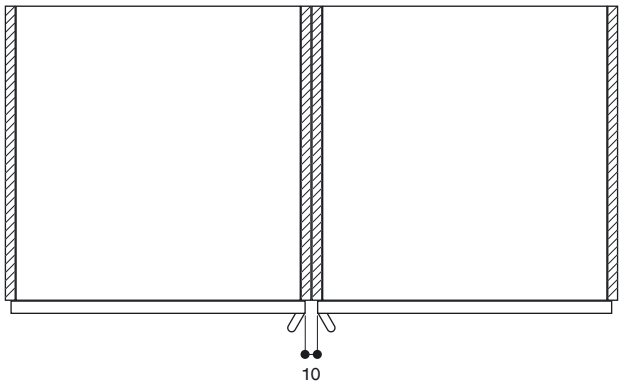

Necessary air cross section at the door edges

Gaggenau ovens 400 series are cooled with fresh air at the top edge and side edges of the door. Hot air is blown out at the door bottom edge. Combi-steam ovens, and Combi-microwave ovens have the air inlet at the side edges of the door and the hot air and steam outlets at the top edge of the door.
In order to prevent appliances from overheating and to ensure that they cool down as required after operation, appropriate minimum cross sections of free space must be maintained from kitchen furniture edges.

The measurements given in the drawing apply to all appliances.
The following must also be observed:

The area above the appliances
BS:
No other electrical appliances should be installed above the BS. It is recommended that a horizontal handle is not fitted on furniture above the BS.
Where the edge of a kitchen unit protrudes more than 20 mm from the front edge of the furniture cavity, the edge of the kitchen furniture panel must be steam resistant as is the case above a dishwasher. Steam may possibly penetrate into the compartment.

The area below the appliances
WS:
It must be ensured that there is sufficient access to the lower edge of the warming drawer, if the thickness of the kitchen furniture door is greater than 20 mm in front of the furniture cavity.

Cross section of the top/bottom door edge gaps

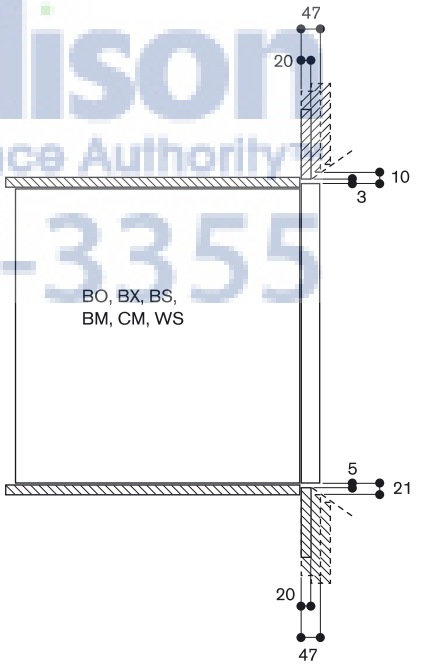

Appliance Authority
800-570-3355

At the sides

In cases where kitchen furniture door thicknesses are greater or where sidewalls protrude up to 34 mm from front of the edge of the furniture cavity, the minimum distance on the hinge side is sufficient for the air supply and a door opening angle of 120°. Above that, a distance of 10 mm or even more is required.

The handle side may, if required, be covered by a side panel provided that the minimum distance is maintained.

Cross section of the door edge gaps at the sides

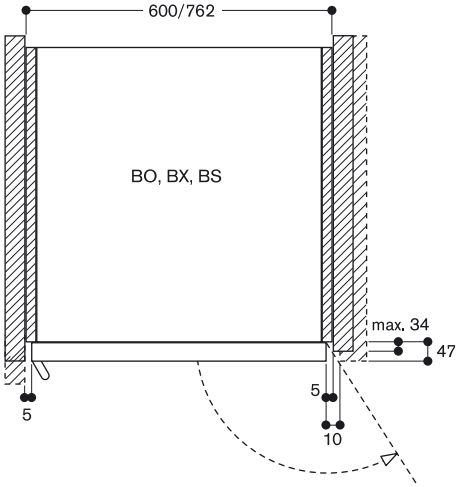

AjMadison
Your Appliance Authority™
800-570-3355

Controls centered

Right-hinged

BX 480 110▼

Stainless steel-backed full glass door
Width 76 cm

Left-hinged

BX 481 110▼

Stainless steel-backed full glass door
Width 76 cm

▼ Available 2. quarter 2013

Included in the price

2 baking trays, enamelled pyrolysis-safe
1 rotisserie spit
2 wire racks
2 grill trays with wire rack
1 plug-in core temperature probe

Special accessories

BA 018 103
Pull-out system
Fully extendable telescopic rails and enamelled cast iron frame.

BA 028 113
Baking tray, enamelled
30 mm deep.

BA 038 103
Wire rack, chromium-plated
Without opening, with feet.

BA 058 113
Heating element for baking stone and Gastronorm roaster

BA 058 133
Baking stone
Incl. baking stone support and pizza paddle (heating element must be ordered separately).

BS 020 002
Pizza paddle, set of 2

GN 340 230
Gastronorm roaster in cast aluminium
GN 2/3, height 165 mm, non-stick

Double oven 400 series
BX 480/BX 481

- Pyrolytic system
- 17 heating methods, with core temperature probe, rotisserie spit and baking stone function
- TFT touch display
- Electronic temperature control from 30 °C to 300 °C
- 2 x 110 litres net volume

Heating methods

Hot air.
Eco hot air.
Top + bottom heat.
Top + 1/3 bottom heat.
Top heat.
1/3 top + bottom heat.
Bottom heat.
Hot air + bottom heat.
Hot air + 1/3 bottom heat.
Full surface grill + circulated air.
Full surface grill.
Compact grill.
Baking stone function.
Roaster function.
Dough proofing.
Defrosting.
Keeping warm.

Handling

Rotary knob and TFT touch display operation.
Clear text display in 25 languages.
Information key with use indicators.
Side-opening door opens up to 180° angle.

Features

Core temperature probe with automatic shut-off (lower oven).
Rotisserie spit (lower oven).
Baking stone socket.
Actual temperature display.
Rapid heating.
Timer functions: cooking time, cooking time end, timer, stopwatch, long-term timer.
60 W halogen light on the top.
10 W halogen light on the side.
Enamelled side shelf supports with 5 tray levels, pyrolysis-safe.

Safety

Thermally insulated door with quadruple glazing.
Child lock.
Safety shut-off.
Cooled housing with temperature protection.

Cleaning

Pyrolytic system.
Gaggenau enamel.
Heated air cleaning catalyser.

Planning notes

Door hinge not reversible.
The door panel surface of the appliance extends 47 mm from the furniture cavity.
The outer edge of the door handle extends 94 mm from the furniture cavity. Consider the overhang, incl. the door handle, when planning to open drawers next to the appliance.
When planning a corner solution, pay attention to the 90° door opening angle.
To achieve the 550 mm installation depth, the connection cable needs to follow the slanted edge on the lower right hand corner of the housing.
The mains socket needs to be planned outside of the built-in niche.

Please read the installation details regarding air ducting on page 6/7.

Connection

Energy efficiency class B.
Total connected load 9.2 kW.
Plan a connection cable.

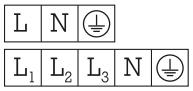

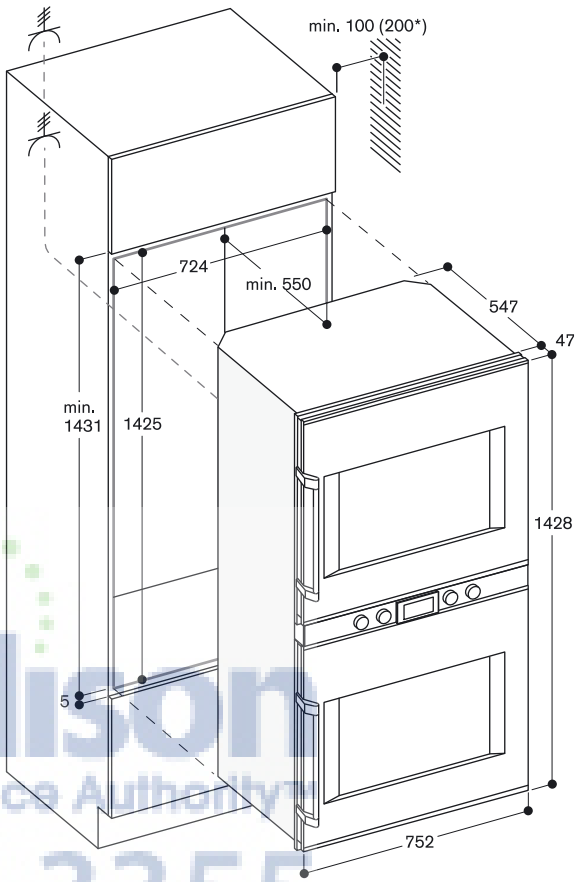

* 200 mm in conjunction with BA 018 103

AirMadison
Your Appliance Authority
800-570-3355

Controls at the top

Right-hinged

BO 480 110▼

Stainless steel-backed full glass door
Width 76 cm

Left-hinged

BO 481 110▼

Stainless steel-backed full glass door
Width 76 cm

▼ Available 2. quarter 2013

Included in the price

1 baking tray, enamelled pyrolysis-safe
1 rotisserie spit
1 wire rack
1 grill tray with wire rack
1 plug-in core temperature probe

Installation accessories

BA 478 110▼

Handle bar, stainless steel
Length 366 mm.

Special accessories

BA 018 103

Pull-out system
Fully extendable telescopic rails and enamelled cast iron frame.

BA 028 113

Baking tray, enamelled
30 mm deep.

BA 038 103

Wire rack, chromium-plated
Without opening, with feet.

BA 058 113

Heating element for baking stone and Gastronorm roaster

BA 058 133

Baking stone
Incl. baking stone support and pizza paddle (heating element must be ordered separately).

BS 020 002

Pizza paddle, set of 2

GN 340 230

Gastronorm roaster in cast aluminium
GN 2/3, height 165 mm, non-stick

Oven 400 series
BO 480/BO 481

- Handleless door / automatic door opening
- Pyrolytic system
- 17 heating methods, with core temperature probe, rotisserie spit and baking stone function
- TFT touch display
- Panel-free appliance with surface control module
- Electronic temperature control from 30 °C to 300 °C
- 110 litres net volume

Heating methods

Hot air.
Eco hot air.
Top + bottom heat.
Top + 1/3 bottom heat.
Top heat.
1/3 top + bottom heat.
Bottom heat.
Hot air + bottom heat.
Hot air + 1/3 bottom heat.
Full surface grill + circulated air.
Full surface grill.
Compact grill.
Baking stone function.
Roaster function.
Dough proofing.
Defrosting.
Keeping warm.

Handling

Automatic door opening.
Rotary knob and TFT touch display operation.
Clear text display in 25 languages.
Option to save individual recipes (incl. core temperature probe).
Information key with use indicators.
Side-opening door opens up to 180° angle.

Features

Core temperature probe with automatic shut-off.
Rotisserie spit.
Baking stone socket.
Actual temperature display.
Rapid heating.
Timer functions: cooking time, cooking time end, timer, stopwatch, long-term timer.
60 W halogen light on the top.
2 x 10 W halogen light on the side.
Enamelled side shelf supports with 5 tray levels, pyrolysis-safe.

Safety

Thermally insulated door with quadruple glazing.
Child lock.
Safety shut-off.
Cooled housing with temperature protection.

Cleaning

Pyrolytic system.
Gaggenau enamel.
Heated air cleaning catalyser.

Planning notes

Door hinge not reversible.
The door panel surface of the appliance extends 47 mm from the furniture cavity.
If the handle (optional accessory) is retrofitted, the outer edge of the door handle extends 94 mm from the furniture cavity.
Consider the overhang, incl. the door handle where applicable, when planning to open drawers next to the appliance.

When planning a corner solution, pay attention to the 90° door opening angle.
To achieve the 550 mm installation depth, the connection cable needs to follow the slanted edge on the lower right hand corner of the housing.
The mains socket needs to be planned outside of the built-in niche.

Please read the installation details regarding air ducting on page 6/7.

Connection

Energy efficiency class B.
Total connected load 5.5 kW.
Plan a connection cable.

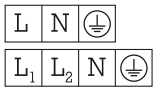

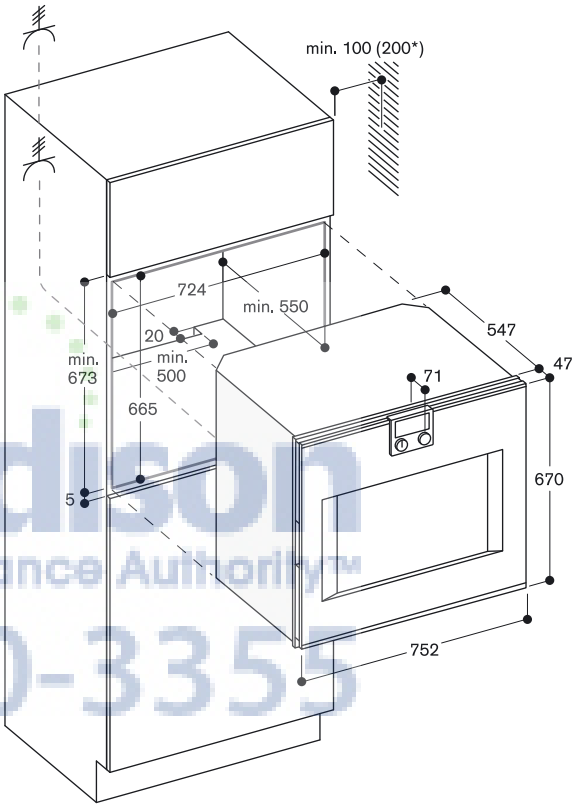

* 200 mm in conjunction with BA 018 103

AJMadison
Your Appliance Authority
800-570-3355

Controls at the top

Right-hinged

BO 470 110▼

Stainless steel-backed full glass door
Width 60 cm

Left-hinged

BO 471 110▼

Stainless steel-backed full glass door
Width 60 cm

▼ Available 2. quarter 2013

Included in the price

2 baking trays, enamelled pyrolysis-safe
1 rotisserie spit
1 glass tray
1 wire rack
1 grill tray with wire rack
1 plug-in core temperature probe

Installation accessories

BA 476 110▼

Handle bar, stainless steel
Length 577 mm.

Special accessories

BA 016 103

Pull-out system
Fully extendable telescopic rails and enamelled cast iron frame.

BA 026 103

Grill tray, enamelled
30 mm deep.

BA 026 113

Baking tray, enamelled
15 mm deep.

BA 036 103

Wire rack, chromium-plated
Without opening, with feet.

BA 046 113

Glass tray
24 mm deep.

BA 056 113

Heating element for baking stone and Gastronorm roaster

BA 056 133

Baking stone
Incl. baking stone support and pizza paddle (heating element must be ordered separately).

BS 020 002

Pizza paddle, set of 2

GN 340 230

Gastronorm roaster in cast aluminium
GN 2/3, height 165 mm, non-stick

Oven 400 series

BO 470/BO 471

- Handleless door / automatic door opening
- Pyrolytic system
- 17 heating methods, with core temperature probe, rotisserie spit and baking stone function
- TFT touch display
- Panel-free appliance with surface control module
- Electronic temperature control from 30 °C to 300 °C
- 76 litres net volume
- Energy efficiency class A

Heating methods

Hot air.
Eco hot air.
Top + bottom heat.
Top + 1/3 bottom heat.
Top heat.
1/3 top + bottom heat.
Bottom heat.
Hot air + bottom heat.
Hot air + 1/3 bottom heat.
Full surface grill + circulated air.
Full surface grill.
Compact grill.
Baking stone function.
Roaster function.
Dough proofing.
Defrosting.
Keeping warm.

Handling

Automatic door opening.
Rotary knob and TFT touch display operation.
Clear text display in 25 languages.
Option to save individual recipes (incl. core temperature probe).
Information key with use indicators.
Side-opening door opens up to 180° angle.

Features

Core temperature probe with automatic shut-off.
Rotisserie spit.
Baking stone socket.
Actual temperature display.
Rapid heating.
Timer functions: cooking time, cooking time end, timer, stopwatch, long-term timer.
60 W halogen light on the top.
2 x 10 W halogen light on the side.
Enamelled side shelf supports with 4 tray levels, pyrolysis-safe.

Safety

Thermally insulated door with quadruple glazing.
Child lock.
Safety shut-off.
Cooled housing with temperature protection.

Cleaning

Pyrolytic system.
Gaggenau enamel.
Heated air cleaning catalyser.

Planning notes

Door hinge not reversible.
The door panel surface of the appliance extends 47 mm from the furniture cavity.
If the handle (optional accessory) is retrofitted, the outer edge of the door handle extends 94 mm from the furniture cavity.
Consider the overhang, incl. the door handle where applicable, when planning to open drawers next to the appliance.

When planning a corner solution, pay attention to the 90° door opening angle.
To achieve the 550 mm installation depth, the connection cable needs to follow the slanted edge on the lower right hand corner of the housing.
The mains socket needs to be planned outside of the built-in niche.

Please read the installation details regarding air ducting on page 6/7.

Connection

Energy efficiency class A.
Total connected load 3.7 kW.
Plan a connection cable.

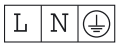

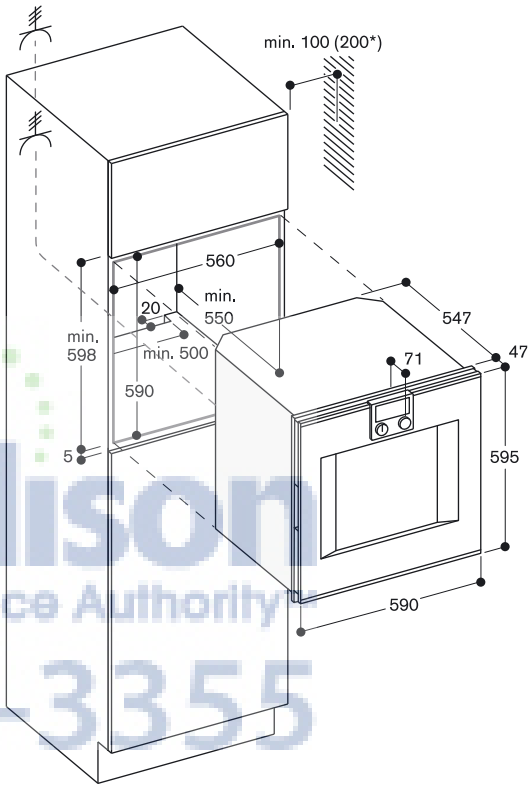

* 200 mm in conjunction with BA 016 103

AjMadison
Your Appliance Authority
800-570-3355

Controls at the top

Right-hinged

BO 450 110▼

Stainless steel-backed full glass door
Width 60 cm

Left-hinged

BO 451 110▼

Stainless steel-backed full glass door
Width 60 cm

▼ Available 2. quarter 2013

Included in the price

1 baking tray, enamelled pyrolysis-safe
1 glass tray
1 wire rack
1 plug-in core temperature probe

Installation accessories

BA 476 110▼

Handle bar, stainless steel
Length 577 mm.

Special accessories

BA 016 103

Pull-out system
Fully extendable telescopic rails and enamelled cast iron frame.

BA 026 113

Baking tray, enamelled
15 mm deep.

BA 036 103

Wire rack, chromium-plated
Without opening, with feet.

BA 046 113

Glass tray
24 mm deep.

BA 056 113

Heating element for baking stone and Gastronorm roaster

BA 056 133

Baking stone
Incl. baking stone support and pizza paddle (heating element must be ordered separately).

BA 226 103

Grill tray, enamelled
30 mm deep.

BS 020 002

Pizza paddle, set of 2

GN 340 230

Gastronorm roaster in cast aluminium
GN 2/3, height 165 mm, non-stick

Oven 400 series

BO 450/BO 451

- Handleless door / automatic door opening
- Pyrolytic system
- 13 heating methods, with core temperature probe and baking stone function
- TFT touch display
- Panel-free appliance with surface control module
- Electronic temperature control from 30 °C to 300 °C
- 76 litres net volume
- Energy efficiency class A

Heating methods

Hot air.
Eco hot air.
Top + bottom heat.
Top heat.
Bottom heat.
Hot air + bottom heat.
Full surface grill + circulated air.
Full surface grill.
Compact grill.
Baking stone function.
Roaster function.
Dough proofing.
Defrosting.

Handling

Automatic door opening.
Rotary knob and TFT touch display operation.
Clear text display in 25 languages.
Option to save individual recipes (incl. core temperature probe).
Information key with use indicators.
Side-opening door opens up to 180° angle.

Features

Core temperature probe with automatic shut-off.
Baking stone socket.
Actual temperature display.
Rapid heating.
Timer functions: cooking time, cooking time end, timer, stopwatch, long-term timer.
60 W halogen light on the top.
10 W halogen light on the side.
Enamelled side shelf supports with 4 tray levels, pyrolysis-safe.

Safety

Thermally insulated door with quadruple glazing.
Child lock.
Safety shut-off.
Cooled housing with temperature protection.

Cleaning

Pyrolytic system.
Gaggenau enamel.
Heated air cleaning catalyser.

Planning notes

Door hinge not reversible.
The door panel surface of the appliance extends 47 mm from the furniture cavity.
If the handle (optional accessory) is retrofitted, the outer edge of the door handle extends 94 mm from the furniture cavity.
Consider the overhang, incl. the door handle where applicable, when planning to open drawers next to the appliance.

When planning a corner solution, pay attention to the 90° door opening angle.
To achieve the 550 mm installation depth, the connection cable needs to follow the slanted edge on the lower right hand corner of the housing.
The mains socket needs to be planned outside of the built-in niche.

Please read the installation details regarding air ducting on page 6/7.

Connection

Energy efficiency class A.
Total connected load 3.7 kW.
Plan a connection cable.

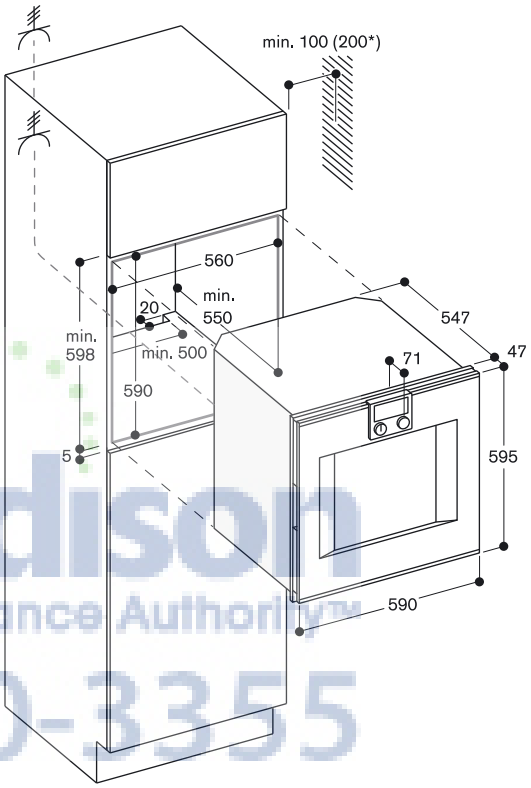

* 200 mm in conjunction with BA 016 103

AiMadison
Your Appliance Authority™
800-570-3355

Controls at the bottom

Right-hinged

BS 484 110▼

Stainless steel-backed full glass door
Width 76 cm

Left-hinged

BS 485 110▼

Stainless steel-backed full glass door
Width 76 cm

▼ Available 2. quarter 2013

Included in the price

1 Gastronorm insert, stainless steel, GN 2/3 unperforated
1 Gastronorm insert, stainless steel, GN 2/3 perforated
1 wire rack
1 outlet hose (3 m long)
1 water inlet hose (3 m long)
1 plug-in core temperature probe

Installation accessories

BA 478 310▼
Handle bar, stainless steel
Length 181 mm.

GF 111 100▼
Descaling and neutralising filter

GF 121 110▼
Filter cartridge

GZ 010 011
Aqua stop extension (2 m long)
Extends the water inlet and outlet.

Special accessories

GN 114 130
Gastronorm insert, stainless steel, GN 1/3
Unperforated, 40 mm deep, 1.5 l.

GN 114 230
Gastronorm insert, stainless steel, GN 2/3
Unperforated, 40 mm deep, 3 l.

GN 124 130
Gastronorm insert, stainless steel, GN 1/3
Perforated, 40 mm deep, 1.5 l.

GN 124 230
Gastronorm insert, stainless steel, GN 2/3
Perforated, 40 mm deep, 3 l.

GN 340 230
Gastronorm roaster in cast aluminium
GN 2/3, height 165 mm, non-stick

GN 410 130
Gastronorm lid, stainless steel, GN 1/3

GN 410 230
Gastronorm lid, stainless steel, GN 2/3

GR 220 046
Wire rack, chromium-plated
Without opening, with feet.

Combi-steam oven 400 series
BS 484/BS 485

- Handleless door / automatic door opening
- Fixed inlet and outlet water connection
- Hot air 30 °C to 230 °C can be combined with chosen humidity level of 0%, 30%, 60%, 80% or 100%
- Full surface grill behind glass ceramic for easy cleaning, combinable with circulated air up to 230 °C and steam
- TFT touch display
- Panel-free appliance with surface control module
- Steaming without pressure
- Electronic temperature control from 30 °C to 230 °C
- Core temperature probe, removable
- Net volume 44 litres
- Energy efficiency class A

Heating methods

Hot air + 100 % humidity.
Hot air + 80 % humidity.
Hot air + 60 % humidity.
Hot air + 30 % humidity.
Hot air + 0 % humidity.
Full surface grill + circulated air.
Full surface grill.
Full surface grill level 1 + humidity.
Full surface grill level 2 + humidity.
Dough proofing.
Defrosting.
Regenerating.
Low temperature cooking.

Handling

Automatic door opening.
Rotary knob and TFT touch display operation.
Clear text display in 25 languages.
Option to save individual recipes (incl. core temperature probe).
Information key with use indicators.
Side-opening door opens up to 180° angle.

Features

Full surface grill 2.000 W behind glass ceramic.
Steam removal.
Core temperature probe with automatic shut-off.
Actual temperature display.
Timer functions: cooking time, cooking time end, timer, stopwatch, long-term timer.
Electronic boiling point detection.
Capacity display for filter cartridge (if connected to GF 111 100 descaling system).
60 W halogen light on the side.
Hygienic stainless steel cooking interior.
4 tray levels.

Safety

Child lock.
Safety shut-off.
Cooled housing with temperature protection.

Cleaning

Cleaning aid.
Drying programme.
Descaling aid.
Grease filter, dishwasher-safe.

Planning notes

Door hinge not reversible.
No other electrical appliances should be installed above the BS.

At no point may the outlet hose be positioned higher than the bottom edge of the appliance. The outlet hose must also be at least 100 mm lower than the appliance outlet (see drawing "drain connection").
The outlet hose must not be longer than a maximum of 5 m.
The water connection (1) for the inlet hose must always be accessible and not located directly behind the appliance.
The connection of the outlet hose to the siphon (2) must not be directly behind the appliance and should be accessible.
The descaling system GF 111 100 (3) must be installed when connecting the appliance if the water hardness exceeds 7° dH.
The door panel surface of the appliance extends 47 mm from the furniture cavity.
If the handle (optional accessory) is retrofitted, the outer edge of the door handle extends 94 mm from the furniture cavity.
Consider the overhang, incl. the door handle where applicable, when planning to open drawers next to the appliance.
When planning a corner solution, pay attention to the 90° door opening angle.
To achieve the 550 mm installation depth, the water hoses and connection cable needs to follow the slanted edge on the corner of the housing.
The mains socket needs to be planned outside of the built-in niche.

Please read the installation details regarding air ducting on page 6/7.

Connection

Energy efficiency class A.
Total connected load 2.9 kW.
Only cold water connection.
Inlet hose 3.0 m with 3/4 " connection.
Outlet hose (ø 25 mm) 3.0 m (HT-Hose).
Plan a connection cable.

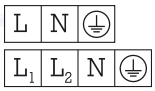

AMadison
Your Appliance Authority™
800-570-3355

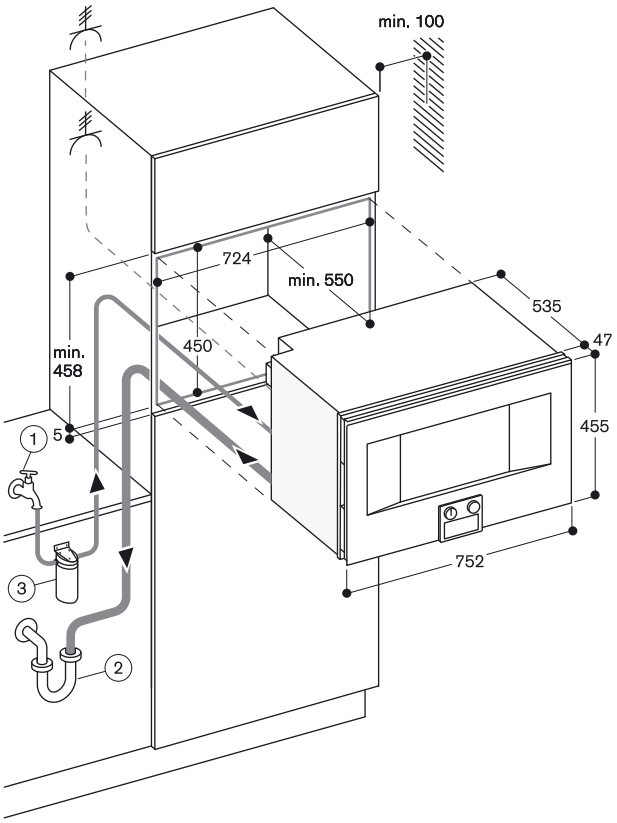

Drainage connection

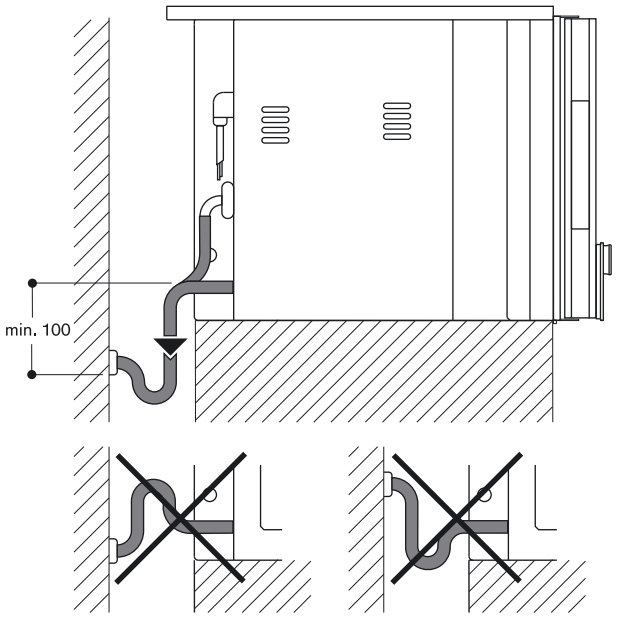

Side view of BS 484/485 above BO

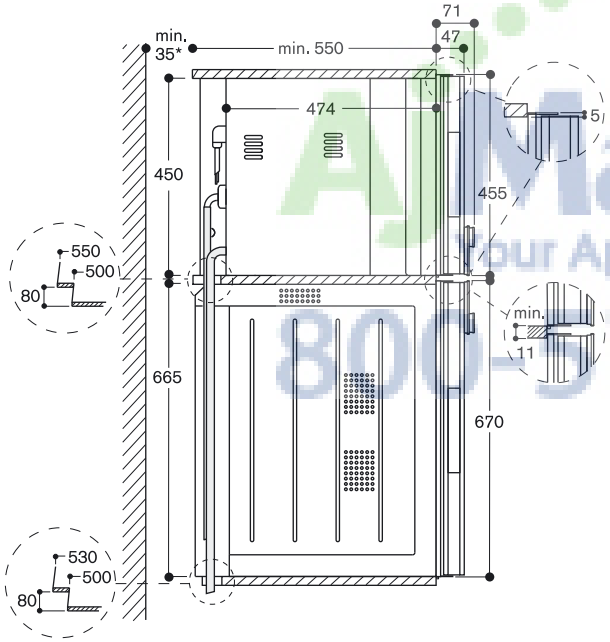

* Only required if the water hoses for the BS steam oven cannot be accommodated in the corner recesses of the appliances.

View from the back

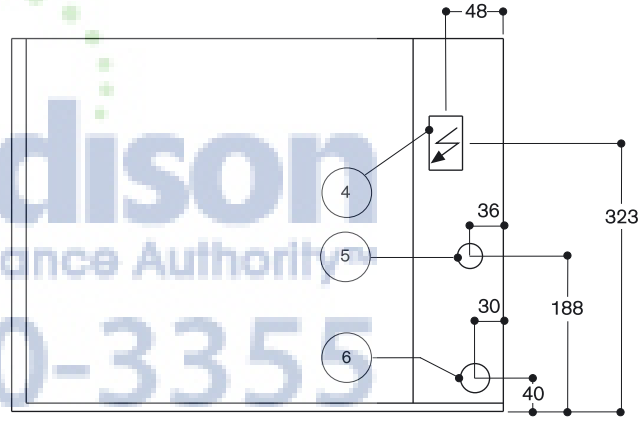

(4) electric terminal box
(5) cold-water connection
(6) water outlet

AJMadison
Your Appliance Authority
800-570-3355

Controls at the top

Right-hinged

BS 470 110▼

Stainless steel-backed full glass door
Width 60 cm

Left-hinged

BS 471 110▼

Stainless steel-backed full glass door
Width 60 cm

Controls at the bottom

Right-hinged

BS 474 110▼

Stainless steel-backed full glass door
Width 60 cm

Left-hinged

BS 475 110▼

Stainless steel-backed full glass door
Width 60 cm

▼ Available 2. quarter 2013

Included in the price

1 Gastronorm insert, stainless steel, GN 2/3 unperforated
1 Gastronorm insert, stainless steel, GN 2/3 perforated
1 wire rack
1 outlet hose (3 m long)
1 water inlet hose (3 m long)
1 plug-in core temperature probe

Installation accessories

BA 476 310▼

Handle bar, stainless steel
Length 447 mm.

GF 111 100▼

Descaling and neutralising filter

GF 121 110▼

Filter cartridge

GZ 010 011

Aqua stop extension (2 m long)
Extends the water inlet and outlet.

Special accessories

GN 114 130

Gastronorm insert, stainless steel, GN 1/3
Unperforated, 40 mm deep, 1.5 l.

GN 114 230

Gastronorm insert, stainless steel, GN 2/3
Unperforated, 40 mm deep, 3 l.

GN 124 130

Gastronorm insert, stainless steel, GN 1/3
Perforated, 40 mm deep, 1.5 l.

GN 124 230

Gastronorm insert, stainless steel, GN 2/3
Perforated, 40 mm deep, 3 l.

GN 340 230

Gastronorm roaster in cast aluminium
GN 2/3, height 165 mm, non-stick

GN 410 130

Gastronorm lid, stainless steel, GN 1/3

GN 410 230

Gastronorm lid, stainless steel, GN 2/3

GR 220 046

Wire rack, chromium-plated
Without opening, with feet.

Combi-steam oven 400 series
BS 470/BS 471/BS 474/BS 475

- Handleless door / automatic door opening
- Fixed inlet and outlet water connection
- Hot air 30 °C to 230 °C can be combined with chosen humidity level of 0%, 30%, 60%, 80% or 100%
- Full surface grill behind glass ceramic for easy cleaning, combinable with circulated air up to 230 °C and steam
- TFT touch display
- Panel-free appliance with surface control module
- Steaming without pressure
- Electronic temperature control from 30 °C to 230 °C
- Core temperature probe, removable
- Net volume 44 litres
- Energy efficiency class A

Heating methods

Hot air + 100 % humidity.
Hot air + 80 % humidity.
Hot air + 60 % humidity.
Hot air + 30 % humidity.
Hot air + 0 % humidity.
Full surface grill + circulated air.
Full surface grill.
Full surface grill level 1 + humidity.
Full surface grill level 2 + humidity.
Dough proofing.
Defrosting.
Regenerating.
Low temperature cooking.

Handling

Automatic door opening.
Rotary knob and TFT touch display operation.
Clear text display in 25 languages.
Option to save individual recipes (incl. core temperature probe).
Information key with use indicators.
Side-opening door opens up to 180° angle.

Features

Full surface grill 2.000 W behind glass ceramic.
Steam removal.
Core temperature probe with automatic shut-off.
Actual temperature display.
Timer functions: cooking time, cooking time end, timer, stopwatch, long-term timer.
Electronic boiling point detection.
Capacity display for filter cartridge (if connected to GF 111 100 descaling system).
60 W halogen light on the side.
Hygienic stainless steel cooking interior.
4 tray levels.

Safety

Child lock.
Safety shut-off.
Cooled housing with temperature protection.

Cleaning

Cleaning aid.
Drying programme.
Descaling aid.
Grease filter, dishwasher-safe.

Planning notes

Door hinge not reversible.
No other electrical appliances should be installed above the BS.

At no point may the outlet hose be positioned higher than the bottom edge of the appliance. The outlet hose must also be at least 100 mm lower than the appliance outlet (see drawing "drain connection").
The outlet hose must not be longer than a maximum of 5 m.
The water connection (1) for the inlet hose must always be accessible and not located directly behind the appliance.
The connection of the outlet hose to the siphon (2) must not be directly behind the appliance and should be accessible.
The descaling system GF 111 100 (3) must be installed when connecting the appliance if the water hardness exceeds 7° dH.
The door panel surface of the appliance extends 47 mm from the furniture cavity.
If the handle (optional accessory) is retrofitted, the outer edge of the door handle extends 94 mm from the furniture cavity.
Consider the overhang, incl. the door handle where applicable, when planning to open drawers next to the appliance.
When planning a corner solution, pay attention to the 90° door opening angle.
To achieve the 550 mm installation depth, the water hoses and connection cable needs to follow the slanted edge on the corner of the housing.
The mains socket needs to be planned outside of the built-in niche.

Please read the installation details regarding air ducting on page 6/7.

Connection

Energy efficiency class A.
Total connected load 2.9 kW.
Only cold water connection.
Inlet hose 3.0 m with 3/4 " connection.
Outlet hose (ø 25 mm) 3.0 m (HT-Hose).
Plan a connection cable.

L	N	⏚

L_1	L_2	N	⏚

AMadison
Your Appliance Authority™
800-570-3355

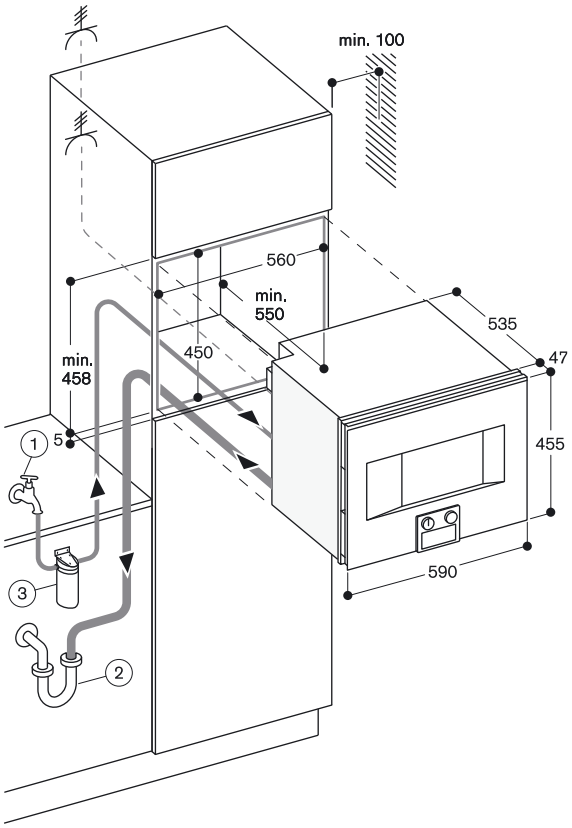

Drainage connection

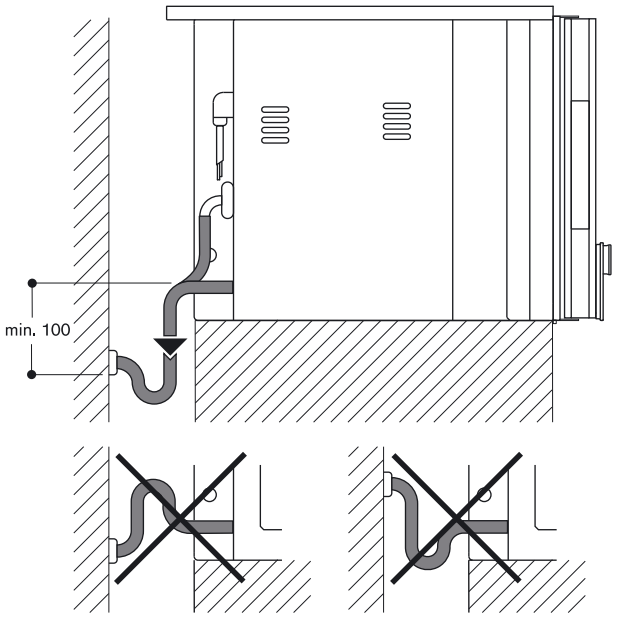

Side view of BS 474/475 above BO

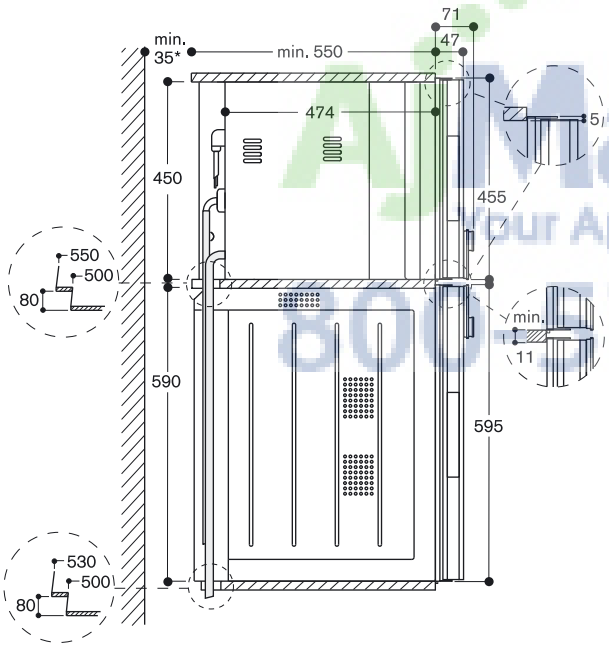

* Only required if the water hoses for the BS steam oven cannot be accommodated in the corner recesses of the appliances.

View from the back

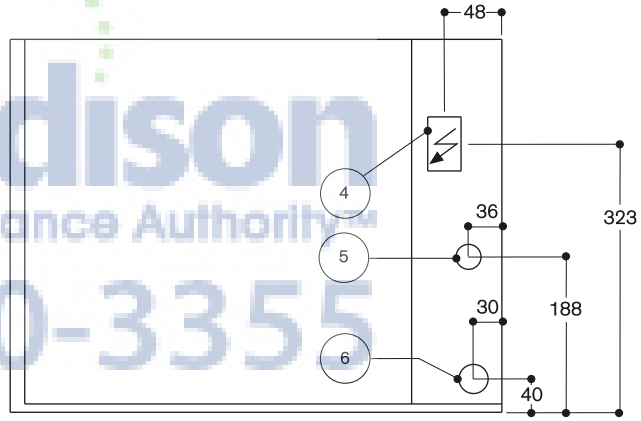

(4) electric terminal box
(5) cold-water connection
(6) water outlet

AMadison
Your Appliance Authority
800-870-3355

Controls at the top

Right-hinged

BS 450 110▼

Stainless steel-backed full glass door

Width 60 cm

Left-hinged

BS 451 110▼

Stainless steel-backed full glass door

Width 60 cm

Controls at the bottom

Right-hinged

BS 454 110▼

Stainless steel-backed full glass door

Width 60 cm

Left-hinged

BS 455 110▼

Stainless steel-backed full glass door

Width 60 cm

▼ Available 2. quarter 2013

Included in the price

1 Gastronorm insert, stainless steel, GN 2/3 unperforated

1 Gastronorm insert, stainless steel, GN 2/3 perforated

1 wire rack

1 plug-in core temperature probe

Installation accessories

BA 476 310▼

Handle bar, stainless steel

Length 447 mm.

Special accessories

GN 114 130

Gastronorm insert, stainless steel, GN 1/3

Unperforated, 40 mm deep, 1.5 l.

GN 114 230

Gastronorm insert, stainless steel, GN 2/3

Unperforated, 40 mm deep, 3 l.

GN 124 130

Gastronorm insert, stainless steel, GN 1/3

Perforated, 40 mm deep, 1.5 l.

GN 124 230

Gastronorm insert, stainless steel, GN 2/3

Perforated, 40 mm deep, 3 l.

GN 340 230

Gastronorm roaster in cast aluminium GN 2/3, height 165 mm, non-stick

GN 410 130

Gastronorm lid, stainless steel, GN 1/3

GN 410 230

Gastronorm lid, stainless steel, GN 2/3

GR 220 046

Wire rack, chromium-plated

Without opening, with feet.

Combi-steam oven 400 series

BS 450/BS 451/BS 454/BS 455

- Handleless door / automatic door opening
- Water tank
- Hot air 30 °C to 230 °C can be combined with chosen humidity level of 0%, 30%, 60%, 80% or 100%
- TFT touch display
- Panel-free appliance with surface control module
- Steaming without pressure
- Electronic temperature control from 30 °C to 230 °C
- Core temperature probe, removable
- Net volume 43 litres
- Energy efficiency class A

Heating methods

Hot air + 100 % humidity.
Hot air + 80 % humidity.
Hot air + 60 % humidity.
Hot air + 30 % humidity.
Hot air + 0 % humidity.
Dough proofing.
Defrosting.
Regenerating.
Low temperature cooking.

Handling

Automatic door opening.
Rotary knob and TFT touch display operation.
Clear text display in 25 languages.
Option to save individual recipes (incl. core temperature probe).
Information key with use indicators.
Side-opening door opens up to 180° angle.

Features

Removable 1.3 litre water tank.
Water level warning.
Core temperature probe with automatic shut-off.
Actual temperature display.
Timer functions: cooking time, cooking time end, timer, stopwatch, long-term timer.
Electronic boiling point detection.
60 W halogen light on the side.
Hygienic stainless steel cooking interior.
4 tray levels.

Safety

Child lock.
Safety shut-off.
Cooled housing with temperature protection.

Cleaning

Cleaning aid.
Drying programme.
Descaling programme.
Grease filter, dishwasher-safe.

Planning notes

Door hinge not reversible.
No other electrical appliances should be installed above the BS.
The door panel surface of the appliance extends 47 mm from the furniture cavity.
If the handle (optional accessory) is retrofitted, the outer edge of the door handle extends 94 mm from the furniture cavity.
Consider the overhang, incl. the door handle where applicable, when planning to open drawers next to the appliance.

When planning a corner solution, pay attention to the 90° door opening angle.
To achieve the 550 mm installation depth, the connection cable needs to follow the slanted edge on the corner of the housing.
The mains socket needs to be planned outside of the built-in niche.

Please read the installation details regarding air ducting on page 6/7.

Connection

Energy efficiency class A.
Total connected load 2.0 kW.
Plan a connection cable.

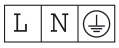

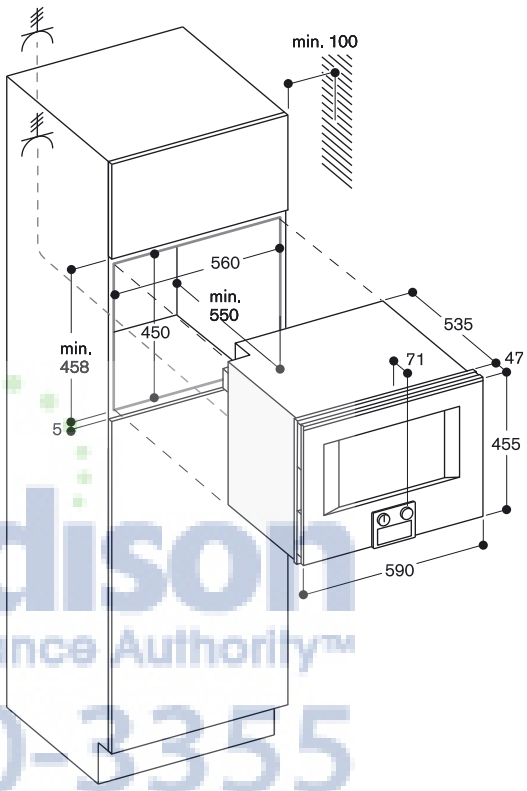

AMadison
Appliance Authority™
800-570-3355

Controls at the top

Right-hinged

BM 450 110▾

Stainless steel-backed full glass door

Width 60 cm

Left-hinged

BM 451 110▾

Stainless steel-backed full glass door

Width 60 cm

Controls at the bottom

Right-hinged

BM 454 110▾

Stainless steel-backed full glass door

Width 60 cm

Left-hinged

BM 455 110▾

Stainless steel-backed full glass door

Width 60 cm

▾ Available 2. quarter 2013

Included in the price

1 combination wire rack

1 glass tub

Installation accessories

BA 476 310▾

Handle bar, stainless steel

Length 447 mm.

Combi-microwave oven 400 series

BM 450/BM 451/BM 454/BM 455

- Handleless door / automatic door opening
- Single operation and combination of microwave, grill and oven
- Sequential operation of up to 5 modes incl. programming of combined operation and rest time
- TFT touch display
- Panel-free appliance with surface control module
- Electronic temperature control
- Interior volume 36 litres

Programmes

Microwave operation with 5 output levels: 1.000, 600, 360, 180, 90 W.
Oven operation with 4 heating methods:
Hot air 40 °C and from 100 °C to 250 °C,
Full surface grill + hot air from 100 °C to 250 °C,
Full surface grill + circulated air from 100 °C to 250 °C
Full surface grill with 3 levels of intensity, maximum output 2.000 W.
Heating methods with microwave output levels 600, 360, 180 and 90 W freely combinable.
15 automatic programmes with weight indication, customisable:
4 defrosting programmes
4 cooking programmes
7 combination programmes
Option to save individual recipes.

Handling

Automatic door opening.
Rotary knob and TFT touch display operation.
Clear text display in 25 languages.
Information key with use indicators.
Side-opening door opens up to 180° angle.

Features

Innowave.
Rapid heating.
4 tray levels.
Actual temperature display.
60 W halogen light on the side.

Safety

Thermally insulated door with triple glazing.
Triple door lock.
Child lock.
Safety shut-off.
Cooled housing with temperature protection.

Cleaning

Hygienic stainless steel interior with glass ceramic base.
Interior back wall with catalytic coating.

Planning notes

Door hinge not reversible.
Plan the niche without back wall.
The door panel surface of the appliance extends 47 mm from the furniture cavity.
If the handle (optional accessory) is retrofitted, the outer edge of the door handle extends 94 mm from the furniture cavity.
Consider the overhang, incl. the door handle where applicable, when planning to open drawers next to the appliance.

When planning a corner solution, pay attention to the 110° door opening angle.
The mains socket needs to be planned outside of the built-in niche.

Please read the installation details regarding air ducting on page 6/7.

Connection

Total connected load 3.1 kW.
Connection cable 1.5 m without plug.

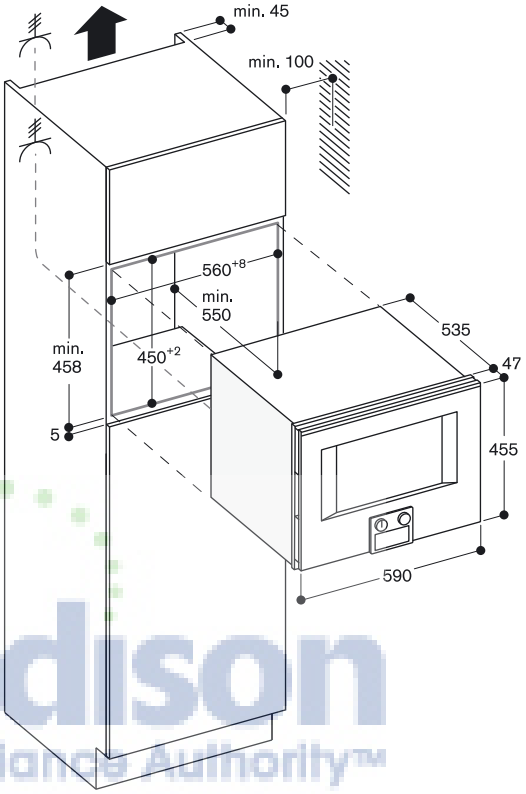

Side view of BM 454/455 above BO

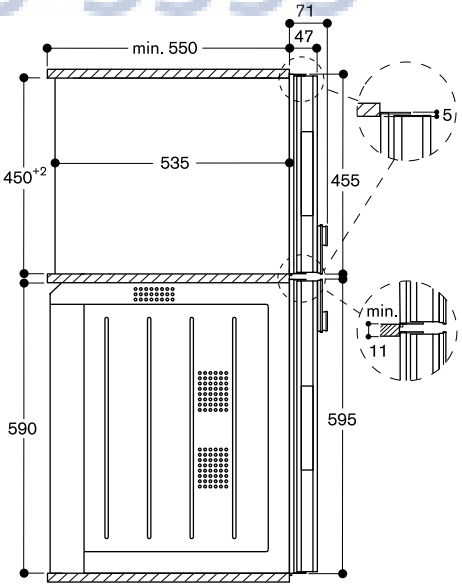

AJ Madison
Your Appliance Authority™
800-570-3355

Controls at the top

CM 450 110▼

Stainless steel-backed glass frontage
Width 60 cm

▼ Available 2. quarter 2013

Included in the price

1 water filter cartridge
1 measuring spoon
1 assembly screws
1 milk container
1 cleaning tablets
1 test strip
1 connection hose for milk frother

Fully automatic espresso machine 400 series

CM 450

- Continuous flow heater means no waiting time and constant brewing temperature
- Aroma brewing technology for a full aroma
- Single portion cleaning
- TFT touch display
- One-touch operation
- Personalisation function
- Seven light settings

Type of beverage

Espresso / 2 x Espresso.
Coffee / 2 x Coffee.
White coffee.
Latte macchiato.
Cappuccino.
Milk froth.
Warm milk.
Hot water.

Handling

Rotary knob and TFT touch display operation.
Clear text display in 25 languages.
Personalisation function, up to 8 beverages can be personalised and memorised.
3 beverage size settings; can be individually adjusted to match the size of the cup.
5 coffee strength levels from mild to extra strong.
3 coffee and hot water temperature levels.
4 grinding level settings.
Height-adjustable coffee dispenser up to 15 cm.
Automatic slide-out function.

Features

Grinding unit with ceramic discs.
Separate container for second ground coffee type.
Water pump with 19 bar pressure.
Double grinding and brewing cycles for extra intensity for one beverage.
Double grinding and brewing cycles for two beverages.
Dispenser with integrated milk system.
Insulated milk container for up to 0.7 litres.
Integrated lighting with 3 LEDs.
Bean container for 1 kg.
Automatic adjustment of ground coffee quantity.
Removable 2.5 litre water tank.
Electronic fill level control for water and coffee beans.
Electronic water filter exchange indicator.
Electronic fill level control for drip tray and container for coffee dregs.

Safety

Child lock.
Safety shut-off.

Cleaning

Fully automatic rinse programme when machine is turned on/off.
Automatic quick rinsing of milk system.
Automatic cleaning and descaling programme.
Removable brewing unit.
Coffee dregs container and drip tray dishwasher-safe.
Milk frother dishwasher-safe.

Planning notes

Ideal installation height 95 cm (top edge of niche bottom), max. 120 cm.
The façade of the appliance extends 47 mm from the furniture cavity.
When installing in a corner a side clearance of 200 mm is required.
Installation directly above 14 cm high WS in 59 cm standardised niche.

Special accessories
(order as spare parts):
Part No. 467873 Water-filter cartridge
Part No. 310967 Descaling tablets
Part No. 310575 Cleaning tablets

Please read the installation details regarding air ducting on page 6/7.

Connection

Total connected load 1.7 kW.
Connection cable 1.5 m with plug.

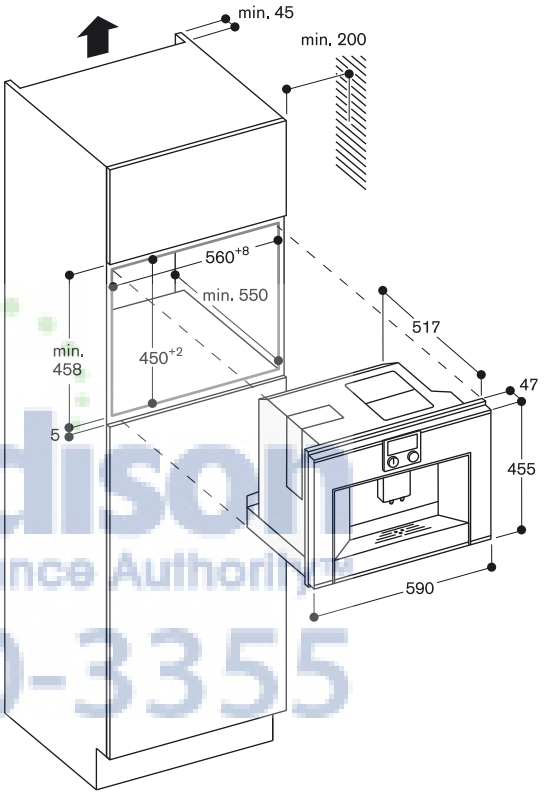

AJMadison
Your Appliance Authority
800-570-3355

WS 482 110▼
Stainless steel-backed glass frontage
Width 76 cm, Height 21 cm

▼ Available 2. quarter 2013

Installation accessories
BA 478 510▼
Handle bar, stainless steel
Length 612 mm.

Warming drawer 400 series
WS 482

- Handleless drawer
- Bright interior light
- Cushioned closing system
- Hygienic stainless steel interior with glass bottom
- 4 power levels in the temperature range 40 °C to 80 °C (glass surface)
- Also for preparing and cooking meals, and for keeping meals warm

Heating methods
Defrosting of meals/proving of yeast dough.
Preheating of small beverage containers.
Keeping meals warm/slow cooking meals.
Warming ovenware.

Handling
Rotary knob operation.
Recessed grip at the front bottom of the drawer.

Features
Net volume 38 litres.
Volume capacity: Dinner service for 10 people including ø 24 cm plates and soup bowls, additional bowls and a serving dish depending on size.
Max. load 25 kg.
Usable interior dimensions
W 606 x H 132 x D 480 mm.
Heating under glass bottom for easy cleaning.
Fan for even heat distribution for fast warming ovenware.
Status display, visible in the glass front.
Glass bottom made of safety glass.

Planning notes
The panel surface of the appliance extends 47 mm from the furniture cavity.
Installation of BO/BS above WS with dimensionally stable intermediate shelf.
Installation of BS above WS in 66.5 cm niche with intermediate floor (gap of 7 mm between WS and BS).
The socket can be planned behind the appliance.

Please read the installation details regarding air ducting on page 6/7.

Connection
Total connected load 0.85 kW.
Connection cable 1.5 m, pluggable.

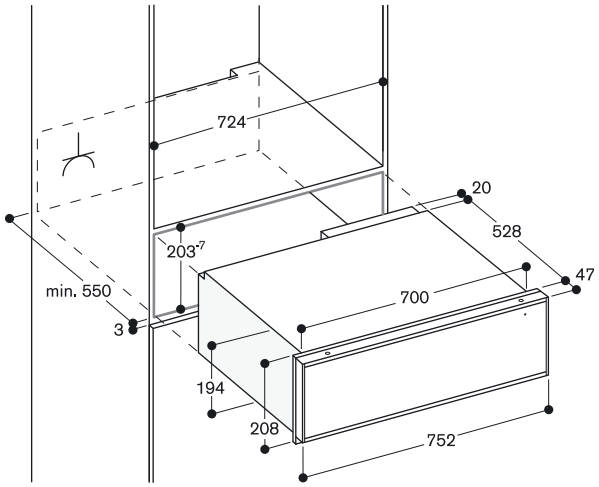

Side view of WS 482 below BO 480

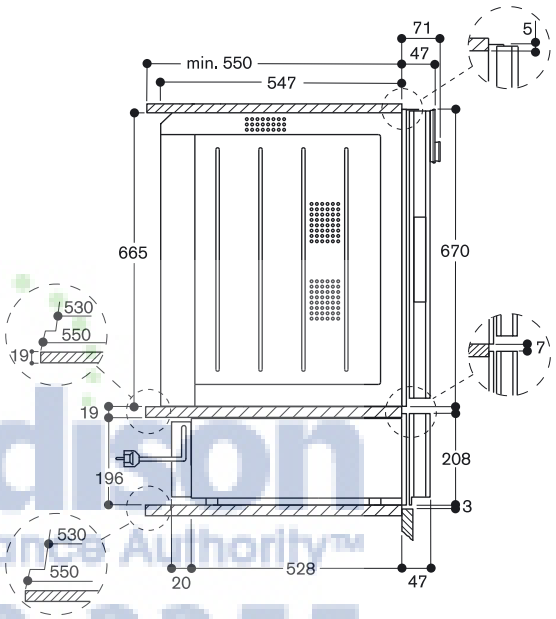

Side view of WS 482 below BS 484

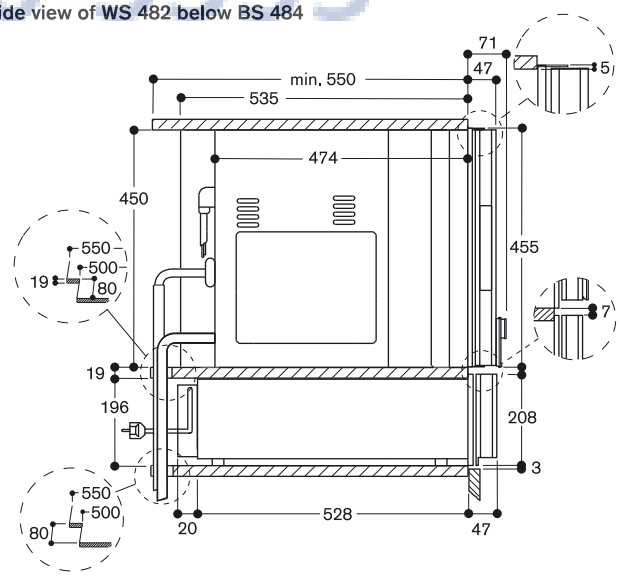

AJMadison
Your Appliance Authority™
800-570-3355

WS 461 110▾
Stainless steel-backed glass frontage
Width 60 cm, Height 14 cm

▾ Available 2. quarter 2013

Installation accessories
BA 476 510▾
Handle bar, stainless steel
Length 450 mm.

Warming drawer 400 series
WS 461

- Handleless drawer
- Bright interior light
- Cushioned closing system
- Hygienic stainless steel interior with glass bottom
- 4 power levels in the temperature range 40 °C to 80 °C (glass surface)
- Also for preparing and cooking meals, and for keeping meals warm

Heating methods
Defrosting of meals/proving of yeast dough.
Preheating of small beverage containers.
Keeping meals warm/slow cooking meals.
Warming ovenware.

Handling
Rotary knob operation.
Recessed grip at the front bottom of the drawer.

Features
Net volume 19 litres.
Volume capacity: Dinner service for 6 people including ø 24 cm plates and soup bowls, additional bowls and a serving dish depending on size.
Max. load 25 kg.
Usable interior dimensions
W 475 x H 86 x D 458 mm.
Heating under glass bottom for easy cleaning.
Fan for even heat distribution for fast warming ovenware.
Status display, visible in the glass front.
Glass bottom made of safety glass.

Planning notes
The panel surface of the appliance extends 47 mm from the furniture cavity.
Installation of BS/BM/CM directly above WS in 59 cm niche without intermediate floor.
The socket can be planned behind the appliance.

Please read the installation details regarding air ducting on page 6/7.

Connection
Total connected load 0.81 kW.
Connection cable 1.5 m, pluggable.

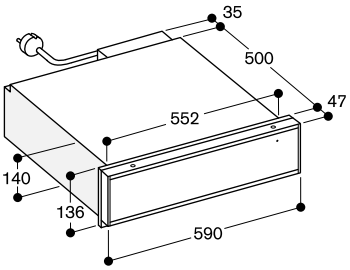

Side view of WS 461 below BS, BM, CM

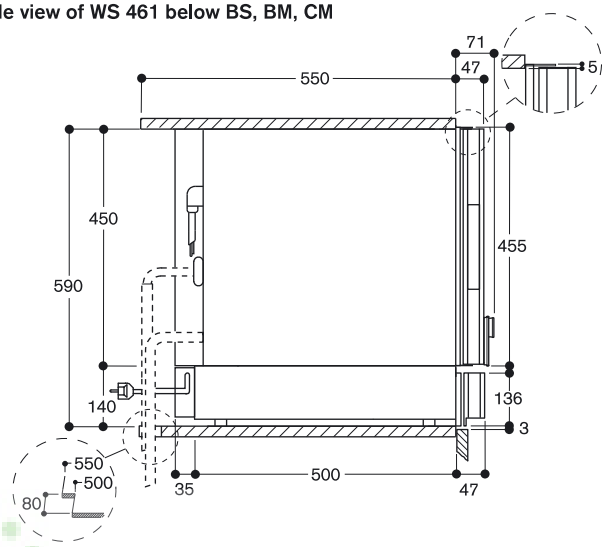

AJMadison
Your Appliance Authority™
800-570-3355

WS 462 110▼
Stainless steel-backed glass frontage
Width 60 cm, Height 29 cm

▼ Available 2. quarter 2013

Installation accessories
BA 476 510▼
Handle bar, stainless steel
Length 450 mm.

Warming drawer 400 series
WS 462

- Handleless drawer
- Bright interior light
- Cushioned closing system
- Hygienic stainless steel interior with glass bottom
- 4 power levels in the temperature range 40 °C to 80 °C (glass surface)
- Also for preparing and cooking meals, and for keeping meals warm

Heating methods
Defrosting of meals/proving of yeast dough.
Preheating of small beverage containers.
Keeping meals warm/slow cooking meals.
Warming ovenware.

Handling
Rotary knob operation.
Recessed grip at the front bottom of the drawer.

Features
Net volume 51 litres.
Volume capacity: Dinner service for 12 people including ø 24 cm plates and soup bowls, additional bowls and a serving dish depending on size.
Max. load 25 kg.
Usable interior dimensions
W 475 x H 236 x D 458 mm.
Heating under glass bottom for easy cleaning.
Fan for even heat distribution for fast warming ovenware.
Status display, visible in the glass front.
Glass bottom made of safety glass.

Planning notes
The panel surface of the appliance extends 47 mm from the furniture cavity.
The socket can be planned behind the appliance.

Please read the installation details regarding air ducting on page 6/7.

Connection
Total connected load 0.81 kW.
Connection cable 1.5 m, pluggable.

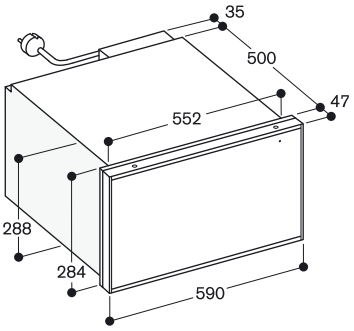

Side view of WS 462 below BO

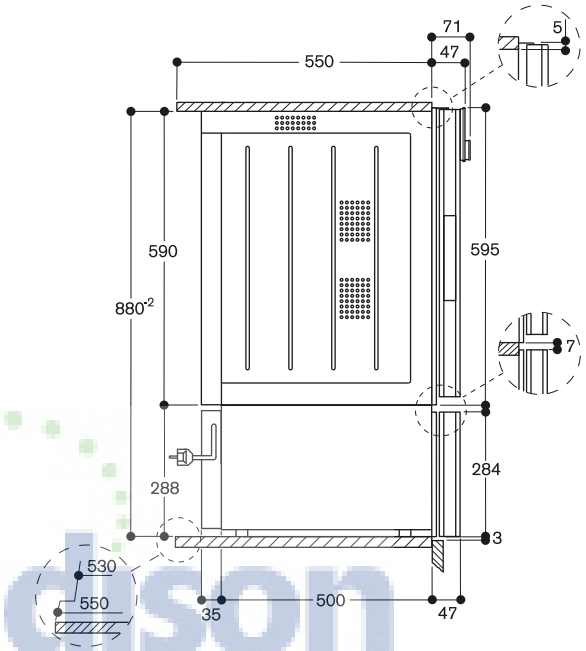

AMadison
Your Appliance Authority™
800-570-3355

BA 016 103
Pull-out system
Fully extendable telescopic rails and enamelled cast iron frame.
BA 018 103
Pull-out system
Fully extendable telescopic rails and enamelled cast iron frame.

BA 026 113
Baking tray, enamelled
15 mm deep.
BA 028 113
Baking tray, enamelled
30 mm deep.

BA 036 103
Wire rack, chromium-plated
Without opening, with feet.
BA 038 103
Wire rack, chromium-plated
Without opening, with feet.

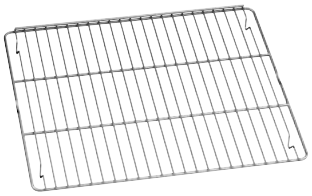

BA 046 113
Glass tray
24 mm deep.

BA 056 113
Heating element for baking stone and Gastronorm roaster
BA 058 113
Heating element for baking stone and Gastronorm roaster

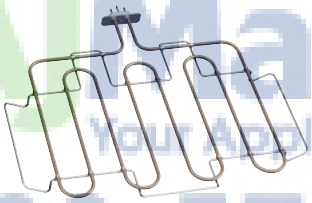

BA 056 133
Baking stone
Incl. baking stone support and pizza paddle (heating element must be ordered separately). Not in combination with pull-out system.
BA 058 133
Baking stone
Incl. baking stone support and pizza paddle (heating element must be ordered separately). Not in combination with pull-out system.

BS 020 002
Pizza paddle, set of 2

BA 026 103
Grill tray, enamelled
30 mm deep.

BA 226 103
Grill tray, enamelled
30 mm deep.

BA 476 110
Handle bar, stainless steel
Length 577 mm.
BA 476 310
Handle bar, stainless steel
Length 447 mm.
BA 478 110
Handle bar, stainless steel
Length 366 mm.
BA 478 310
Handle bar, stainless steel
Length 181 mm.

BA 476 510
Handle bar, stainless steel
Length 450 mm.
BA 478 510
Handle bar, stainless steel
Length 612 mm.

GF 111 100
Descaling and neutralising filter
For first installation.
Descaling system, recommended to be installed if water hardness exceeds 7 °dH or carbon hardness 5 °dH.
Filter head with integrated non-return valve and filter.

GF 121 110
Filter cartridge

AjMadison
Your Appliance Authority™
800-570-3355

GN 114 130
Gastronorm insert, stainless steel, GN 1/3
Unperforated, 40 mm deep, 1.5 l.

GN 114 230
Gastronorm insert, stainless steel, GN 2/3
Unperforated, 40 mm deep, 3 l.

GN 124 130
Gastronorm insert, stainless steel, GN 1/3
Perforated, 40 mm deep, 1.5 l.

GN 124 230
Gastronorm insert, stainless steel, GN 2/3
Perforated, 40 mm deep, 3 l.

GN 340 230
Gastronorm roaster in cast aluminium GN 2/3, height 165 mm, non-stick
For roasting in oven with roasting function or on induction cooktop.
Lower and upper part can also be used separately as casserole or pan, height 100 and 65 mm.
For ovens with pull-out system BA 016 103 or BA 018 103 (order heating element separately) and Combi-steam ovens.
For induction cooktop with ø 28 cm cooking zone. (see also page 348).

GN 410 130
Gastronorm lid, stainless steel, GN 1/3
For stainless steel gastronorm inserts.

GN 410 230
Gastronorm lid, stainless steel, GN 2/3
For stainless steel gastronorm inserts.

GR 220 046
Wire rack, chromium-plated
Without opening, with feet.

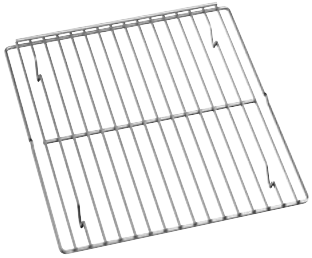

GZ 010 011
Aqua stop extension (2 m long)
Extends the water inlet and outlet.

Advice:
Not every illustrated accessorie fit to every oven. For exact allocation see page 24–27.

AjMadison
Your Appliance Authority™
800-570-3355

Accessories and special accessories 400 series.

BX 480/BX 481

Baking tray, enamelled			**Double oven**
	BA 026 113	15 mm deep	
	BA 028 113	30 mm deep	• (2x)/◦
Pull-out rack			
	BA 016 103	Pull-out system with fully extendable telescopic pull-out rack and pyrolysis-safe cast frame	
	BA 018 103	Pull-out system with fully extendable telescopic pull-out rack and pyrolysis-safe cast frame	◦
Baking stone			
	BA 056 133	incl. baking stone support and pizza paddle (heating element must be ordered separately)	
	BA 058 133	incl. baking stone support and pizza paddle (heating element must be ordered separately)	◦
Gastronorm insert, stainless steel			
	GN 114 130	GN 1/3, unperforated, 40 mm deep, 1.5 l	
	GN 114 230	GN 2/3, unperforated, 40 mm deep, 3 l	
	GN 124 130	GN 1/3, perforated, 40 mm deep, 1.5 l	
	GN 124 230	GN 2/3, perforated, 40 mm deep, 3 l	
	GN 410 130	Gastronorm lid for insert, stainless steel, GN 1/3	
	GN 410 230	Gastronorm lid for insert, stainless steel, GN 2/3	
Gastronorm roaster, cast aluminium			
	GN 340 230	GN 2/3, height 165 mm, non-stick coating Use in ovens with pull-out system BA 018 103 / BA 016 103 and heating element (order separately), as well in Combi-steam ovens (See also page 348)	◦
Glass tray			
	BA 046 113	24 mm deep	
Handle bar, stainless steel			
	BA 476 110	Length 577 mm	
	BA 476 310	Length 447 mm	
	BA 476 510	Length 450 mm	
	BA 478 110	Length 366 mm	
	BA 478 310	Length 181 mm	
	BA 478 510	Length 612 mm	
Wire rack, chromium-plated			
	BA 036 103	no opening, with feet	
	BA 038 103	no opening, with feet	• (2x)/◦
	GR 220 046	no opening, no feet	
	ET-Nr. 672921	for grill trays BA 026 103 / BA 226 103, with opening, and feet	
	ET-Nr. 706321	for grill tray ET-Nr. 687055, with opening and feet	• (2x)/◦
Grill tray, enamelled			
	BA 026 103	with feet and rotisserie spit attachment, 30 mm deep	
	BA 226 103	30 mm deep	
	ET-Nr. 687055	with feet and rotisserie spit attachment, 30 mm deep	• (2x)/◦
Heating element			
	BA 056 113	Required accessory for baking stone BA 056 133	
	BA 058 113	Required accessory for baking stone BA 058 133	◦
Pizza paddle			
	BS 020 002	Set of 2	◦
Cleaning and care			
	ET-Nr. 467873	Water filter cartridge	
	ET-Nr. 310967	Descaling tablets	
	ET-Nr. 310575	Cleaning tablets	
Water connection			
	GF 111 100	Descaling and neutralising filter, for first installation	
	GF 121 110	Filter cartridge for GF 111 100	
	GZ 010 011	Extension for water inlet and outlet hose	

• Standard.
◦ Special accessory.

A Madison Your Appliance Authority™ 800-570-3355

BO 480/BO 481

BO 470/BO 471

BO 450/BO 451

BS 484/BS 485

BS 470/BS 471
BS 474/BS 475

BS 450/BS 451
BS 454/BS 455

Oven	Oven	Oven	Combi-steam oven	Combi-steam oven	Combi-steam oven
	• (2x)/◦	•/◦			
•/◦					
	◦	◦			
◦					
	◦	◦			
◦					
			◦	◦	◦
			•/◦	•/◦	•/◦
			◦	◦	◦
			•/◦	•/◦	•/◦
			◦	◦	◦
			◦	◦	◦
◦	◦	◦	◦	◦	◦
	•/◦	•/◦			
	◦	◦			
				◦	◦
◦					
			◦		
	•/◦	•/◦			
•/◦					
			•/◦	•/◦	•/◦
	•/◦	◦			
•/◦					
	•/◦				
		◦			
•/◦					
	◦	◦			
◦					
◦	◦	◦			
			◦	◦	
			◦	◦	
			◦	◦	

AjMadison
Your Appliance Authority™
800-570-3355

Accessories and special accessories 400 series.

BM 450/BM 451
BM 454/BM 455

			Mikrowellen-Backofen
Baking tray, enamelled			
	BA 026 113	15 mm deep	
	BA 028 113	30 mm deep	
Pull-out rack			
	BA 016 103	Pull-out system with fully extendable telescopic pull-out rack and pyrolysis-safe cast frame	
	BA 018 103	Pull-out system with fully extendable telescopic pull-out rack and pyrolysis-safe cast frame	
Baking stone			
	BA 056 133	incl. baking stone support and pizza paddle (heating element must be ordered separately)	
	BA 058 133	incl. baking stone support and pizza paddle (heating element must be ordered separately)	
Gastronorm insert, stainless steel			
	GN 114 130	GN 1/3, unperforated, 40 mm deep, 1.5 l	
	GN 114 230	GN 2/3, unperforated, 40 mm deep, 3 l	
	GN 124 130	GN 1/3, perforated, 40 mm deep, 1.5 l	
	GN 124 230	GN 2/3, perforated, 40 mm deep, 3 l	
	GN 410 130	Gastronorm lid for insert, stainless steel, GN 1/3	
	GN 410 230	Gastronorm lid for insert, stainless steel, GN 2/3	
Gastronorm roaster, cast aluminium			
	GN 340 230	GN 2/2, height 165 mm, non-stick coating Use in ovens with pull-out system BA 018 103 / BA 016 103 and heating element (order separately), as well in Combi-steam ovens (See also page 348)	
Glass tray			
	BA 046 113	24 mm deep	
Handle bar, stainless steel			
	BA 476 110	Length 577 mm	
	BA 476 310	Length 447 mm	◦
	BA 476 510	Length 450 mm	
	BA 478 110	Length 366 mm	
	BA 478 310	Length 181 mm	
	BA 478 510	Length 612 mm	
Wire rack, chromium-plated			
	BA 036 103	no opening, with feet	
	BA 038 103	no opening, with feet	
	GR 220 046	no opening, no feet	
	ET-Nr. 672921	for grill trays BA 026 103 / BA 226 103, with opening, and feet	
	ET-Nr. 706321	for grill tray ET-Nr. 687055, with opening and feet	
Grill tray, enamelled			
	BA 026 103	with feet and rotisserie spit attachment, 30 mm deep	
	BA 226 103	30 mm deep	
	ET-Nr. 687055	with feet and rotisserie spit attachment, 30 mm deep	
Heating element			
	BA 056 113	Required accessory for baking stone BA 056 133	
	BA 058 113	Required accessory for baking stone BA 058 133	
Pizza paddle			
	BS 020 002	Set of 2	
Cleaning and care			
	ET-Nr. 467873	Water filter cartridge	
	ET-Nr. 310967	Descaling tablets	
	ET-Nr. 310575	Cleaning tablets	
Water connection			
	GF 111 100	Descaling and neutralising filter, for first installation	
	GF 121 110	Filter cartridge for GF 111 100	
	GZ 010 011	Extension for water inlet and outlet hose	

• Standard.
◦ Special accessory.

A Madison Your Appliance Authority™ 800-570-3355

CM 450

Espresso-Vollautomat

WS 482

Wärmeschublade

WS 462
WS 461

Wärmeschublade

◦

◦

AjMadison
Your Appliance Authority™
800-570-3355

•/◦
–/◦
•/◦

Appliance type		Double oven	Oven
Side-opening door right-hinged / left-hinged		BX 480/BX 481	BO 480/BO 481
Stainless steel-backed full glass door		BX 480/481 110[3]	BO 480/481 110[3]
Dimensions			
Width	(cm)	76	76
Appliance dimensions W x H x D[1]	(mm)	752 x 1.428 x 547	752 x 670 x 547
Door panel extension from furniture cavity	(mm)	47	47
Niche dimensions W x H x D	(mm)	724 x 1.425 x 550	724 x 665 x 550
Net weight	(kg)	152	77
Volume / energy efficiency (to EN 50304)			
Net volume	(l)	110 + 110	110
Interior dimensions W x H x D	(cm)	62.4 x 43.5 x 40.3	62.4 x 43.5 x 40.3
Appliance size small / medium / large		–/–/•	–/–/•
Energy efficiency class with hot air		B	B
Energy consumption with top / bottom heat	(kWh)	1.53	1.53
Energy consumption with hot air	(kWh)	1.14	1.14
Cooking time with standard load	(min)	52.3	52.3
Heating methods			
Temperature range	(°C)	30 – 300	30 – 300
Hot air / Eco hot air / top + bottom heat		•/•/•	•/•/•
Top heat / bottom heat / hot air + bottom heat		•/•/•	•/•/•
Top + 1/3 bottom heat		•	•
1/3 top + bottom heat		•	•
Hot air + 1/3 bottom heat		•	•
Full surface grill + circulated air		•	•
Full surface grill		•	•
Compact grill		•	•
Baking stone function		•	•
Roaster function		•	•
Dough proofing / defrosting / keeping warm		•/•/•	•/•/•
Handling			
TFT touch display		•	•
Controls at the top / centered / at the bottom		– /•/–	•/– /–
Automatic door opening		–	•
Clear text display	(No.of languages)	25	25
Individual recipes		–	50
Door opening angle	(°)	180	180
Features			
Electronic temperature control		•	•
Core temperature probe		• (bottom only)	•
Rotisserie spit		• (bottom only)	•
Baking stone socket		•	•
Roasting function		•	•
Actual temperature display		•	•
Rapid heating		•	•
Cooking time, cooking time end, timer, stopwatch		•	•
Long-term timer		•	•
Halogen light on the top	(W)	60 per cooking compartment	60
Halogen light on the side	(W)	10 per cooking compartment	2 x 10
Tray levels	(No.)	5	5
Accessories			
Enamelled baking tray		1 per cooking compartment	1
Size of largest baking tray	(cm²)	1,780	1,780
Wire rack		1 per cooking compartment	1
Enamelled grill tray / wire rack for grill tray		1/1 per cooking compartment	1/1
Glass tray		–	–
Accessories			
Thermally insulated door with multiple glazing		4-fold	4-fold
Child lock / door lock / safety shut-off		•/– /•	•/•/•
Cooled housing with temperature protection		•	•
Cleaning			
Pyrolytic system		•	•
Gaggenau enamel		•	•
Heated air cleaning catalyser		•	•
Connection			
Total connected load	(kW)	9.2	5.52

• Standard. – Not available.

[1] Appliance depth: the immersion depth of the appliance in the niche.

[2] Special accessory, see pages 22–27.

[3] Available 2. quarter 2013.

AjMadison Your Appliance Authority™ 800-570-3355

Oven	Oven
BO 470/BO 471	BO 450/BO 451
BO 470/471 110[3]	BO 450/451 110[3]
60	60
590 x 595 x 547	590 x 595 x 547
47	47
560 x 590 x 550	560 x 590 x 550
64	64
76	76
47.5 x 38.3 x 41.4	47.5 x 38.3 x 41.4
–/–/•	–/–/•
A	A
1.31	1.31
0.97	0.97
46.20	46.20
30 – 300	30 – 300
•/•/•	•/•/•
•/•/•	•/•/•
•	–
•	–
•	–
•	•
•	•
•	•
•	•
•	•
•/•/•	•/•/–
•	•
•/– /–	•/– /–
•	•
25	25
50	50
180	180
•	•
•	•
•	–
•	•
•	•
•	•
•	•
•	•
•	•
60	60
2 x 10	10
4	4
2	1
1,200	1,200
1	1
1/1	BA 226 103[2] /672 921[2]
1	1
4-fold	4-fold
•/•/•	•/•/•
•	•
•	•
•	•
•	•
3.7	3.7

AjMadison
Your Appliance Authority™
800-570-3355

Appliance type		Combi-steam oven	Combi-steam oven
Side-opening door right-hinged / left-hinged		BS 484/BS 485	BS 470/BS 471
Stainless steel-backed full glass door		BS 484/BS 485 110[2]	BS 470/BS 471 110[2]
Dimensions			
Width	(cm)	76	60
Appliance dimensions W x H x D[1]	(mm)	752 x 455 x 535	590 x 455 x 535
Door panel extension from furniture cavity	(mm)	47	47
Niche dimensions W x H x D	(mm)	724 x 450 x 550	560 x 450 x 550
Net weight	(kg)	52	46
Volume / energy efficiency (to EN 50304)			
Net volume	(l)	44	44
Interior dimensions W x H x D	(cm)	35.4 x 24.5 x 49.4	35.4 x 24.5 x 49.4
Appliance size small / medium / large		–/•/–	–/•/–
Energy efficiency class with hot air		A	A
Energy consumption with hot air	(kWh)	0.68	0.68
Cooking time with standard load	(min)	39.8	39.8
Heating methods			
Temperature range	(°C)	30 – 300	30 – 300
Hot air + 100 % humidity		•	•
Hot air + 80 % humidity		•	•
Hot air + 60 % humidity		•	•
Hot air + 30 % humidity		•	•
Hot air + 0 % humidity		•	•
Full surface grill + circulated air		•	•
Full surface grill		•	•
Full surface grill level 1 + humidity		•	•
Full surface grill level 2 + humidity		•	•
Dough proofing / defrosting		•/•	•/•
Regenerating		•	•
Low temperature cooking		•	•
Handling			
TFT touch display		•	•
Controls at the top / at the bottom		– / •	•/–
Automatic door opening		•	•
Clear text display	(No.of languages)	25	25
Individual recipes		50	50
Door opening angle	(°)	180°	180°
Features			
Steaming without pressure		•	•
Electronic temperature control		•	•
Full surface grill behind glass ceramic	(W)	2,000	2,000
Steam removal / misting		•/•	•/•
Core temperature probe		•	•
Actual temperature display		•	•
Cooking time, cooking time end, timer, stopwatch		•	•
Long-term timer		•	•
Electronic boiling point detection		•	•
Capacity display for filter cartridge		•	•
Water tank capacity / water level warning	(l)	– /–	– /–
Halogen light on the side	(W)	60	60
Tray levels / stainless steel cooking interior	(No.)	4 / •	4 / •
Accessories			
Size of largest baking tray	(cm²)	810	810
Wire rack		1	1
Gastronorm insert, stainless steel, GN 2/3, 40 mm, perforated / unperforated		1/1	1/1
Accessories			
Thermally insulated door with multiple glazing		2-fold	2-fold
Child lock / door lock / safety shut-off		•/•/•	•/•/•
Cooled housing with temperature protection		•	•
Cleaning			
Cleaning aid / drying programme		•/•	•/•
Descaling aid / descaling programme		•/–	•/–
Grease filter in front of hot-air fan		•	•
Connection			
Total connected load	(kW)	2.9	2.9
Fixed inlet and outlet water connection		•	•

AjMadison
Your Appliance Authority™
800-570-3355

• Standard. – Not available.

[1] Appliance depth: the immersion depth of the appliance in the niche.

[2] Available 2. quarter 2013.

Combi-steam oven	Combi-steam oven	Combi-steam oven
BS 474/BS 475	BS 450/BS 451	BS 454/BS 455
BS 474/BS 475 110[2]	BS 450/BS 451 110[2]	BS 454/BS 455 110[2]
60	60	60
590 x 455 x 535	590 x 455 x 535	590 x 455 x 535
47	47	47
560 x 450 x 550	560 x 450 x 550	560 x 450 x 550
46	38	38
44	43	43
35.4 x 24.5 x 49.4	35.5 x 29.0 x 40.5	35.5 x 29.0 x 40.5
–/•/–	–/•/–	–/•/–
A	A	A
0.68	0.60	0.60
39.8	37.2	37.2
30 – 300	30 – 300	30 – 300
•	•	•
•	•	•
•	•	•
•	•	•
•	•	•
•	–	–
•	–	–
•	–	–
•	–	–
•/•	•/•	•/•
•	•	•
•	•	•
•	•	•
– /•	•/–	– /•
•	•	•
25	25	25
50	50	50
180°	180°	180°
•	•	•
•	•	•
2,000	–	–
•/•	–/–	–/–
•	•	•
•	•	•
•	•	•
•	•	•
•	•	•
•	–	–
– /–	1.3/•	1.3/•
60	60	60
4 /•	4 /•	4 /•
810	810	810
1	1	1
1/1	1/1	1/1
2-fold	2-fold	2-fold
•/•/•	•/•/•	•/•/•
•	•	•
•/•	•/•	•/•
•/–	–/•	–/•
•	•	•
2.9	2.0	2.0
•	–	–

AjMadison
Your Appliance Authority™
800-570-3355

Appliance type		Combi-microwave oven	Combi-microwave oven
Side-opening door right-hinged / left-hinged		BM 450/BM 451	BM 454/BM 455
Stainless steel-backed full glass door		BM 450/451 110[2]	BM 454/455 110[2]
Dimensions			
Width	(cm)	60	60
Appliance dimensions W x H x D[1]	(mm)	590 x 455 x 580	590 x 455 x 580
Door panel extension from furniture cavity	(mm)	47	47
Niche dimensions W x H x D	(mm)	560 x 450 x 550	560 x 450 x 550
Net weight	(kg)	37	37
Volumen			
Capacity	(l)	36	36
Interior dimensions W x H x D	(mm)	445 x 236 x 348	445 x 236 x 348
Heating methods / Programmes			
Maximum microwave output	(W)	1,000	1,000
Microwave output levels	(No.)	5	5
Hot air with temperature range	(°C)	40, 100 – 250	40, 100 – 250
Full surface grill + hot air with temperature range	(°C)	100 – 250	100 – 250
Full surface grill + circulated air with temperature range	(°C)	100 – 250	100 – 250
Full surface grill as quartz grill with levels of intensity	(No.)	3	3
Maximum grill output	(W)	2,000	2,000
Hot air output	(W)	1,950	1,950
Maximum microwave output for combination with grill and oven	(W)	600	600
Sequential operation of up to 5 modes incl. programming of combined operation and rest time		•	•
Automatic weight feature	(No.)	15	15
Handling			
TFT touch display		•	•
Controls at the top / at the bottom		•/–	–/•
Automatic door opening		•	•
Clear text display	(No.of languages)	25	25
Individual recipes		50	50
Door opening angle		180°	180°
Features			
Electronic temperature control		•	•
Actual temperature display		•	•
Rapid heating		•	•
Innowave		•	•
Cooking time, switch-off time, short-term timer, stop watch		•/•/•/•	•/•/•/•
Long-term timer		•	•
Interior lighting, side	(W)	60	60
Rack levels	(No.)	4	4
Accessories			
Glass tray		•	•
Wire rack		•	•
Glass rod		•	•
Safety			
Thermally insulated door with multiple glazing		•	•
Child lock / safety shut-off		•/•	•/•
Triple door lock		•	•
Cooled housing with temperature protection		•	•
Cleaning			
Catalytic special enamelling at interior back wall		•	•
Stainless steel interior with ceramic base.		•	•
Connection			
Total connected load	(kW)	3.1	3.1

• Standard. – Not available.

[1] Appliance depth: the immersion depth of the appliance in the niche.

[2] Available 2. quarter 2013.

AjMadison
Your Appliance Authority™
800-570-3355

AjMadison
Your Appliance Authority™
800-570-3355

Fully automatic espresso machine 400 series.

Appliance type		Fully automatic espresso machine
Stainless steel-backed glass front		CM 450 110[2]
Dimensions		
Width	(cm)	60
Appliance dimensions W x H x D[1]	(mm)	590 x 455 x 515
Door panel extension from furniture cavity	(mm)	47
Niche dimensions W x H x D	(mm)	560 x 450 x 550
Net weight	(kg)	29
Typ of beverage		
		Espresso / 2 x espresso
		Coffee / 2 x coffee
		White coffee, latte macchiato, cappuccino
		Milk froth, Warm milk
		Hot water
Handling		
TFT touch display		•
Controls at the top		•
Clear text display	(No.of languages)	25
Beverages can be personalised and memorised	(No.)	8
Beverage size settings	(No.)	3
Coffee strength levels	(No.)	5
Coffee and hot water temperature levels	(No.)	3
Height adjustable coffee dispenser up to	(cm)	15
Automatic slide-out function		•
Programmable basic settings		
- Lighting scenarios	(No.)	7
- Adjustablitity of dispensing per type and size of beverage to match the cup size	(h)	•
- Switch-off after	(h)	1 – 12
- Water hardness	(No. of levels)	4
- Water filter		•
Features		
Aroma brewing technology		•
Grinding unit with ceramic discs		•
Automatic adjustment of ground coffee quantity		•
Continuous flow heater		•
Pump pressure	(bar)	19
Integrated milk system		•
Insulated milk container	(l)	0.7
Bean container	(g)	1,000
Separate container for second ground coffee type		•
Grinding level control	(No. of levels)	4
Volume of adjustable brewing chamber	(g)	8 – 10
Double grinding and brewing cycles for extra intensity for one beverage.		•
Double grinding and brewing cycles for two beverages.		•
Removable water tank	(l)	2.5
Water filter cartridge for water tank		1
Single portion cleaning		•
Electronic water filter exchange indicator		•
Electronic fill level control for water and coffee beans		•
Electronic fill level control for drip tray and coffee dregs container		•
Integrated LED lighting		•
Safety		
Child lock / safety shut-off		• / •
Cleaning		
Fully automatic rinse programme when switching on / off		• / •
Automatic quick rinsing of milk system		•
Automatic cleaning and descaling programme		•
Automatic cleaning programme		•
Automatic descaling programme		•
Removable brewing unit		•
Coffee dregs container and drip tray removable and dishwasher-safe		•
Milk frother removable and dishwasher-safe		•
Connection		
Total connected load	(kW)	1.7

• Standard. – Not available.

[1] Appliance depth: the immersion depth of the appliance in the niche.

[2] Available 2. quarter 2013.

AjMadison
Your Appliance Authority™
800-570-3355

AjMadison
Your Appliance Authority™
800-570-3355

Appliance type		Warming drawer	Warming drawer
Stainless steel-backed glass front		WS 482 110[2]	WS 461 110[2]
Dimensions			
Width	(cm)	76	60
Appliance dimensions W x H x D[1]	(mm)	752 x 208 x 548	590 x 140 x 535
Door panel extension from furniture cavity	(mm)	47	47
Niche dimensions W x H x D	(mm)	724 x 203 x 550	560 x 140 x 550
Net weight	(kg)	29	18
Volume			
Net volume	(l)	38	19
Interior dimensions W x H x D	(mm)	606 x 132 x 480	475 x 86 x 458
Number of table settings	(No.)	10	6
Heating methods			
Defrosting of meals / proving of yeast dough		•	•
Preheating of small beverage containers		•	•
Keeping meals warm / slow cooking meals		•	•
Warming ovenware		•	•
Hot air + bottom heat		•	•
Temperature range 40 °C to 80 °C (glass surface)	(power levels)	4	4
Handling			
Rotary knob		•	•
Status display, visible in the glass front		•	•
Handleless drawer		•	•
Recessed grip		•	•
Cushioned closing system		•	•
Features			
Interior light		•	•
Maximum load	(kg)	25	25
Stainless steel interior with glass bottom		•	•
Fan for even heat distribution		•	•
Connection			
Total connected load	(kW)	0.81	0.81

• Standard. – Not available.

[1] Appliance depth: the immersion depth of the appliance in the niche.

[2] Available 2. quarter 2013.

AjMadison
Your Appliance Authority™
800-570-3355

Warming drawer
WS 462 110[2]
60
590 x 288 x 535
47
560 x 288 x 550
23
51
475 x 236 x 458
12
•
•
•
•
•
4
•
•
•
•
•
•
25
•
•
0.81

AjMadison
Your Appliance Authority™
800-570-3355

AjMadison
Your Appliance Authority™
800-570-3355

Ovens 200 series.

Checklist for appliance combinations 200 series. 40

Ovens 200 series. 42

Combi-steam ovens 200 series. 46

Steam ovens 200 series. 47

Combi-microwave ovens 200 series. 48

Microwave ovens 200 series. 49

Fully automatic espresso machines 200 series. 50

Warming drawers 200 series. 51

Accessories / special accessories 200 series. 54

Technical specifications 200 series. 58

AjMadison
Your Appliance Authority™
800-570-3355

Checklist for appliance combinations 200 series.

This check list provides the most relevant parameters for the perfect combination and ordering of ovens, Combi-steam ovens, steam ovens, Combi-microwave ovens, microwaves, fully automatic espresso machines, warming drawers and dishwashers.

When several appliances are listed (BSP/BMP), the first appliance is shown.

Vertical combinations
When planning and ordering please note that

- ☐ The door hinges of the appliances must be on the same side.
- ☐ The door hinge (right-/left-hinged) is not reversible.
- ☐ No further appliances may be fitted above the BS.
- ☐ Only appliances with controls at the top can be installed above a dishwasher. The niche for appliances that are installed above it must be 56 cm wide. The dishwasher is 60 cm wide. A glass door in Gaggenau Anthracite can be obtained as a special accessory.

Horizontal combinations
When planning and ordering please note that

- ☐ The door hinges can be located on either the inside or outside, without the full door opening angle being restricted.
- ☐ The door hinge (right-/left-hinged) cannot be reversed retrospectively.
- ☐ A minimum clearance of 10 mm between the two doors must be observed.
- ☐ Combi-steam ovens, steam ovens, Combi-microwave ovens, microwaves and fully automatic espresso machines in combination with a warming drawer (14 cm in height) have the same total height as a 60 cm wide ovens.

BOP Ovens
BSP Combi-steam ovens/steam ovens
BMP Combi-microwave ovens/ microwaves
CMP Fully automatic espresso machine
WSP Warming drawers
DF Dishwashers

All appliances shown can be obtained in these appliance colors:

Gaggenau Anthrazit

Gaggenau Metallic

Gaggenau Silber

Vertical combination, 60 cm wide appliances

- BSP 250/BSP 220/BMP 250
- BOP 2.0
- WSP 222

- BMP 224
- BOP 2.0
- WSP 222

- BSP 250/BSP 220/BMP 250
- BMP 250
- WSP 221

- BMP 250/BSP 2.0
- CMP 250
- WSP 221

- BMP 224
- CMP 250
- WSP 221

- BOP 2.0
- DF

- BSP 250/BSP 220/BMP 250
- DF

- CMP 250
- DF

AJMadison
Your Appliance Authority™
800-570-3355

Horizontal combination, 60 cm wide appliances

- BOP 2.1

- BOP 2.0

- BO 2.1

- BSP 250/BSP 220/BMP 250
- WSP 221

- BOP 251

- CMP 250
- WSP 221

- BSP 221/BSP 251/ BMP 251
- WSP 221

- BMP 250/BSP 2.0
- WSP 221

- BMP 251/BSP 2.1
- WSP 221

- CMP 250
- WSP 221

- BOP 251

- CMP 250
- WSP 221

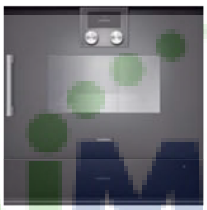

- BSP 250/BSP 220/BMP 250
- WSP 221

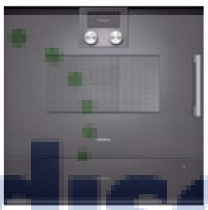

- BMP 251/BSP 2.1
- WSP 221

- CMP 250
- WSP 221

- BSP 250/BSP 220/BMP 250
- WSP 221

- BOP 2.1

- BSP 250/BSP 220/ BMP 250
- WSP 221

- BMP 250/BSP 2.0
- WSP 221

Combination of 4 with warming drawer, 60 cm wide appliances

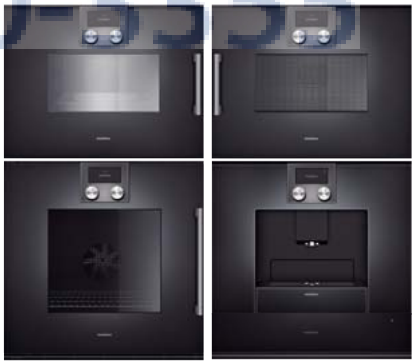

- BSP 251/BSP 221/ BMP 251
- BOP 2.1

- BMP 250/BSP 2.0
- CMP 250
- WSP 221

AjMadison
Your Appliance Authority™
800-570-3355

Controls at the top

Right-hinged

BOP 250 100▼
Full glass door in Gaggenau Anthracite
Width 60 cm

BOP 250 110▼
Full glass door in Gaggenau Metallic
Width 60 cm

BOP 250 130▼
Full glass door in Gaggenau Silver
Width 60 cm

Left-hinged

BOP 251 100▼
Full glass door in Gaggenau Anthracite
Width 60 cm

BOP 251 110▼
Full glass door in Gaggenau Metallic
Width 60 cm

BOP 251 130▼
Full glass door in Gaggenau Silver
Width 60 cm

▼ Available 2. quarter 2013

Included in the price

1 baking tray, enamelled pyrolysis-safe
1 glass tray
1 wire rack
1 plug-in core temperature probe

Special accessories

BA 016 103
Pull-out system
Fully extendable telescopic rails and enamelled cast iron frame.

BA 026 113
Baking tray, enamelled
15 mm deep.

BA 036 103
Wire rack, chromium-plated
Without opening, with feet.

BA 046 113
Glass tray
24 mm deep.

BA 056 113
Heating element for baking stone and Gastronorm roaster

BA 056 133
Baking stone
Incl. baking stone support and pizza paddle (heating element must be ordered separately).

BA 226 103
Grill tray, enamelled
30 mm deep.

BS 020 002
Pizza paddle, set of 2

GN 340 230
Gastronorm roaster in cast aluminium
GN 2/3, height 165 mm, non-stick

Oven 200 series
BOP 250/BOP 251

- Flush installation
- Pyrolytic system
- 13 heating methods, with core temperature probe and baking stone function
- TFT touch display
- Panel-free appliance with surface control module
- Electronic temperature control from 30 °C to 300 °C
- 76 litres net volume
- Energy efficiency class A

Heating methods
Hot air.
Eco hot air.
Top + bottom heat.
Top heat.
Bottom heat.
Hot air + bottom heat.
Full surface grill + circulated air.
Full surface grill.
Compact grill.
Baking stone function.
Roaster function.
Dough proofing.
Defrosting.

Handling
Rotary knob and TFT touch display operation.
Clear text display in 25 languages.
Option to save individual recipes (incl. core temperature probe).
Information key with use indicators.
Side-opening door opens up to 110° angle.

Features
Core temperature probe with automatic shut-off.
Baking stone socket.
Actual temperature display.
Rapid heating.
Timer functions: cooking time, cooking time end, timer, stopwatch, long-term timer.
60 W halogen light on the top.
Enamelled side shelf supports with 4 tray levels, pyrolysis-safe.

Safety
Thermally insulated door with quintuple glazing.
Child lock.
Safety shut-off.
Cooled housing with temperature protection.

Cleaning
Pyrolytic system.
Gaggenau enamel.
Heated air cleaning catalyser.

Planning notes
Door hinge not reversible.
The door panel surface of the appliance extends 21 mm from the furniture cavity.
The outer edge of the door handle extends 72 mm from the furniture cavity.
Necessary lateral gap between appliance door and furniture panel of min. 5 mm.
Consider the overhang, incl. the door handle, when planning to open drawers next to the appliance.
When planning a corner solution, pay attention to the 110° door opening angle.

For installation underneath cooktops: Distance between the underside of the cooktop and the top edge of the oven cavity: min. 15 mm. The planning notes for the cooktops (particularly regarding ventilation, gas/electric connection) must be taken into account.
To achieve the 550 mm installation depth, the connection cable needs to follow the slanted edge on the corner of the housing.
The mains socket needs to be planned outside of the built-in niche.

Please read the installation details regarding air ducting on page 6/7.

Connection
Energy efficiency class A.
Total connected load 3.7 kW.
Plan a connection cable.

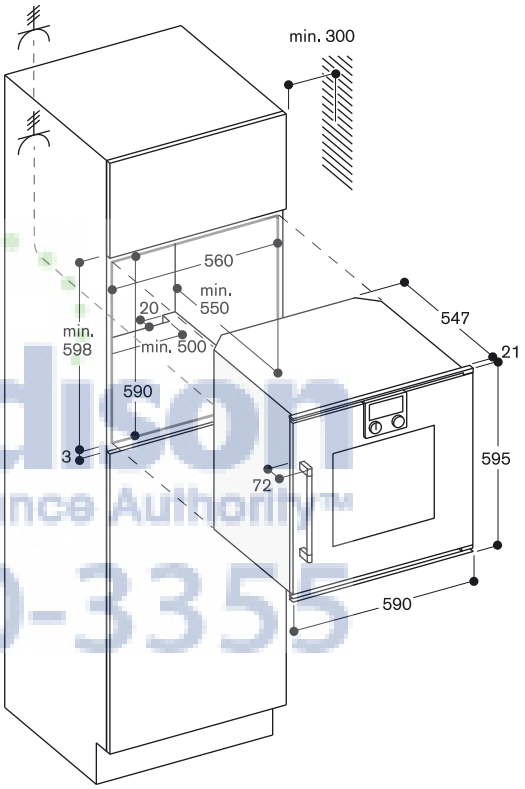

AiMadison
Kitchen Appliance Authority
800-370-3355

Controls at the top

Right-hinged

BOP 240 100▾
Full glass door in Gaggenau Anthracite
Width 60 cm

BOP 240 110▾
Full glass door in Gaggenau Metallic
Width 60 cm

BOP 240 130▾
Full glass door in Gaggenau Silver
Width 60 cm

Left-hinged

BOP 241 100▾
Full glass door in Gaggenau Anthracite
Width 60 cm

BOP 241 110▾
Full glass door in Gaggenau Metallic
Width 60 cm

BOP 241 130▾
Full glass door in Gaggenau Silver
Width 60 cm

▾ Available 2. quarter 2013

Included in the price

1 baking tray, enamelled pyrolysis-safe
1 glass tray
1 wire rack
1 plug-in core temperature probe

Special accessories

BA 016 103
Pull-out system
Fully extendable telescopic rails and enamelled cast iron frame.

BA 026 113
Baking tray, enamelled
15 mm deep.

BA 036 103
Wire rack, chromium-plated
Without opening, with feet.

BA 046 113
Glass tray
24 mm deep.

BA 056 113
Heating element for baking stone and Gastronorm roaster

BA 056 133
Baking stone
Incl. baking stone support and pizza paddle (heating element must be ordered separately).

BA 226 103
Grill tray, enamelled
30 mm deep.

BS 020 002
Pizza paddle, set of 2

GN 340 230
Gastronorm roaster in cast aluminium
GN 2/3, height 165 mm, non-stick

Oven 200 series
BOP 240/BOP 241

- Flush installation
- 13 heating methods, with core temperature probe and baking stone function
- TFT touch display
- Panel-free appliance with surface control module
- Electronic temperature control from 30 °C to 300 °C
- 76 litres net volume
- Energy efficiency class A

Heating methods

Hot air.
Eco hot air.
Top + bottom heat.
Top heat.
Bottom heat.
Hot air + bottom heat.
Full surface grill + circulated air.
Full surface grill.
Compact grill.
Baking stone function.
Roaster function.
Dough proofing.
Defrosting.

Handling

Rotary knob and TFT touch display operation.
Clear text display in 25 languages.
Option to save individual recipes (incl. core temperature probe).
Information key with use indicators.
Side-opening door opens up to 110° angle.

Features

Core temperature probe with automatic shut-off.
Baking stone socket.
Actual temperature display.
Rapid heating.
Timer functions: cooking time, cooking time end, timer, stopwatch, long-term timer.
60 W halogen light on the top.
Chromium-plated side shelf supports with 4 tray levels.

Safety

Thermally insulated door with triple glazing.
Child lock.
Safety shut-off.
Cooled housing with temperature protection.

Cleaning

Back wall and ceiling with catalytic coating.
Gaggenau enamel.
Heated air cleaning catalyser.
Grease filter in front of hot air fan.

Planning notes

Door hinge not reversible.
The door panel surface of the appliance extends 21 mm from the furniture cavity.
The outer edge of the door handle extends 72 mm from the furniture cavity.
Necessary lateral gap between appliance door and furniture panel of min. 5 mm.
Consider the overhang, incl. the door handle, when planning to open drawers next to the appliance.
When planning a corner solution, pay attention to the 110° door opening angle.

For installation underneath cooktops: Distance between the underside of the cooktop and the top edge of the oven cavity: min. 15 mm. The planning notes for the cooktops (particularly regarding ventilation, gas/electric connection) must be taken into account.
To achieve the 550 mm installation depth, the connection cable needs to follow the slanted edge on the corner of the housing.
The mains socket needs to be planned outside of the built-in niche.

Please read the installation details regarding air ducting on page 6/7.

Connection

Energy efficiency class A.
Total connected load 3.7 kW.
Plan a connection cable.

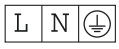

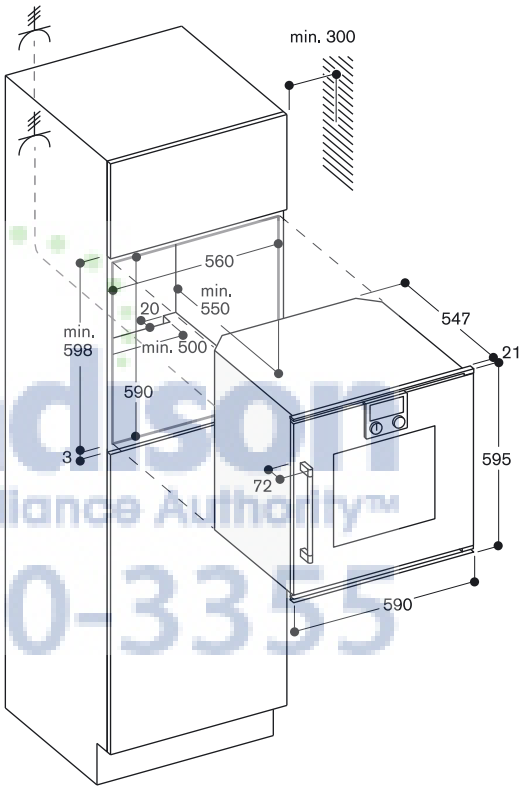

AiMadison
Your Appliance Authority™
800-570-3355

Oven 200 series
BOP 220/BOP 221

- Flush installation
- Pyrolytic system
- 9 heating methods, with baking stone function
- TFT touch display
- Panel-free appliance with surface control module
- Electronic temperature control from 30 °C to 300 °C
- 76 litres net volume
- Energy efficiency class A

Heating methods
Hot air.
Eco hot air.
Top + bottom heat.
Top heat.
Bottom heat.
Hot air + bottom heat.
Full surface grill + circulated air.
Full surface grill.
Baking stone function.

Handling
Rotary knob and TFT touch display operation.
Clear text display in 25 languages.
Option to save individual recipes.
Information key with use indicators.
Side-opening door opens up to 110° angle.

Features
Baking stone socket.
Actual temperature display.
Rapid heating.
Timer functions: cooking time, cooking time end, timer, stopwatch, long-term timer.
60 W halogen light on the top.
Enamelled side shelf supports with 4 tray levels, pyrolysis-safe.

Safety
Thermally insulated door with quintuple glazing.
Child lock.
Safety shut-off.
Cooled housing with temperature protection.

Cleaning
Pyrolytic system.
Gaggenau enamel.
Heated air cleaning catalyser.

Planning notes
Door hinge not reversible.
The door panel surface of the appliance extends 21 mm from the furniture cavity.
The outer edge of the door handle extends 72 mm from the furniture cavity.
Necessary lateral gap between appliance door and furniture panel of min. 5 mm.
Consider the overhang, incl. the door handle, when planning to open drawers next to the appliance.
When planning a corner solution, pay attention to the 110° door opening angle.
For installation underneath cooktops: Distance between the underside of the cooktop and the top edge of the oven cavity: min. 15 mm. The planning notes for the cooktops (particularly regarding ventilation, gas/electric connection) must be taken into account.
To achieve the 550 mm installation depth, the connection cable needs to follow the slanted edge on the corner of the housing.
The mains socket needs to be planned outside of the built-in niche.

Please read the installation details regarding air ducting on page 6/7.

Connection
Energy efficiency class A.
Total connected load 3.7 kW.
Plan a connection cable.

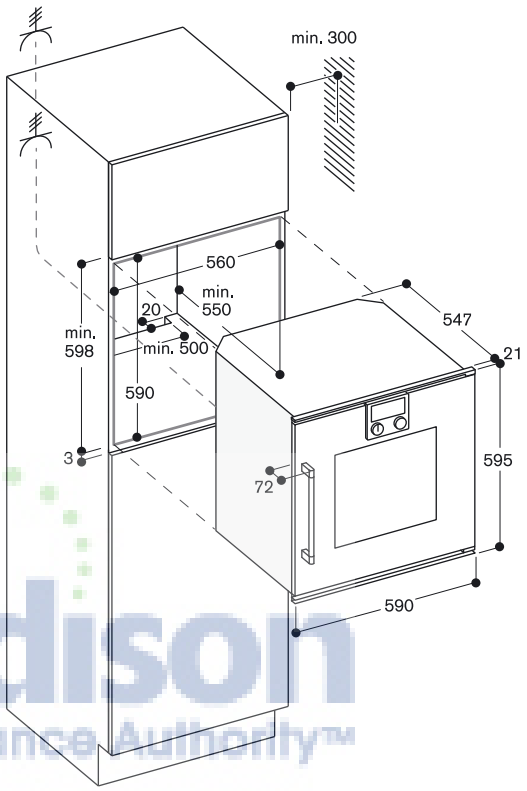

Controls at the top

Right-hinged

BOP 220 100▼
Full glass door in Gaggenau Anthracite
Width 60 cm

BOP 220 110▼
Full glass door in Gaggenau Metallic
Width 60 cm

BOP 220 130▼
Full glass door in Gaggenau Silver
Width 60 cm

Left-hinged

BOP 221 100▼
Full glass door in Gaggenau Anthracite
Width 60 cm

BOP 221 110▼
Full glass door in Gaggenau Metallic
Width 60 cm

BOP 221 130▼
Full glass door in Gaggenau Silver
Width 60 cm

▼ Available 2. quarter 2013

Included in the price
1 baking tray, enamelled pyrolysis-safe
1 glass tray
1 wire rack

Special accessories

BA 016 103
Pull-out system
Fully extendable telescopic rails and enamelled cast iron frame.

BA 026 113
Baking tray, enamelled
15 mm deep.

BA 036 103
Wire rack, chromium-plated
Without opening, with feet.

BA 046 113
Glass tray
24 mm deep.

BA 056 113
Heating element for baking stone and Gastronorm roaster

BA 056 133
Baking stone
Incl. baking stone support and pizza paddle (heating element must be ordered separately).

BA 226 103
Grill tray, enamelled
30 mm deep.

BS 020 002
Pizza paddle, set of 2

GN 340 230
Gastronorm roaster in cast aluminium
GN 2/3, height 165 mm, non-stick

AJMadison
Your Appliance Authority™
800-570-3355

Oven 200 series
BOP 210/BOP 211

- Flush installation
- 9 heating methods, with baking stone function
- TFT touch display
- Panel-free appliance with surface control module
- Electronic temperature control from 30 °C to 300 °C
- 76 litres net volume
- Energy efficiency class A

Heating methods
Hot air.
Eco hot air.
Top + bottom heat.
Top heat.
Bottom heat.
Hot air + bottom heat.
Full surface grill + circulated air.
Full surface grill.
Baking stone function.

Handling
Rotary knob and TFT touch display operation.
Clear text display in 25 languages.
Option to save individual recipes.
Information key with use indicators.
Side-opening door opens up to 110° angle.

Features
Baking stone socket.
Actual temperature display.
Rapid heating.
Timer functions: cooking time, cooking time end, timer, stopwatch, long-term timer.
60 W halogen light on the top.
Chromium-plated side shelf supports with 4 tray levels.

Safety
Thermally insulated door with triple glazing.
Child lock.
Safety shut-off.
Cooled housing with temperature protection.

Cleaning
Gaggenau enamel.
Heated air cleaning catalyser.

Planning notes
Door hinge not reversible.
The door panel surface of the appliance extends 21 mm from the furniture cavity.
The outer edge of the door handle extends 72 mm from the furniture cavity.
Necessary lateral gap between appliance door and furniture panel of min. 5 mm.
Consider the overhang, incl. the door handle, when planning to open drawers next to the appliance.
When planning a corner solution, pay attention to the 110° door opening angle.
For installation underneath cooktops: Distance between the underside of the cooktop and the top edge of the oven cavity: min. 15 mm. The planning notes for the cooktops (particularly regarding ventilation, gas/electric connection) must be taken into account.
To achieve the 550 mm installation depth, the connection cable needs to follow the slanted edge on the corner of the housing.
The mains socket needs to be planned outside of the built-in niche.

Please read the installation details regarding air ducting on page 6/7.

Connection
Energy efficiency class A.
Total connected load 3.7 kW.
Plan a connection cable.

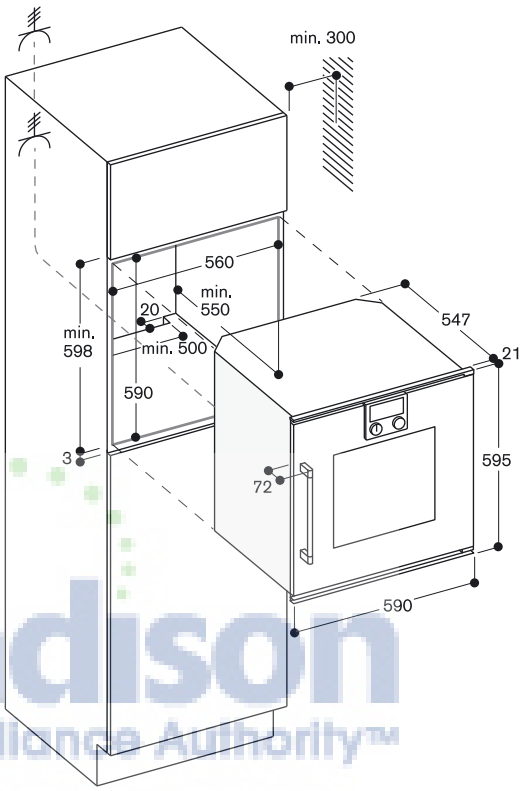

Controls at the top

Right-hinged

BOP 210 100▾
Full glass door in Gaggenau Anthracite
Width 60 cm

BOP 210 110▾
Full glass door in Gaggenau Metallic
Width 60 cm

BOP 210 130▾
Full glass door in Gaggenau Silver
Width 60 cm

Left-hinged

BOP 211 100▾
Full glass door in Gaggenau Anthracite
Width 60 cm

BOP 211 110▾
Full glass door in Gaggenau Metallic
Width 60 cm

BOP 211 130▾
Full glass door in Gaggenau Silver
Width 60 cm

▾ Available 2. quarter 2013

Included in the price
1 baking tray, enamelled pyrolysis-safe
1 wire rack
1 grill tray with wire rack

Special accessories

BA 036 100
Wire rack, chromium-plated
Without opening, with feet.

BA 046 113
Glass tray
24 mm deep.

BA 056 113
Heating element for baking stone and Gastronorm roaster

BA 056 130
Baking stone
Incl. baking stone support and pizza paddle (heating element must be ordered separately).

BA 216 102
Quadruple telescopic pull-out rack

BA 226 100
Grill tray, enamelled
37 mm deep.

BA 226 110
Baking tray, enamelled
24 mm deep.

BS 020 002
Pizza paddle, set of 2

AjMadison
Your Appliance Authority™
800-570-3355

Controls at the top

Right-hinged

BSP 250 100▼
Full glass door in Gaggenau Anthracite
Width 60 cm

BSP 250 110▼
Full glass door in Gaggenau Metallic
Width 60 cm

BSP 250 130▼
Full glass door in Gaggenau Silver
Width 60 cm

Left-hinged

BSP 251 100▼
Full glass door in Gaggenau Anthracite
Width 60 cm

BSP 251 110▼
Full glass door in Gaggenau Metallic
Width 60 cm

BSP 251 130▼
Full glass door in Gaggenau Silver
Width 60 cm

▼ Available 2. quarter 2013

Included in the price

1 Gastronorm insert, stainless steel, GN 2/3 unperforated
1 Gastronorm insert, stainless steel, GN 2/3 perforated
1 wire rack
1 plug-in core temperature probe

Special accessories

GN 114 130
Gastronorm insert, stainless steel, GN 1/3
Unperforated, 40 mm deep, 1.5 l.

GN 114 230
Gastronorm insert, stainless steel, GN 2/3
Unperforated, 40 mm deep, 3 l.

GN 124 130
Gastronorm insert, stainless steel, GN 1/3
Perforated, 40 mm deep, 1.5 l.

GN 124 230
Gastronorm insert, stainless steel, GN 2/3
Perforated, 40 mm deep, 3 l.

GN 340 230
Gastronorm roaster in cast aluminium GN 2/3, height 165 mm, non-stick

GN 410 130
Gastronorm lid, stainless steel, GN 1/3

GN 410 230
Gastronorm lid, stainless steel, GN 2/3

GR 220 046
Wire rack, chromium-plated
Without opening, with feet.

Combi-steam oven 200 series
BSP 250/BSP 251

- Flush installation
- Water tank
- Hot air 30 °C to 230 °C can be combined with chosen humidity level of 0%, 30%, 60%, 80% or 100%
- TFT touch display
- Panel-free appliance with surface control module
- Steaming without pressure
- Electronic temperature control from 30 °C to 230 °C
- Core temperature probe, removable
- Net volume 43 litres
- Energy efficiency class A

Heating methods

Hot air + 100 % humidity.
Hot air + 80 % humidity.
Hot air + 60 % humidity.
Hot air + 30 % humidity.
Hot air + 0 % humidity.
Dough proofing.
Defrosting.
Regenerating.
Low temperature cooking.

Handling

Rotary knob and TFT touch display operation.
Clear text display in 25 languages.
Option to save individual recipes (incl. core temperature probe).
Information key with use indicators.
Side-opening door opens up to 110° angle.

Features

Removable 1.3 litre water tank.
Water level warning.
Core temperature probe with automatic shut-off.
Actual temperature display.
Timer functions: cooking time, cooking time end, timer, stopwatch, long-term timer.
Electronic boiling point detection.
60 W halogen light on the side.
Hygienic stainless steel cooking interior.
4 tray levels.

Safety

Child lock.
Safety shut-off.
Cooled housing with temperature protection.

Cleaning

Cleaning aid.
Drying programme.
Descaling programme.
Grease filter, dishwasher-safe.

Planning notes

Door hinge not reversible.
No other electrical appliances should be installed above the BS.
The door panel surface of the appliance extends 21 mm from the furniture cavity.
The outer edge of the door handle extends 72 mm from the furniture cavity.
Necessary lateral gap between appliance door and furniture panel of min. 5 mm.
Consider the overhang, incl. the door handle, when planning to open drawers next to the appliance.
When planning a corner solution, pay attention to the 110° door opening angle.

To achieve the 550 mm installation depth, the connection cable needs to follow the slanted edge on the corner of the housing.
The mains socket needs to be planned outside of the built-in niche.

Please read the installation details regarding air ducting on page 6/7.

Connection

Energy efficiency class A.
Total connected load 2.0 kW.
Connection cable 1.5 m without plug.

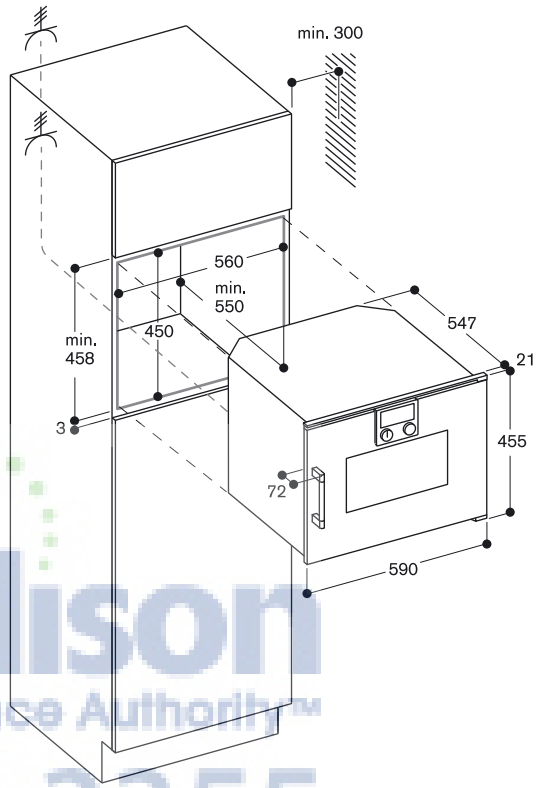

AJMadison
Your Appliance Authority™
800-570-3355

Steam oven 200 Series
BSP 220/BSP 221

- Flush installation
- Water tank
- Steaming without pressure with 100% humidity from 30 °C to 100 °C
- TFT touch display
- Panel-free appliance with surface control module
- Electronic temperature control from 30 °C to 100 °C
- Net volume 43 litres

Controls at the top

Right-hinged

BSP 220 100▾
Full glass door in Gaggenau Anthracite
Width 60 cm

BSP 220 110▾
Full glass door in Gaggenau Metallic
Width 60 cm

BSP 220 130▾
Full glass door in Gaggenau Silver
Width 60 cm

Left-hinged

BSP 221 100▾
Full glass door in Gaggenau Anthracite
Width 60 cm

BSP 221 110▾
Full glass door in Gaggenau Metallic
Width 60 cm

BSP 221 130▾
Full glass door in Gaggenau Silver
Width 60 cm

▾ Available 2. quarter 2013

Included in the price

1 Gastronorm insert, stainless steel, GN 2/3 unperforated
1 Gastronorm insert, stainless steel, GN 2/3 perforated
1 wire rack

Special accessories

GN 114 130
Gastronorm insert, stainless steel, GN 1/3
Unperforated, 40 mm deep, 1.5 l.

GN 114 230
Gastronorm insert, stainless steel, GN 2/3
Unperforated, 40 mm deep, 3 l.

GN 124 130
Gastronorm insert, stainless steel, GN 1/3
Perforated, 40 mm deep, 1.5 l.

GN 124 230
Gastronorm insert, stainless steel, GN 2/3
Perforated, 40 mm deep, 3 l.

GN 340 230
Gastronorm roaster in cast aluminium GN 2/3, height 165 mm, non-stick

GN 410 130
Gastronorm lid, stainless steel, GN 1/3

GN 410 230
Gastronorm lid, stainless steel, GN 2/3

GR 220 046
Wire rack, chromium-plated
Without opening, with feet.

Heating methods

100 % humidity.
Slow steaming.
Dough proofing.
Defrosting.
Regenerating.
Low temperature steaming.

Handling

Rotary knob and TFT touch display operation.
Clear text display in 25 languages.
Information key with use indicators.
Side-opening door opens up to 110° angle.

Features

Removable 1.3 litre water tank.
Water level warning.
Actual temperature display.
Timer functions: cooking time, cooking time end, timer, stopwatch, long-term timer.
Electronic boiling point detection.
60 W halogen light on the side.
Hygienic stainless steel cooking interior.
4 tray levels.

Safety

Child lock.
Safety shut-off.
Cooled housing with temperature protection.

Cleaning

Cleaning aid.
Descaling programme.

Planning notes

Door hinge not reversible.
No other electrical appliances should be installed above the BS.
The door panel surface of the appliance extends 21 mm from the furniture cavity.
The outer edge of the door handle extends 72 mm from the furniture cavity.
Necessary lateral gap between appliance door and furniture panel of min. 5 mm.
Consider the overhang, incl. the door handle, when planning to open drawers next to the appliance.
When planning a corner solution, pay attention to the 110° door opening angle.
To achieve the 550 mm installation depth, the connection cable needs to follow the slanted edge on the corner of the housing.
The mains socket needs to be planned outside of the built-in niche.

Please read the installation details regarding air ducting on page 6/7.

Connection

Total connected load 1.9 kW.
Connection cable 1.5 m without plug.

L N ⏚

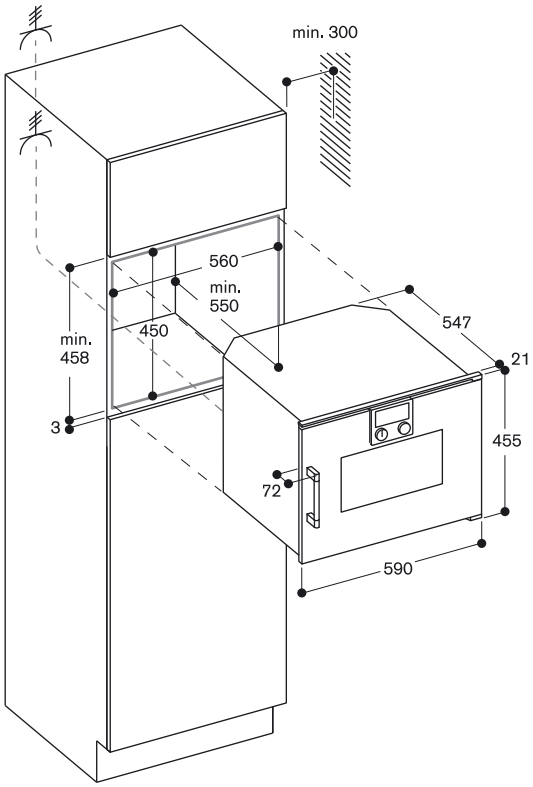

AiMadison
Your Appliance Authority™
800-570-3355

Controls at the top

Right-hinged

BMP 250 100▼
Full glass door in Gaggenau Anthracite
Width 60 cm

BMP 250 110▼
Full glass door in Gaggenau Metallic
Width 60 cm

BMP 250 130▼
Full glass door in Gaggenau Silver
Width 60 cm

Left-hinged

BMP 251 100▼
Full glass door in Gaggenau Anthracite
Width 60 cm

BMP 251 110▼
Full glass door in Gaggenau Metallic
Width 60 cm

BMP 251 130▼
Full glass door in Gaggenau Silver
Width 60 cm

▼ Available 2. quarter 2013

Included in the price

1 combination wire rack
1 glass tub

Combi-microwave oven 200 series
BMP 250/BMP 251

- Flush installation
- Single operation and combination of microwave, grill and oven
- Sequential operation of up to 5 modes incl. programming of combined operation and rest time
- TFT touch display
- Panel-free appliance with surface display module
- Electronic temperature control
- Interior volume 36 litres

Programmes

Microwave operation with 5 output levels: 1.000, 600, 360, 180, 90 W.
Oven operation with 4 heating methods:
Hot air 40 °C and from 100 °C to 250 °C,
Full surface grill + hot air from 100 °C to 250 °C,
Full surface grill + circulated air from 100 °C to 250 °C
Full surface grill with 3 levels of intensity, maximum output 2.000 W.
Heating methods with microwave output levels 600, 360, 180 and 90 W freely combinable.
15 automatic programmes with weight indication, customisable:
4 defrosting programmes
4 cooking programmes
7 combination programmes
Option to save individual recipes.

Handling

Rotary knob and TFT touch display operation.
Clear text display in 25 languages.
Information key with use indicators.
Side-opening door opens up to 110° angle.

Features

Innowave.
Rapid heating.
4 rack levels.
Actual temperature display.
60 W halogen light on the side.

Safety

Thermally insulated door with triple glazing.
Triple door lock.
Child lock.
Safety shut-off.
Cooled housing with temperature protection.

Cleaning

Hygienic stainless steel interior with glass ceramic base.
Interior back wall with catalytic coating.

Planning notes

Door hinge not reversible.
Plan the niche without back wall.
Necessary lateral gap between appliance door and furniture panel of min. 5 mm.
The door panel surface of the appliance extends 21 mm from the furniture cavity.
The outer edge of the door handle extends 72 mm from the furniture cavity.
Consider the overhang, incl. the door handle, when planning to open drawers next to the appliance.
When planning a corner solution, pay attention to the 110° door opening angle.
The mains socket needs to be planned outside of the built-in niche.

Please read the installation details regarding air ducting on page 6/7.

Connection

Total connected load 3.1 kW.
Connection cable 1.5 m without plug.

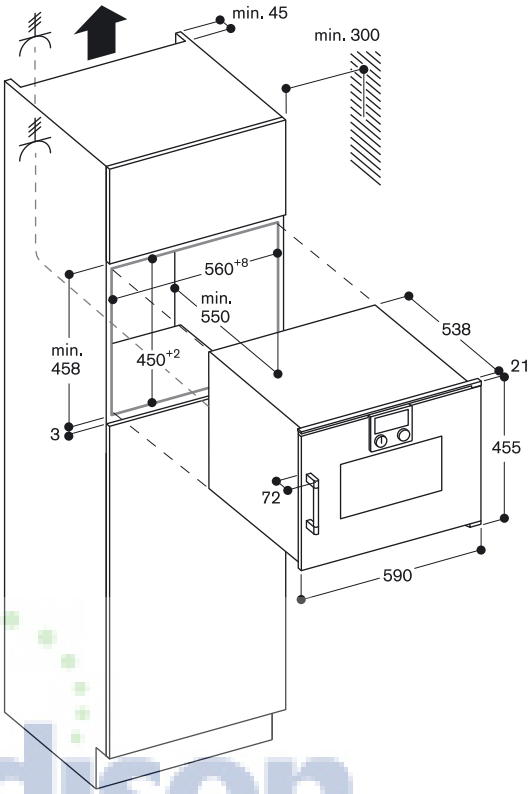

AJMadison
Your Appliance Authority™
800-570-3355

Controls at the bottom

Right-hinged

BMP 224 100▾
Full glass door in Gaggenau Anthracite
Width 60 cm

BMP 224 110▾
Full glass door in Gaggenau Metallic
Width 60 cm

BMP 224 130▾
Full glass door in Gaggenau Silver
Width 60 cm

Left-hinged

BMP 225 100▾
Full glass door in Gaggenau Anthracite
Width 60 cm

BMP 225 110▾
Full glass door in Gaggenau Metallic
Width 60 cm

BMP 225 130▾
Full glass door in Gaggenau Silver
Width 60 cm

▾ Available 2. quarter 2013

Included in the price

1 glass tray
1 wire rack

Microwave oven 200 series
BMP 224/BMP 225

- Flush installation
- Handleless door / automatic door opening
- Single operation and combination of microwave and grill
- Sequential operation of up to 5 modes incl. programming of combined operation and rest time
- TFT touch display
- Electronic temperature control
- Interior volume 21 litres

Programmes

Microwave operation with 5 output levels: 900, 600, 360, 180, 90 W.
Full surface grill with 3 levels of intensity, maximum output 1.300 W.
Full surface grill with microwave output levels 360, 180 and 90 W combinable.
10 automatic programmes with weight indication:
3 defrosting programmes
4 cooking programmes
3 combination programmes
Option to save individual recipes.

Handling

Automatic door opening.
Rotary knob and TFT touch display operation.
Clear text display in 25 languages.
Information key with use indicators.
Side-opening door opens up to 110° angle.

Features

Innowave.
Actual temperature display.
25 W interior light.
Hygienic stainless steel interior with glass ceramic base.

Safety

Thermally insulated door with double glazing.
Triple door lock.
Child lock.
Safety shut-off.
Cooled housing with temperature protection.

Planning notes

Door hinge not reversible.
Minimum installation height 85 cm (top edge of niche bottom).
Height-adjustable feet.
Installation of BMP above BOP with intermediate shelf.
Necessary lateral gap between appliance door and furniture panel of min. 5 mm.
The door panel surface of the appliance extends 21 mm from the furniture cavity.
When planning a corner solution, pay attention to the 90° door opening angle.

Please read the installation details regarding air ducting on page 6/7.

Connection

Total connected load 2.0 kW.
Connection cable 1.5 m, pluggable.

Installation in a wall-hanging cupboard

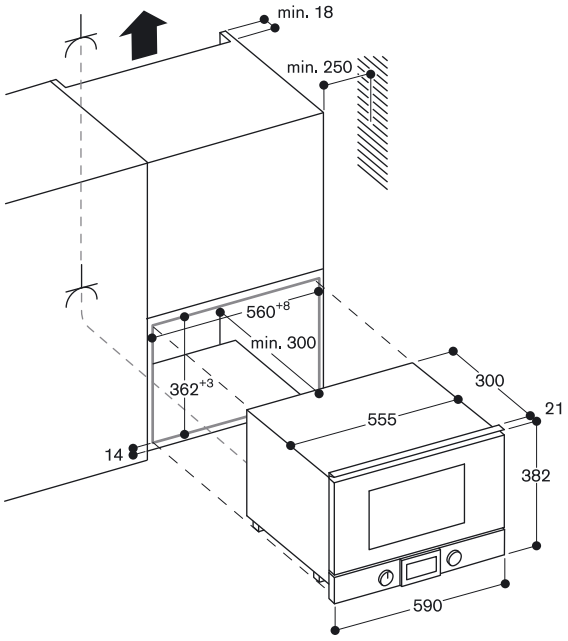

Installation in a tall cupboard

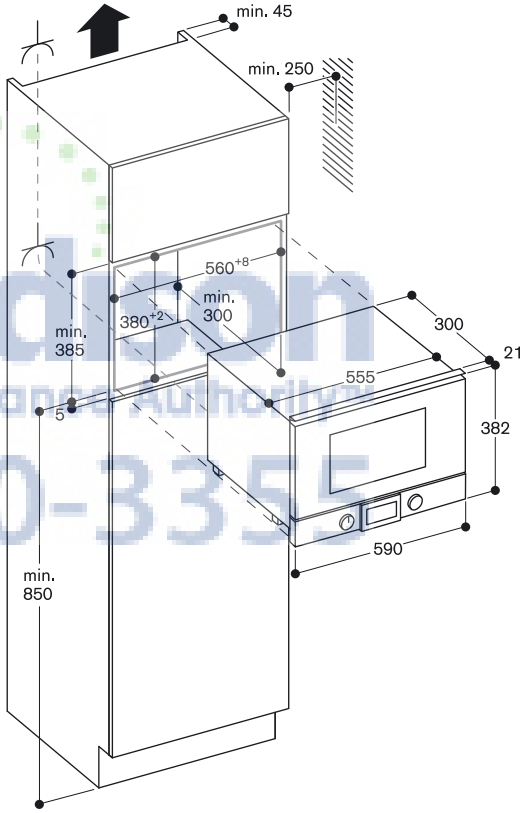

AMadison
Your Appliance Authority
800-570-3355

Controls at the top

CMP 250 100▼
Glass front in Gaggenau Anthracite
Width 60 cm

CMP 250 110▼
Glass front in Gaggenau Metallic
Width 60 cm

CMP 250 130▼
Glass front in Gaggenau Silver
Width 60 cm

▼ Available 2. quarter 2013

Included in the price

1 water filter cartridge
1 measuring spoon
1 assembly screws
1 milk container
1 cleaning tablets
1 test strip
1 connection hose for milk frother
1 Descaling container

Fully automatic espresso machine
200 series
CMP 250

- Flush installation
- Continuous flow heater means no waiting time and constant brewing temperature
- Aroma brewing technology for a full aroma
- Single portion cleaning
- TFT touch display
- One-touch operation
- Personalisation function
- Seven light settings

Type of beverage
Espresso / 2 x Espresso.
Coffee / 2 x Coffee.
White coffee.
Latte macchiato.
Cappuccino.
Milk froth.
Warm milk.
Hot water.

Handling
Rotary knob and TFT touch display operation.
Clear text display in 25 languages.
Personalisation function, up to 8 beverages can be personalised and memorised.
3 beverage size settings; can be individually adjusted to match the size of the cup.
5 coffee strength levels from mild to extra strong.
3 coffee and hot water temperature levels.
4 grinding level settings.
Height-adjustable coffee dispenser up to 15 cm.
Automatic slide-out function.

Features
Grinding unit with ceramic discs.
Separate container for second ground coffee type.
Water pump with 19 bar pressure.
Double grinding and brewing cycles for extra intensity for one beverage.
Double grinding and brewing cycles for two beverages.
Dispenser with integrated milk system.
Insulated milk container for up to 0.55 litres.
Integrated lighting with 3 LEDs.
Bean container for 1 kg.
Automatic adjustment of ground coffee quantity.
Removable 2.5 litre water tank.
Electronic fill level control for water and coffee beans.
Electronic water filter exchange indicator.
Electronic fill level control for drip tray and container for coffee dregs.

Safety
Child lock.
Safety shut-off.

Cleaning
Fully automatic rinse programme when machine is turned on/off.
Automatic quick rinsing of milk system.
Automatic cleaning and descaling programme.
Removable brewing unit.
Coffee dregs container and drip tray dishwasher-safe.
Milk frother dishwasher-safe.

Planning notes
Ideal installation height 95 cm (top edge of niche bottom), max. 120 cm.
Necessary lateral gap between appliance front and furniture panel of min. 5 mm.
The door panel surface of the appliance extends 21 mm from the furniture cavity.
When installing in a corner a side clearance of 200 mm is required.
Installation directly above 14 cm high WS in 59 cm standardised niche.

Special accessories
(order as spare parts):
Part No. 467873 Water-filter cartridge
Part No. 310967 Descaling tablets
Part No. 310575 Cleaning tablets

Please read the installation details regarding air ducting on page 6/7.

Connection
Total connected load 1.7 kW.
Connection cable 1.5 m with plug.

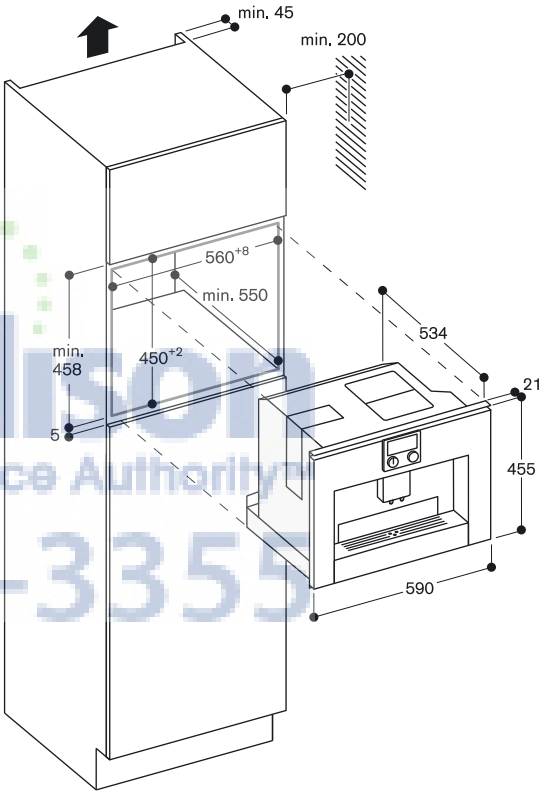

AJMadison
Your Appliance Authority
800-570-3355

WSP 221 100▾
Glass front in Gaggenau Anthracite
Width 60 cm, Height 14 cm

WSP 221 110▾
Glass front in Gaggenau Metallic
Width 60 cm, Height 14 cm

WSP 221 130▾
Glass front in Gaggenau Silver
Width 60 cm, Height 14 cm

▾ Available 2. quarter 2013

Warming drawer 200 series
WSP 221

- Flush installation
- Handleless drawer
- Push-to-open system
- Hygienic stainless steel interior with glass bottom
- 4 power levels in the temperature range 40 °C to 80 °C (glass surface)
- Also for preparing and cooking meals, and for keeping meals warm

Heating methods
Defrosting of meals/proving of yeast dough.
Preheating of small beverage containers.
Keeping meals warm/slow cooking meals.
Warming ovenware.

Handling
Rotary knob operation.

Features
Net volume 20 litres.
Volume capacity: Dinner service for 6 people including ø 24 cm plates and soup bowls, additional bowls and a serving dish depending on size.
Max. load 25 kg.
Usable interior dimensions
W 468 x H 92 x D 458 mm.
Heating under glass bottom for easy cleaning.
Fan for even heat distribution for fast warming ovenware.
Status display, visible in the glass front.
Glass bottom made of safety glass.

Planning notes
Necessary lateral gap between appliance front and furniture panel of min. 5 mm.
The door panel surface of the appliance extends 21 mm from the furniture cavity.
Installation of BSP/BMP/CMP directly above WSP in 59 cm niche without intermediate floor.
The socket can be planned behind the appliance.

Connection
Total connected load 0.81 kW.
Connection cable 1.5 m with plug.

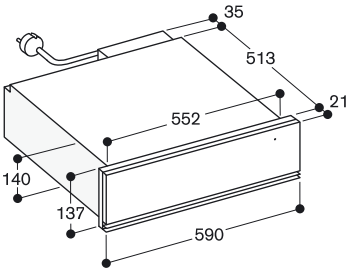

WSP 221 below BSP, BMP, CMP

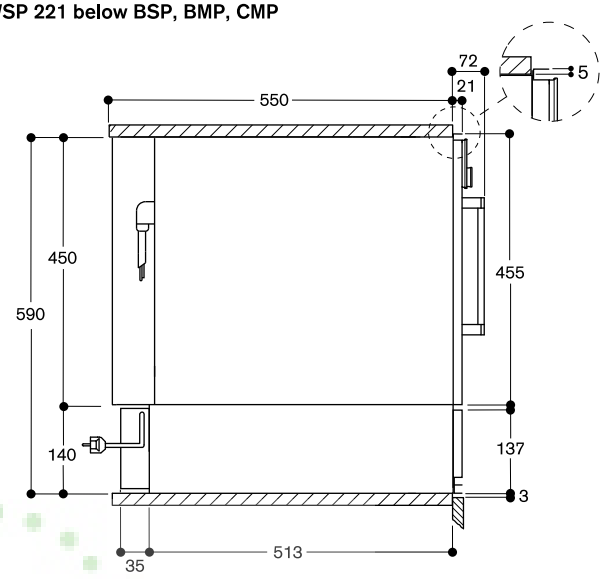

Madison
Your Appliance Authority™
800-570-3355

WSP 222 100▼
Glass front in Gaggenau Anthracite
Width 60 cm, Height 29 cm

WSP 222 110▼
Glass front in Gaggenau Metallic
Width 60 cm, Height 29 cm

WSP 222 130▼
Glass front in Gaggenau Silver
Width 60 cm, Height 29 cm

▼ Available 2. quarter 2013

Warming drawer 200 series
WSP 222

- Flush installation
- Handleless drawer
- Push-to-open system
- Hygienic stainless steel interior with glass bottom
- 4 power levels in the temperature range 40 °C to 80 °C (glass surface)
- Also for preparing and cooking meals, and for keeping meals warm

Heating methods
Defrosting of meals/proving of yeast dough.
Preheating of small beverage containers.
Keeping meals warm/slow cooking meals.
Warming ovenware.

Handling
Rotary knob operation.

Features
Net volume 52 litres.
Volume capacity: Dinner service for 12 people including ø 24 cm plates and soup bowls, additional bowls and a serving dish depending on size.
Max. load 25 kg.
Usable interior dimensions
W 468 x H 242 x D 458 mm.
Heating under glass bottom for easy cleaning.
Fan for even heat distribution for fast warming ovenware.
Status display, visible in the glass front.
Glass bottom made of safety glass.

Planning notes
Necessary lateral gap between appliance front and furniture panel of min. 5 mm.
The door panel surface of the appliance extends 21 mm from the furniture cavity.
The socket can be planned behind the appliance.

Connection
Total connected load 0.81 kW.
Connection cable 1.5 m, pluggable.

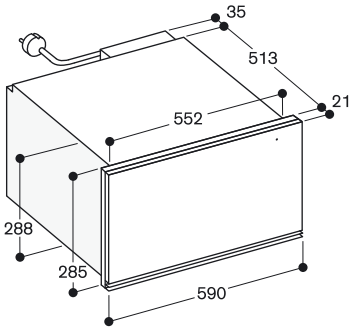

WSP 222 below BOP

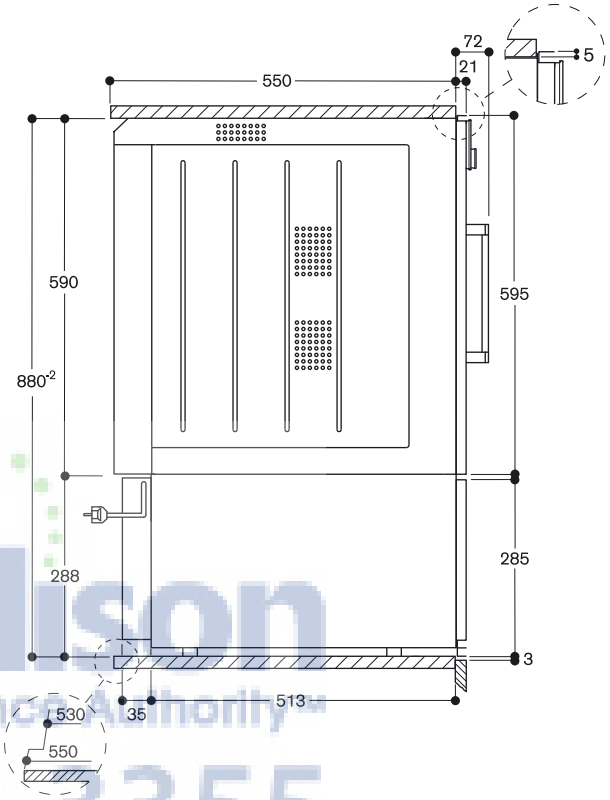

AJMadison
Your Appliance Authority
800-570-3355

AjMadison
Your Appliance Authority™
800-570-3355

BA 016 103
Pull-out system
Fully extendable telescopic rails and enamelled cast iron frame.

BA 026 113
Baking tray, enamelled
15 mm deep.

BA 226 110
Baking tray, enamelled
24 mm deep.

BA 036 100
Wire rack, chromium-plated
Without opening, with feet.

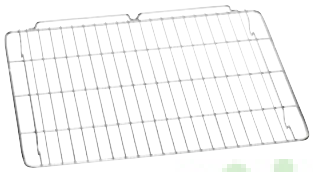

BA 036 103
Wire rack, chromium-plated
Without opening, with feet.

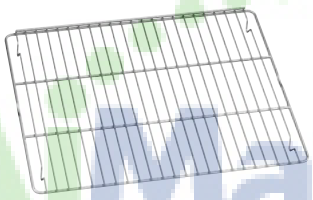

BA 046 113
Glass tray
24 mm deep.

BA 056 113
Heating element for baking stone and Gastronorm roaster.

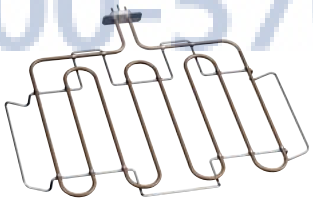

BA 056 130
Baking stone
Incl. baking stone support and pizza paddle (heating element must be ordered separately).
Not in combination with pull-out system.

BA 056 133
Baking stone
Incl. baking stone support and pizza paddle (heating element must be ordered separately).
Not in combination with pull-out system.

BS 020 002
Pizza paddle, set of 2

BA 216 102
Quadruple telescopic pull-out rack

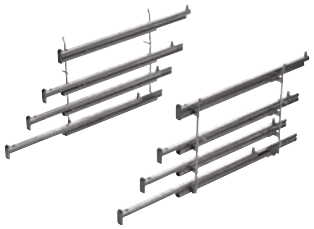

BA 226 100
Grill tray, enamelled
37 mm deep.

BA 226 103
Grill tray, enamelled
30 mm deep.

GN 114 130
Gastronorm insert, stainless steel,
GN 1/3
Unperforated, 40 mm deep, 1.5 l.

GN 114 230
Gastronorm insert, stainless steel,
GN 2/3
Unperforated, 40 mm deep, 3 l.

GN 124 130
Gastronorm insert, stainless steel,
GN 1/3
Perforated, 40 mm deep, 1.5 l.

GN 124 230
Gastronorm insert, stainless steel,
GN 2/3
Perforated, 40 mm deep, 3 l.

GN 340 230
Gastronorm roaster in cast aluminium
GN 2/3, height 165 mm, non-stick
For roasting in oven with roasting function or on induction cooktop.
Lower and upper part can also be used separately as casserole or pan, height 100 and 65 mm.
For ovens with pull-out system BA 016 103 (order heating element separately) and Combi-steam and steam ovens.
For induction cooktop with ø 28 cm cooking zone (see also page 348).

AJMadison
Your Appliance Authority™
800-570-3355

GN 410 130
Gastronorm lid, stainless steel,
GN 1/3
For stainless steel gastronorm inserts.

GN 410 230
Gastronorm lid, stainless steel,
GN 2/3
For stainless steel gastronorm inserts.

GR 220 046
Wire rack, chromium-plated
Without opening, with feet.

Advice:
Not every illustrated accessorie fit to every oven. For exact allocation see page 56/57.

AjMadison
Your Appliance Authority™
800-570-3355

Accessories and special accessories 200 series.

BOP 250/BOP 251

			Oven
Baking tray, enamelled			
	BA 026 113	15 mm deep	•/◦
	BA 226 110	24 mm deep	
Pull-out rack			
	BA 016 103	Pull-out system with fully extendable telescopic pull-out rack and pyrolysis-safe cast frame	◦
	BA 216 102	Quadruple fully extendable telescopic pull-out rack	
Oven surfaces with catalytic special enamelling			
	ET-Nr. 664048	Oven ceiling, for retrofitting	
	ET-Nr. 664248	Oven back wall, for retrofitting	
Baking stone			
	BA 056 130	incl. baking stone support and pizza paddle (heating element must be ordered separately)	
	BA 056 133	incl. baking stone support and pizza paddle (heating element must be ordered separately)	◦
Gastronorm insert, stainless steel			
	GN 114 130	GN 1/3, unperforated, 40 mm deep, 1.5 l	
	GN 114 230	GN 2/3, unperforated, 40 mm deep, 3 l	
	GN 124 130	GN 1/3, perforated, 40 mm deep, 1.5 l	
	GN 124 230	GN 2/3, perforated, 40 mm deep, 3 l	
	GN 410 130	Gastronorm lid for insert, stainless steel, GN 1/3	
	GN 410 230	Gastronorm lid for insert, stainless steel, GN 2/3	
Gastronorm roaster, cast aluminium			
	GN 340 230	GN 2/3, height 165 mm, non-stick coating Use in ovens with pull-out system BA 016 103 and heating element (order separately), as well in Combi-steam and steam ovens (See also page 348)	◦
Glass tray			
	BA 046 113	24 mm deep	•/◦
Wire rack, chromium-plated			
	BA 036 100	no opening, with feet	
	BA 036 103	no opening, with feet	•/◦
	GR 220 046	no opening, no feet	
	ET-Nr. 435794	for grill tray BA 226 100, angled, no opening	
	ET-Nr. 672921	for grill tray BA 226 103, with opening, and feet	◦
Grill tray, enamelled			
	BA 226 100	37 mm deep	
	BA 226 103	30 mm deep	◦
Heating element			
	BA 056 113	Required accessory for baking stone BA 056 133	◦
Pizza paddle			
	BS 020 002	Set of 2	◦
Cleaning and care			
	ET-Nr. 467873	Water filter cartridge	
	ET-Nr. 310967	Descaling tablets	
	ET-Nr. 310575	Cleaning tablets	

• Standard.
◦ Special accessory.

AJMadison
Your Appliance Authority™
800-570-3355

BOP 240/BOP 241

BOP 220/BOP 221

BOP 210/BOP 211

BSP 250/BSP 251

BSP 220/BSP 221

CMP 250

Oven	Oven	Oven	Combi-steam oven	Steam oven	Fully automatic espresso machine
•/◦	•/◦				
		•/◦			
◦	◦				
		◦			
•/◦		◦			
•/◦		◦			
		◦			
◦	◦				
			◦	◦	
			•/◦	•/◦	
			◦	◦	
			•/◦	•/◦	
			◦	◦	
			◦	◦	
◦	◦ (without roaster function)		◦	◦	
•/◦	•/◦	◦			
		•/◦			
•/◦	•/◦				
			•/◦	•/◦	
		◦			
◦	◦				
		•/◦			
◦	◦				
◦	◦	◦			
◦	◦	◦			
					•/◦
					–/◦
					•/◦

AjMadison
Your Appliance Authority™
800-570-3355

Appliance type		Oven	Oven
Side-opening door right-hinged / left-hinged		BOP 250/BOP 251	BOP 240/BOP 241
Full glass door in Gaggenau Anthracite		BOP 250/251 100[3]	BOP 240/241 100[3]
Full glass door in Gaggenau Metallic		BOP 250/251 110[3]	BOP 240/241 110[3]
Full glass door in Gaggenau Silver		BOP 250/251 130[3]	BOP 240/241 130[3]
Dimensions			
Width	(cm)	60	60
Appliance dimensions W x H x D[1]	(mm)	590 x 595 x 547	590 x 595 x 547
Door panel extension from furniture cavity	(mm)	21	21
Niche dimensions W x H x D	(mm)	560 x 590 x 550	560 x 590 x 550
Net weight	(kg)	56	56
Volume / energy efficiency (to EN 50304)			
Net volume	(l)	76	76
Interior dimensions W x H x D	(cm)	48.7 x 38.3 x 40.5	48.7 x 38.3 x 40.5
Appliance size small / medium / large		–/–/•	–/–/•
Energy efficiency class with hot air		A	A
Energy consumption with top / bottom heat	(kWh)	1.31	1.31
Energy consumption with hot air	(kWh)	0.97	0.97
Cooking time with standard load	(min)	50	50
Heating methods			
Temperature range	(°C)	30 – 300	30 – 300
Hot air / Eco hot air / top + bottom heat		•/•/•	•/•/•
Top heat / bottom heat / hot air + bottom heat		•/•/•	•/•/•
Full surface grill + circulated air		•	•
Full surface grill		•	•
Compact grill		•	•
Baking stone function		•	•
Roaster function		•	•
Dough proofing / defrosting / keeping warm		•/•/–	•/•/–
Handling			
TFT touch display		•	•
Controls at the top / at the bottom		•/–	•/–
Clear text display	(No.of languages)	25	25
Individual recipes		50	50
Door opening angle		110°	110°
Features			
Electronic temperature control		•	•
Core temperature probe		•	•
Baking stone socket		•	•
Roasting function		•	•
Actual temperature display		•	•
Rapid heating		•	•
Cooking time, cooking time end, timer, stopwatch		•	•
Long-term timer		•	•
Halogen light on the top	(W)	60	60
Tray levels	(No.)	4	4
Accessories			
Enamelled baking tray		1	1
Size of largest baking tray	(cm²)	1,200	1,200
Wire rack		1	1
Enamelled grill tray / wire rack for grill tray		BA 226 103[2] /672 921[2]	BA 226 103[2] /672 921[2]
Glass tray		1	1
Accessories			
Thermally insulated door with multiple glazing		5-fold	3-fold
Child lock / safety shut-off		•/•	•/•
Cooled housing with temperature protection		•	•
Cleaning			
Pyrolytic system		•	–
Catalytic coating on back wall / ceiling		–	•/•
Gaggenau enamel		•	•
Heated air cleaning catalyser		•	•
Grease filter in front of hot air fan		–	•
Connection			
Total connected load	(kW)	3.7	3.7

• Standard. – Not available.

[1] Appliance depth: the immersion depth of the appliance in the niche.

[2] Special accessory, see pages 54–57.

[3] Available 2. quarter 2013.

AiMadison Your Appliance Authority™ 800-570-3355

Oven	Oven
BOP 220/BOP 221	BOP 210/BOP 211
BOP 220/221 100[3]	BOP 210/211 100[3]
BOP 220/221 110[3]	BOP 210/211 110[3]
BOP 220/221 130[3]	BOP 210/211 130[3]
60	60
590 x 595 x 547	590 x 595 x 547
21	21
560 x 590 x 550	560 x 590 x 550
56	56
76	76
48.7 x 38.3 x 40.5	48.7 x 38.3 x 40.5
–/–/•	–/–/•
A	A
1.31	1.31
0.97	0.97
50	50
30 – 300	30 – 300
•/•/•	•/•/•
•/•/•	•/•/•
•	•
•	•
–	–
•	•
–	–
– /– /–	– /– /–
•	•
•/–	•/–
25	25
50	50
110°	110°
•	•
–	–
•	•
–	–
•	•
•	•
•	•
•	•
60	60
4	4
1	1
1,200	1,350
1	1
BA 226 103[2] /672 921[2]	1/–
1	BA 046 113[2]
5-fold	3-fold
•/•	•/•
•	•
•	–
–	664 248[2] / 664 048[2]
•	•
•	•
–	–
3.7	3.7

AiMadison
Your Appliance Authority™
800-570-3355

Appliance type		Combi-steam oven	Combi-steam oven
Side-opening door right-hinged / left-hinged		BSP 250/BSP 251	BSP 220/BSP 221
Full glass door in Gaggenau Anthracite		BSP 250/BSP 251 100[2]	BSP 220/BSP 221 100[2]
Full glass door in Gaggenau Metallic		BSP 250/BSP 251 110[2]	BSP 220/BSP 221 110[2]
Full glass door in Gaggenau Silver		BSP 250/BSP 251 130[2]	BSP 220/BSP 221 130[2]
Dimensions			
Width	(cm)	60	60
Appliance dimensions W x H x D[1]	(mm)	590 x 455 x 547	590 x 455 x 547
Door panel extension from furniture cavity	(mm)	21	21
Niche dimensions W x H x D	(mm)	560 x 450 x 550	560 x 450 x 550
Net weight	(kg)	37	35
Volume / energy efficiency (to EN 50304)			
Net volume	(l)	43	43
Interior dimensions W x H x D	(cm)	35.5 x 29.0 x 40.5	35.5 x 29.0 x 40.5
Appliance size small / medium / large		–/•/–	–/•/–
Energy efficiency class with hot air		A	
Energy consumption with hot air	(kWh)	0.60	
Cooking time with standard load	(min)	37.2	
Heating methods			
Temperature range	(°C)	30 – 300	30 – 100
Hot air + 100 % humidity		•	–
Hot air + 80 % humidity		•	–
Hot air + 60 % humidity		•	–
Hot air + 30 % humidity		•	–
Hot air + 0 % humidity		•	–
100 % humidity		–	•
Slow steaming		–	•
Dough proofing / defrosting		•/•	•/•
Regenerating		•	•
Low temperature cooking / low temperature steaming		•/–	–/•
Handling			
TFT touch display		•	•
Controls at the top / at the bottom		•/–	•/–
Clear text display	(No.of languages)	25	25
Individual recipes		50	–
Door opening angle		110°	110°
Features			
Steaming without pressure		•	•
Electronic temperature control		•	•
Core temperature probe		•	–
Actual temperature display		•	•
Cooking time, cooking time end, timer, stopwatch		•	•
Long-term timer		•	–
Electronic boiling point detection		•	•
Water tank capacity / water level warning	(l)	1.3/•	1.3/•
Halogen light on the side	(W)	60	60
Tray levels / stainless steel cooking interior	(No.)	4 /•	4 /•
Accessories			
Size of largest baking tray	(cm²)	810	810
Wire rack		1	1
Gastronorm insert, stainless steel, GN 2/3, 40 mm, perforated / unperforated		1/1	1/1
Accessories			
Thermally insulated door with multiple glazing		3-fold	3-fold
Child lock / safety shut-off		•/•	•/•
Cooled housing with temperature protection		•	•
Cleaning			
Cleaning aid / drying programme		•/•	•/–
Descaling aid / descaling programme		–/•	–/•
Grease filter in front of hot-air fan		•	–
Connection			
Total connected load	(kW)	2.0	1.9

• Standard. – Not available.

[1] Appliance depth: the immersion depth of the appliance in the niche.

[2] Available 2. quarter 2013.

AjMadison
Your Appliance Authority™
800-570-3355

AjMadison
Your Appliance Authority™
800-570-3355

Combi-microwave ovens and microwaves 200 series.

Appliance type		Combi-microwave oven	Microwave
Side-opening door right-hinged / left-hinged		BMP 250/BMP 251	BMP 224/BM 225
Full glass door in Gaggenau Anthracite		BMP 250/251 100[2]	BMP 224/225 100[2]
Full glass door in Gaggenau Metallic		BMP 250/251 110[2]	BMP 224/225 110[2]
Full glass door in Gaggenau Silver		BMP 250/251 130[2]	BMP 224/225 130[2]
Dimensions			
Width	(cm)	60	60
Appliance dimensions W x H x D[1]	(mm)	590 x 455 x 559	590 x 382 x 321
Door panel extension from furniture cavity	(mm)	21	21
Niche dimensions W x H x D	(mm)	560 x 450 x 550	560 x 380 x 320
			560 x 362 x 300 (Wall cabinet)
Net weight	(kg)	34	15
Volume			
Capacity	(l)	36	21
Interior dimensions W x H x D	(mm)	445 x 236 x 348	350 x 220 x 270
Heating methods / Programmes			
Maximum microwave output	(W)	1,000	900
Microwave output levels	(Anzahl)	5	5
Hot air with temperature range	(°C)	40, 100 – 250	–
Full surface grill + hot air with temperature range	(°C)	100 – 250	–
Full surface grill + circulated air with temperature range	(°C)	100 – 250	–
Full surface grill as quartz grill with levels of intensity	(Anzahl)	3	3
Maximum grill output	(W)	2,000	1,300
Hot air output	(W)	1,950	–
Maximum microwave output for combination with grill and oven	(W)	600	360
Sequential operation of up to 5 modes incl. programming of combined operation and rest time		•	•
Automatic weight feature	(No.)	15	10
Handling			
TFT touch display		•	•
Controls at the top / at the bottom		•/–	–/•
Automatic door opening		•	•
Clear text display	(Anzahl Sprachen)	25	25
Individual recipes		50	50
Door opening angle		180°	180°
Features			
Electronic temperature control		•	•
Actual temperature display		•	–
Rapid heating		•	–
Innowave		•	•
Cooking time, switch-off time, short-term timer, stop watch		•/•/•/•	•/–/–/–
Long-term timer		•	–
Interior lighting, side	(W)	60	25
Rack levels	(No.)	4	–
Accessories			
Glass tray		•	•
Wire rack		•	•
Glass rod		•	•
Safety			
Thermally insulated door with multiple glazing		•	•
Child lock / safety shut-off		•/•	–/•
Triple door lock		•	•
Cooled housing with temperature protection		•	•
Cleaning			
Catalytic special enamelling at interior back wall		•	–
Stainless steel interior with ceramic base		•	•
Connection			
Total connected load	(kW)	3.1	1.99

• Standard. – Not available.

[1] Appliance depth: the immersion depth of the appliance in the niche.

[2] Available 2. quarter 2013.

AjMadison
Your Appliance Authority™
800-570-3355

AjMadison
Your Appliance Authority™
800-570-3355

Fully automatic espresso machines 200 series.

Appliance type		Fully automatic espresso machine
Glass front in Gaggenau Anthracite		CMP 250 100[2]
Glass front in Gaggenau Metallic		CMP 250 110[2]
Glass front in Gaggenau Silver		CMP 250 130[2]
Dimensions		
Width	(cm)	60
Appliance dimensions W x H x D[1]	(mm)	590 x 455 x 534
Door panel extension from furniture cavity	(mm)	21
Niche dimensions W x H x D	(mm)	560 x 450 x 550
Net weight	(kg)	27
Typ of beverage		
		Espresso / 2 x espresso
		Coffee / 2 x coffee
		White coffee, latte macchiato, cappuccino
		Milk froth, Warm milk
		Hot water
Handling		
TFT touch display		•
Controls at the top		•
Clear text display	(No.of languages)	25
Beverages can be personalised and memorised	(No.)	8
Beverage size settings	(No.)	3
Coffee strength levels	(No.)	5
Coffee and hot water temperature levels	(No.)	3
Height adjustable coffee dispenser up to	(cm)	15
Automatic slide-out function		•
Programmable basic settings		
- Lighting scenarios	(No.)	7
- Adjustablitity of dispensing per type and size of beverage to match the cup size	(h)	•
- Switch-off after	(h)	1 – 12
- Water hardness	(No.)	4
- Water filter		•
Features		
Aroma brewing technology		•
Grinding unit with ceramic discs		•
Automatic adjustment of ground coffee quantity		•
Continuous flow heater		•
Pump pressure	(bar)	19
Integrated milk system		•
Insulated milk container	(l)	0.55
Bean container	(g)	1,000
Separate container for second ground coffee type		•
Grinding level control	(No.)	4
Volume of adjustable brewing chamber	(g)	8 – 10
Double grinding and brewing cycles for extra intensity for one beverage		•
Double grinding and brewing cycles for two beverages		•
Removable water tank	(l)	2.5
Water filter cartridge for water tank		1
Single portion cleaning		•
Electronic water filter exchange indicator		•
Electronic fill level control for water and coffee beans		•
Electronic fill level control for drip tray and coffee dregs container		•
Integrated LED lighting		•
Safety		
Child lock / safety shut-off		• / •
Cleaning		
Fully automatic rinse programme when switching on / off		• / •
Automatic quick rinsing of milk system		•
Automatic cleaning and descaling programme		•
Automatic cleaning programme		•
Automatic descaling programme		•
Removable brewing unit		•
Coffee dregs container and drip tray removable and dishwasher-safe		•
Milk frother removable and dishwasher-safe		•
Connection		
Total connected load	(kW)	1.7

• Standard. – Not available.

[1] Appliance depth: the immersion depth of the appliance in the niche.

[2] Available 2. quarter 2013.

AjMadison
Your Appliance Authority™
800-570-3355

AjMadison
Your Appliance Authority™
800-570-3355

Warming drawers 200 series.

Appliance type		Warming drawer	Warming drawer
Glass front in Gaggenau Anthracite		WSP 221 100[2]	WSP 222 100[2]
Glass front in Gaggenau Metallic		WSP 221 110[2]	WSP 222 110[2]
Glass front in Gaggenau Silver		WSP 221 130[2]	WSP 222 130[2]
Dimensions			
Width	(cm)	60	60
Appliance dimensions W x H x D[1]	(mm)	590 x 140 x 548	590 x 288 x 548
Door panel extension from furniture cavity	(mm)	21	21
Niche dimensions W x H x D	(mm)	560 x 140 x 550	560 x 288 x 550
Net weight	(kg)	16	20
Volume			
Net volume	(l)	20	52
Interior dimensions W x H x D	(mm)	468 x 92 x 458	468 x 242 x 458
Number of table settings	(No.)	6	12
Heating methods			
Defrosting of meals / proving of yeast dough		•	•
Preheating of small beverage containers		•	•
Keeping meals warm / slow cooking meals		•	•
Warming ovenware		•	•
Hot air + bottom heat		•	•
Temperature range 40 °C to 80 °C (glass surface)	(power levels)	4	4
Handling			
Rotary knob		•	•
Status display, visible in the glass front		•	•
Handleless drawer		•	•
Push-to-open system		•	•
Features			
Maximum load	(kg)	25	25
Stainless steel interior with glass bottom		•	•
Fan for even heat distribution		•	•
Connection			
Total connected load	(kW)	0.81	0.81

• Standard. – Not available.

[1] Appliance depth: the immersion depth of the appliance in the niche.

[2] Available 2. quarter 2013.

AjMadison
Your Appliance Authority™
800-570-3355

AjMadison
Your Appliance Authority™
800-570-3355

AjMadison
Your Appliance Authority™
800-570-3355

Ovens EB 388 / EB 385.

EB 388. 70

EB 385. 71

Accessories / special accessories EB 388 / EB 385. 72

Technical specifications EB 388 / 385. 76

AjMadison
Your Appliance Authority™
800-570-3355

EB 388 110
Stainless steel
Width 90 cm

Included in the price
2 baking trays
1 grill tray with wire rack
1 wire rack
1 plug-in core temperature probe

Special accessories
BS 020 002
Pizza paddle, set of 2
DS 070 062
Rotisserie spit
GP 032 062
Grill tray, enamelled
39 mm deep.
GR 030 062
Wire rack, chromium-plated
Angled, no opening.
GR 035 062
Wire rack, chromium-plated
With opening and feet.
KB 032 062
Baking tray, enamelled
18 mm deep.
KB 036 062
Baking tray, enamelled
20 mm deep.
PS 075 001
Baking stone
Incl. heating element, baking stone support and pizza paddle.

Oven
EB 388

- Pyrolytic system
- 11 heating methods, with core temperature probe and baking stone function
- Electronic temperature control from 50 °C to 300 °C
- 78 litres net volume

Heating methods
Hot air.
Hot air + bottom heat.
Full surface grill + hot air.
Full surface grill.
Compact grill.
Bottom heat.
1/3 top + bottom heat.
Top + bottom heat.
Top + 1/3 bottom heat.
Top heat.
Baking stone function.

Handling
Function display.

Features
Core temperature probe with automatic shut-off.
Baking stone socket.
Actual temperature display.
Rapid heating.
Timer functions: cooking time, cooking time end, timer, long-term timer.
100 W halogen light on the top.

Safety
Thermally insulated door with quadruple glazing.
Child lock.
Safety shut-off.
Cooled housing with temperature protection.

Cleaning
Pyrolytic system.
Gaggenau enamel.
Heated air cleaning catalyser.

Planning notes
The mains socket needs to be planned outside the built-in niche.

Connection
Energy efficiency class E.
Total connected load 6.8 kW.
Plan a connection cable.

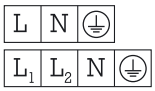

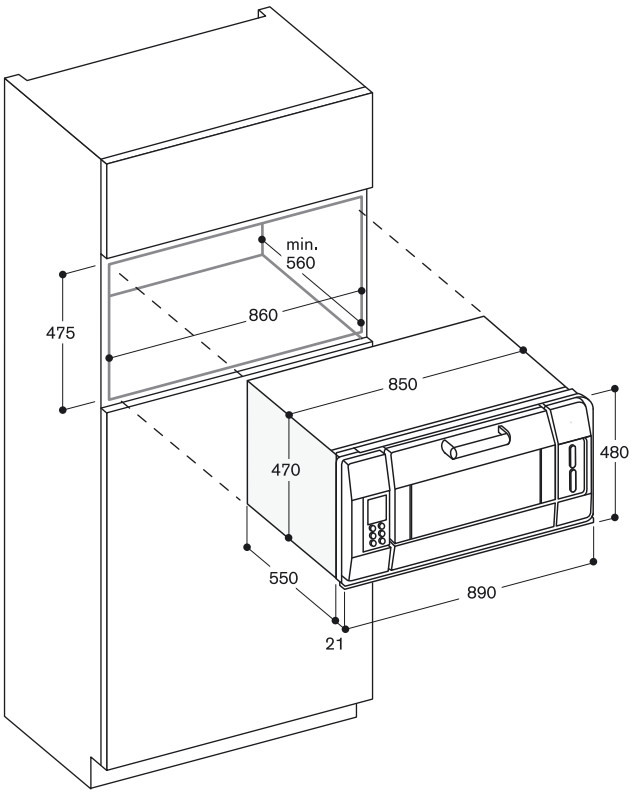

AJMadison
Your Appliance Authority™
800-570-3355

EB 385 110
Stainless steel
Width 90 cm

Included in the price
2 baking trays
1 grill tray with wire rack
1 wire rack
1 plug-in core temperature probe

Special accessories
BS 020 002
Pizza paddle, set of 2
DS 070 062
Rotisserie spit
GP 032 062
Grill tray, enamelled
39 mm deep.
GR 030 062
Wire rack, chromium-plated
Angled, no opening.
GR 035 062
Wire rack, chromium-plated
With opening and feet.
KB 032 062
Baking tray, enamelled
18 mm deep.
KB 036 062
Baking tray, enamelled
20 mm deep.
PS 070 001
Baking stone
Incl. heating element, baking stone support and pizza paddle.

Oven
EB 385

- 11 heating methods, with core temperature probe and baking stone function
- Electronic temperature control from 50 °C to 300 °C
- 78 litres net volume

Heating methods
Hot air.
Hot air + bottom heat.
Full surface grill + hot air.
Full surface grill.
Compact grill.
Bottom heat.
1/3 top + bottom heat.
Top + bottom heat.
Top + 1/3 bottom heat.
Top heat.
Baking stone function.

Handling
Function display.

Features
Core temperature probe with automatic shut-off.
Baking stone socket.
Actual temperature display.
Rapid heating.
Timer functions: cooking time, cooking time end, timer, long-term timer.
100 W halogen light on the top.

Safety
Thermally insulated door with quadruple glazing.
Child lock.
Safety shut-off.
Cooled housing with temperature protection.

Cleaning
Back wall and ceiling with catalytic coating.
Gaggenau enamel.
Heated air cleaning catalyser.
Grease filter in front of hot air fan.

Planning notes
The mains socket needs to be planned outside the built-in niche.

Connection
Energy efficiency class C.
Total connected load 4.8 kW.
Plan a connection cable.

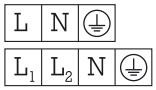

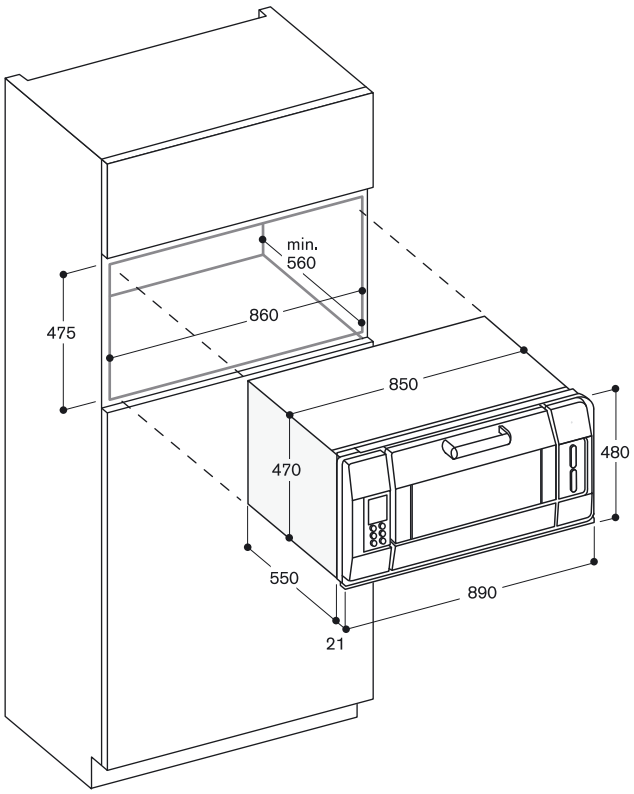

AJ Madison
Your Appliance Authority™
800-570-3355

DS 070 062
Rotisserie spit

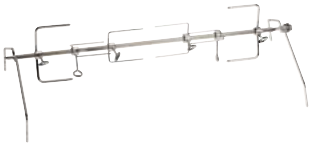

GP 032 062
Grill tray, enamelled
39 mm deep.

GR 030 062
Wire rack, chromium-plated
Angled, no opening.

GR 035 062
Wire rack, chromium-plated
With opening and feet.

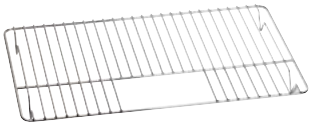

KB 032 062
Baking tray, enamelled
18 mm deep.

KB 036 062
Baking tray, enamelled
20 mm deep.

PS 070 001
Baking stone
Incl. heating element, baking stone support and pizza paddle.

PS 075 001
Baking stone
Incl. heating element, baking stone support and pizza paddle.

BS 020 002
Pizza paddle, set of 2

Advice:
Not every illustrated accessorie fit to every oven. For exact allocation see page 74/75.

AjMadison
Your Appliance Authority™
800-570-3355

AjMadison
Your Appliance Authority™
800-570-3355

Accessories and special accessories EB 388 / EB 385.

EB 388

Baking tray, enamelled			**Oven**
	KB 032 062	18 mm deep	•/◦
	KB 036 062	20 mm deep	•/◦
Baking stone			
	PS 070 001	incl. heating element, baking stone support and pizza paddle	
	PS 075 001	incl. heating element, baking stone support and pizza paddle	◦
Wire rack, chromium-plated			
	GR 030 062	angled, no opening	•/◦
	GR 035 062	for GP 032 with opening and feet	•/◦
Grill tray, enamelled			
	GP 032 062	39 mm deep	•/◦
Pizza paddle			
	BS 020 002	set of 2	◦
Rotisserie spit			
	DS 070 062	Rotisserie spit	◦

• Standard.
◦ Special accessory.

AjMadison
Your Appliance Authority™
800-570-3355

EB 385

Oven
•/◦
•/◦
◦
•/◦
•/◦
•/◦
◦
◦

AjMadison
Your Appliance Authority™
800-570-3355

Appliance type		Oven	Oven
Drop-down door		EB 388	EB 385
Stainless steel		EB 388 110	EB 385 110
Dimensions			
Width	(cm)	90	90
Appliance dimensions W x H x D[1]	(mm)	890 x 480 x 571	890 x 480 x 571
Niche dimensions W x H x D	(mm)	860 x 475 x 560	860 x 475 x 560
Net weight	(kg)	94	84
Volume / energy efficiency (to EN 50304)			
Net volume	(l)	78	78
Interior dimensions W x H x D	(cm)	602 x 337 x 382	602 x 337 x 382
Appliance size small / medium / large		–/–/•	–/–/•
Energy efficiency class with hot air		E	C
Energy consumption with top / bottom heat	(kWh)	1.99	1.48
Energy consumption with hot air	(kWh)	1.79	1.39
Cooking time with standard load	(min)	52.70	41.60
Heating methods			
Temperature range	(°C)	50 – 300	50 – 300
Hot air		•	•
Hot air + bottom heat		•	•
Full surface grill + hot air		•	•
Full surface grill		•	•
Compact grill		•	•
Bottom heat		•	•
1/3 top + bottom heat		•	•
Top + bottom heat		•	•
Top + 1/3 bottom heat		•	•
Top heat		•	•
Baking stone function		•	•
Handling			
Function display		•	•
Features			
Electronic temperature control		•	•
Core temperature probe		•	•
Rotisserie spit		DS 070 062[2]	DS 070 062[2]
Baking stone socket		•	•
Actual temperature display		•	•
Rapid heating		•	•
Cooking time, cooking time end, timer, stopwatch		•	•
Long-term timer		•	•
Halogen light on the top	(W)	100	100
Tray levels	(No.)	4	4
Accessories			
Enamelled baking tray		2	2
Size of largest baking tray	(cm^2)	1,680	1,680
Wire rack		1	1
Enamelled grill tray / wire rack for grill tray		1/1	1/1
Accessories			
Thermally insulated door with multiple glazing		4-fold	4-fold
Child lock / Safety shut-off		•/•	•/•
Cooled housing with temperature protection		•	•
Cleaning			
Pyrolytic system		•	–
Catalytic coating on back wall / ceiling		–/–	•/•
Gaggenau enamel		•	•
Heated air cleaning catalyser		•	•
Grease filter in front of hot air fan		–	•
Connection			
Total connected load	(kW)	6.8	4.8

• Standard. – Not available.

[1] Appliance depth: the immersion depth of the appliance in the niche.

[2] Special accessory, see pages 72–75.

AjMadison
Your Appliance Authority™
800-570-3355

AjMadison
Your Appliance Authority™
800-570-3355

AJMadison
Your Appliance Authority™
800-570-3355

Vario cooktops.

Vario cooktops 400 series.	80
Cut-out dimensions for appliance combinations in the 400 series.	116
Installation with appliance cover and adjustment strip.	121
Additional planning notes for VL 414.	122
Vario cooktops 200 series.	124
Cut-out dimensions for appliance combinations in the 200 series.	135
Accessories / Special accessories.	136
Technical specifications.	140

AjMadison
Your Appliance Authority™
800-570-3355

VI 491 110
Stainless steel frame
Width 90 cm

Installation accessories

VA 420 010
Connection strip for combination with other Vario appliances of the 400 series for surface installation

VA 420 011
Connection strip for combination with other Vario appliances of the 400 series for surface installation with appliance cover/adjustment strip

VA 420 000
Connection strip for combination with other Vario appliances of the 400 series for flush installation

VA 420 001
Connection strip for combination with other Vario appliances of the 400 series for flush installation with appliance cover/adjustment strip

VA 450 900
Stainless steel adjustment strip 90 cm
Required accessory for combination of several Vario appliances of the 400 series with at least one appliance cover to compensate the appliance depth.

Vario induction cooktop 400 series
VI 491

- Five cooking zones with booster for cookware with a diameter of 15 to 32 cm
- Solid stainless steel control knob
- Precision crafting of 3 mm stainless steel
- For surface installation with a visible edge or for flush installation
- Can be combined perfectly with other Vario appliances of the 400 series

Cooking zones
1 induction cooking zone ø 21 cm (2,200 W, with booster 3,300 W), automatically switches to ø 26 cm (2,600 W, with booster 3,400 W) and to ø 32 cm (3,300 W, with booster 4,600 W).
1 induction cooking zone ø 21 cm (2,200 W, with booster 3,300 W).
2 induction cooking zones ø 18 cm (1,800 W, with booster 2,500 W).
1 induction cooking zone ø 15 cm (1,400 W, with booster 1,800 W).

Handling
Control knobs with illuminated ring, cooking zone and output level markings.
Electronic control in 12 output levels.

Features
Cooking zone marking.
Booster function for each cooking zone.
Super booster function for ø 32 cm cooking zone.
Pot detection.
Timer.

Safety
Individual residual heat indicators.
Safety shut-off.

Planning notes
Depending on the type of installation (surface-mounted or flush-mounted, with or without an appliance cover), the specific location of the cut-out and the knob positions may vary.
If installing with the appliance cover VA 440 or adjustement strip VA 450 take into account the additional space required for the depth.
If combining several appliances with at least one appliance cover, the adjustment strip VA 450 is required to compensate for the depth of the appliance without the appliance cover.
If combining several Vario appliances of the 400 series, a connection strip VA 420 must be placed between the appliances. Depending on the type of installation, the corresponding connection strip must be provided.
In the cut-out, the installation system requires the side edge to be at least 10 mm for surface installation and at least 13 mm for flush installation.
Ensure a continuous cut surface of 90°.
The bearing capacity and stability, in the case of thin worktops in particular, must be supported using suitable substructures. Take into account the appliance weight and additional loads.
Additional instructions for flush installation:
Installation is possible in worktops made of stone, synthetics or solid wood. Heat resistance and watertight sealing of the cut edges must be observed.
Concerning other materials please consult the worktop manufacturer.
The groove must be continuous and even, so that uniform placing of the appliance on the gasket is ensured.
Do not use discontinuous lining.
The joint width may vary due to size tolerances of the combinations and of the worktop cut-out.

Please read additional planning notes on page 116–123.

If installing several appliances in individual cut-outs allow for a division bar of minimum 50 mm between the individual cut-outs.
Operates with magnetic (induction) iron pots and pans only. For an optimal heat distribution, the use of sandwich bottom cookware is recommended.
The wok pan WP 400 001 cannot be used with this appliance.
Immersion depth depending on installation situation 54/57 mm.
Built-in control panel to be integrated in the bottom cabinet at drawer level.
Panel thickness 16 – 26 mm.
The drawing "Installation of the control knob" must be observed if the panel is more than 26 mm thick (there must be a recess at the rear).
The combination with VL 414 is not recommended, since the air extraction from the centre zone cannot be guaranteed due to the distance.
Appliance can be snapped into the worktop from above.
Appliance weight: approx. 22 kg.

Please read additional planning notes on page 178.

Connection
Total connected load 10.8 kW.
Connecting cable 1.5 m without plug.

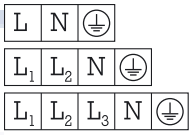

AJMadison
Your Appliance Authority™
800-570-3355

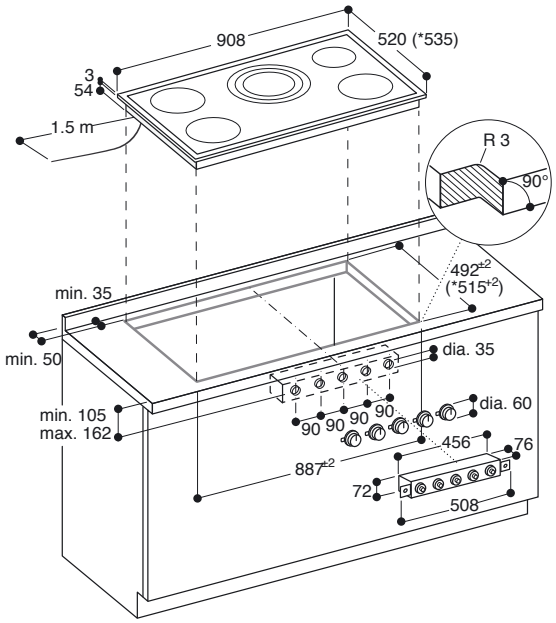

* with spacer batten.
See separate planning notes.

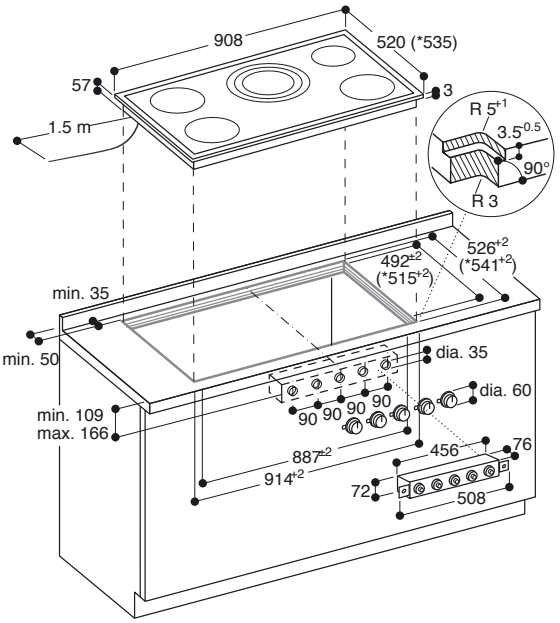

* with spacer batten.
See separate planning notes.

Installation of the control knob; installation standing proud of surrounding surfaces

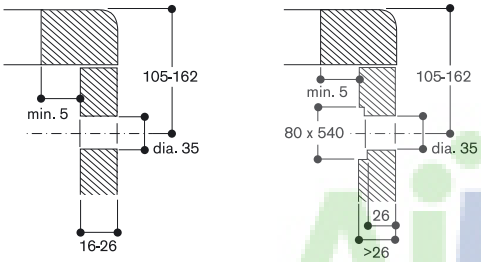

Installation of the control knob; installation flush with surrounding surfaces

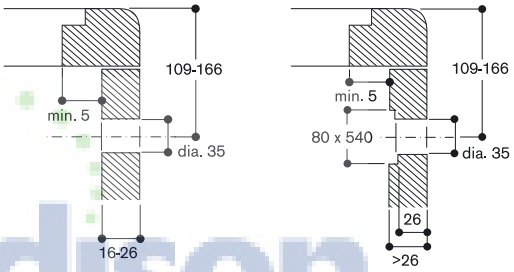

View from above

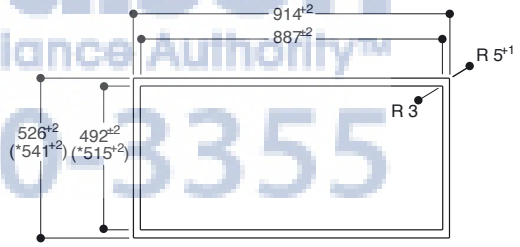

* with spacer batten

Longitudinal section

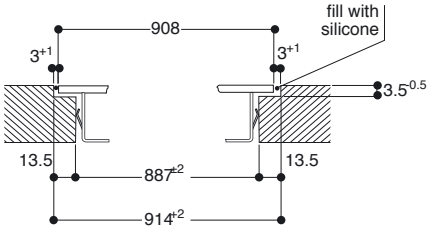

Cross-section

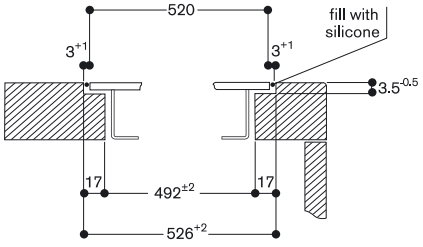

When installing with appliance cover or spacer batten, pay attention to the deeper cut-out and the front and rear groove width.

AjMadison
Your Appliance Authority™
800-570-3355

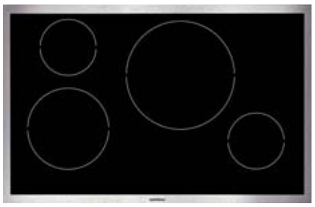

VI 481 110
Stainless steel frame
Width 80 cm

Installation accessories

VA 420 010
Connection strip for combination with other Vario appliances of the 400 series for surface installation

VA 420 011
Connection strip for combination with other Vario appliances of the 400 series for surface installation with appliance cover/adjustment strip

VA 420 000
Connection strip for combination with other Vario appliances of the 400 series for flush installation

VA 420 001
Connection strip for combination with other Vario appliances of the 400 series for flush installation with appliance cover/adjustment strip

VA 450 800
Stainless steel adjustment strip 80 cm
Required accessory for combination of several Vario appliances of the 400 series with at least one appliance cover to compensate the appliance depth.

Vario induction cooktop 400 series
VI 481

- Four cooking zones with booster for cookware with a diameter of 15 to 28 cm
- Solid stainless steel control knob
- Precision crafting of 3 mm stainless steel
- For surface installation with a visible edge or for flush installation
- Can be combined perfectly with other Vario appliances of the 400 series

Cooking zones
1 induction cooking zone ø 28 cm (2,400 W, with booster 3,600 W).
1 induction cooking zone ø 21 cm (2,200 W, with booster 3,300 W).
2 induction cooking zones ø 15 cm (1,400 W, with booster 1,800 W).

Handling
Control knobs with illuminated ring, cooking zone and output level markings.
Electronic control in 12 output levels.

Features
Cooking zone marking.
Booster function for each cooking zone.
Pot detection.
Timer.

Safety
Individual residual heat indicators.
Safety shut-off.

Planning notes
Depending on the type of installation (surface-mounted or flush-mounted, with or without an appliance cover), the specific location of the cut-out and the knob positions may vary.
If installing with the appliance cover VA 440 or adjustement strip VA 450 take into account the additional space required for the depth.
If combining several appliances with at least one appliance cover, the adjustment strip VA 450 is required to compensate for the depth of the appliance without the appliance cover.
If combining several Vario appliances of the 400 series, a connection strip VA 420 must be placed between the appliances. Depending on the type of installation, the corresponding connection strip must be provided.
In the cut-out, the installation system requires the side edge to be at least 10 mm for surface installation and at least 13 mm for flush installation.
Ensure a continuous cut surface of 90°.
The bearing capacity and stability, in the case of thin worktops in particular, must be supported using suitable substructures. Take into account the appliance weight and additional loads.
Additional instructions for flush installation:
Installation is possible in worktops made of stone, synthetics or solid wood. Heat resistance and watertight sealing of the cut edges must be observed. Concerning other materials please consult the worktop manufacturer.
The groove must be continuous and even, so that uniform placing of the appliance on the gasket is ensured. Do not use discontinuous lining.
The joint width may vary due to size tolerances of the combinations and of the worktop cut-out.

Please read additional planning notes on page 116–123.

If installing several appliances in individual cut-outs allow for a division bar of minimum 50 mm between the individual cut-outs.
Operates with magnetic (induction) iron pots and pans only. For an optimal heat distribution, the use of sandwich bottom cookware is recommended.
The wok pan WP 400 001 cannot be used with this appliance.
Immersion depth depending on installation situation 54/57 mm.
Built-in control panel to be integrated in the bottom cabinet at drawer level.
Panel thickness 16 – 26 mm.
The drawing "Installation of the control knob" must be observed if the panel is more than 26 mm thick (there must be a recess at the rear).
The combination with VL 414 is not recommended, since the air extraction from the centre zone cannot be guaranteed due to the distance.
Appliance can be snapped into the worktop from above.
Appliance weight: approx. 17 kg.

Please read additional planning notes on page 178.

Connection
Total connected load 7.2 kW.
Connecting cable 1.5 m without plug.

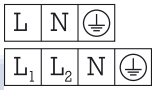

Authorized Appliance Authority™
800-570-3355

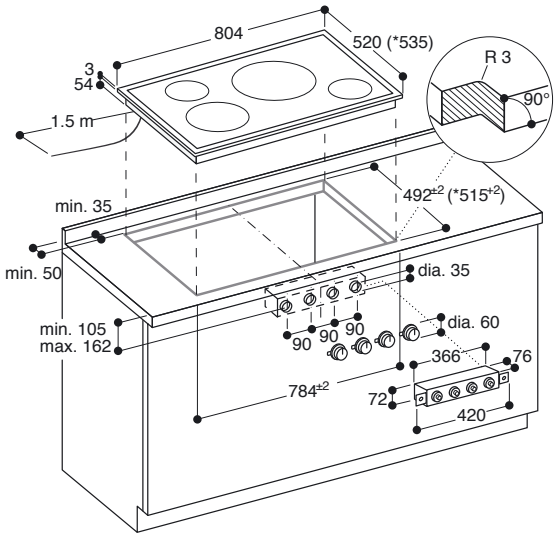

* with spacer batten.
See separate planning notes.

Installation of the control knob; installation standing proud of surrounding surfaces

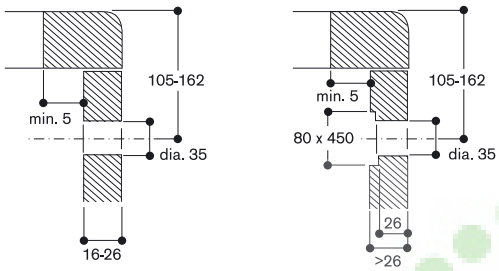

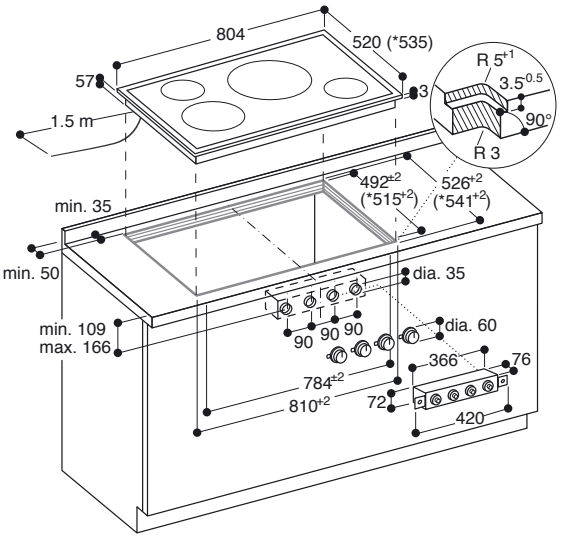

* with spacer batten.
See separate planning notes.

Installation of the control knob; installation flush with surrounding surfaces

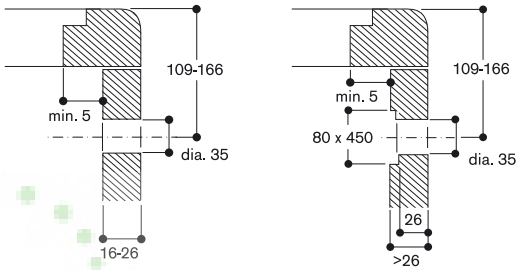

View from above

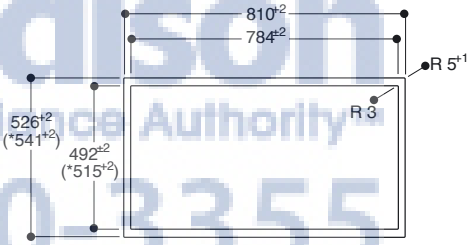

* with spacer batten

Longitudinal section

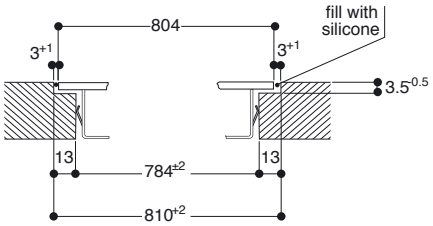

Cross-section

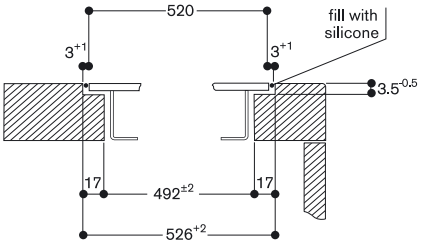

When installing with appliance cover or spacer batten, pay attention to the deeper cut-out and the front and rear groove width.

AjMadison
Your Appliance Authority
800-570-3355

CX 480 111
Stainless steel frame
Width 80 cm

Installation accessories

VA 420 010
Connection strip for combination with other Vario appliances of the 400 series for surface installation

VA 420 011
Connection strip for combination with other Vario appliances of the 400 series for surface installation with appliance cover/adjustment strip

VA 420 000
Connection strip for combination with other Vario appliances of the 400 series for flush installation

VA 420 001
Connection strip for combination with other Vario appliances of the 400 series for flush installation with appliance cover/adjustment strip

VA 450 800
Stainless steel adjustment strip 80 cm
Required accessory for combination of several Vario appliances of the 400 series with at least one appliance cover to compensate the appliance depth.

Special accessories

GN 232 110
Teppan Yaki made of multi ply material, GN 1/1
For full surface induction hob CX 480.

GN 232 230
Teppan Yaki made of multi ply material, GN 2/3
For full surface induction hob CX 480.

Full surface induction cooktop
CX 480

- One single big cooking surface
- Free positioning of cookware
- All sizes and formats of cookware can be used
- TFT touch display for an intuitive control of all functions
- Max. power output for big cookware of up to 4.4 kW
- Precision crafting of 3 mm stainless steel
- For surface installation with a visible edge or for flush installation
- Can be combined perfectly with other Vario appliances of the 400 series

Cooking zones
One unique cooking surface of 2,800 cm².
Up to 4 items of cookware can be placed simultaneously on the cooktop.

Handling
Easy to use colour graphic TFT touch display with use indications.
Electronic power control in 17 output levels.

Features
Booster function.
Individual pot detection.
Cooking timer for each cooking position.
Timer.
Information key with use indications.
Power management.

Safety
Main switch.
Residual heat indicator.
Child lock.
Display cleaning protection.

Planning notes
Depending on the type of installation (surface-mounted or flush-mounted), the specific definition of the cut-out must be observed.
If installing with the appliance cover VA 440 or adjustement strip VA 450 take into account the additional space required for the depth.
If combining several appliances with at least one appliance cover, the adjustment strip VA 450 is required to compensate for the depth of the appliance without the appliance cover.
If combining several Vario appliances of the 400 series, a connection strip VA 420 must be placed between the appliances. Depending on the type of installation, the corresponding connection strip must be provided.
In the cut-out, the installation system requires the side edge to be at least 10 mm for surface installation and at least 13 mm for flush installation.
Ensure a continuous cut surface of 90°.
The bearing capacity and stability, in the case of thin worktops in particular, must be supported using suitable substructures. Take into account the appliance weight and additional loads.
Additional instructions for flush installation:
Installation is possible in worktops made of stone, synthetics or solid wood. Heat resistance and watertight sealing of the cut edges must be observed. Concerning other materials please consult the worktop manufacturer.
The groove must be continuous and even, so that uniform placing of the appliance on the gasket is ensured. Do not use discontinuous lining.
The joint width may vary due to size tolerances of the combinations and of the worktop cut-out.

Please read additional planning notes on page 116–123.

If installing several appliances in individual cut-outs allow for a division bar of minimum 50 mm between the individual cut-outs.
Operates with magnetic (induction) iron pots and pans only. For an optimal heat distribution, the use of sandwich bottom cookware is recommended.
The wok pan WP 400 001 cannot be used with this appliance.
Immersion depth depending on installation situation 64/67 mm.
Intermediate shelf is required.
Appliance can be snapped into the worktop from above.
Appliance weight: approx. 27 kg.

Please read additional planning notes on page 178.

Connection
Total connected load 7.2 kW.
Connecting cable 1.5 m without plug.

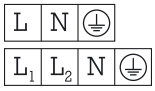

AJMadison
The Home Appliance Authority™
800-570-3355

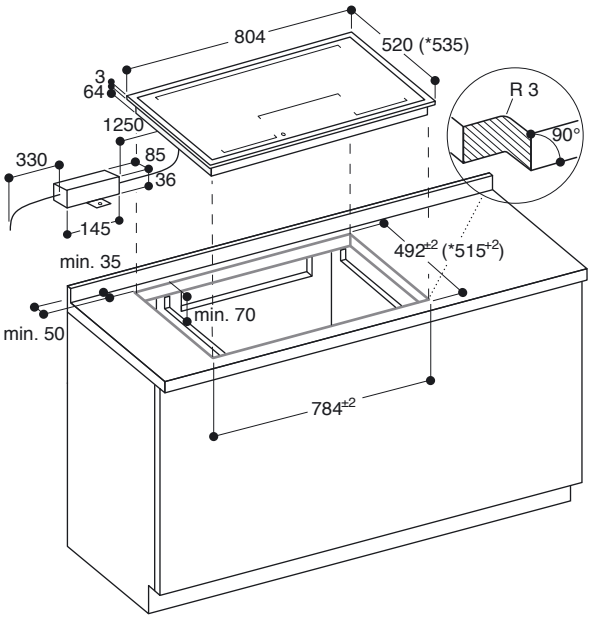

* with spacer batten.
See separate planning notes.

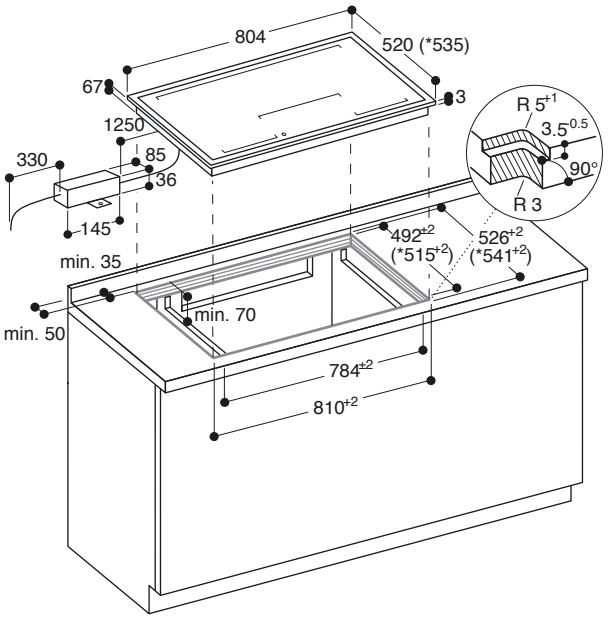

* with spacer batten.
See separate planning notes.

View from above

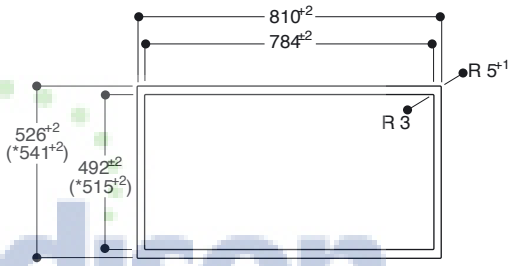

* with spacer batten

Longitudinal section

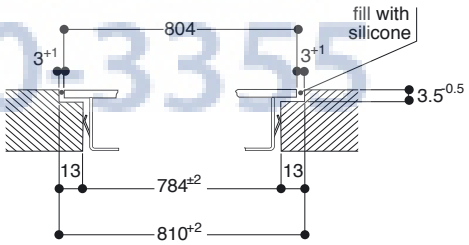

Cross-section

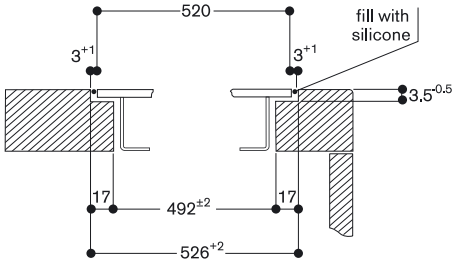

When installing with appliance cover or spacer batten, pay attention to the deeper cut-out and the front and rear groove width.

AjMadison
Your Appliance Authority™
800-570-3351

VI 461 110
Stainless steel frame
Width 60 cm

Installation accessories

VA 420 010
Connection strip for combination with other Vario appliances of the 400 series for surface installation

VA 420 011
Connection strip for combination with other Vario appliances of the 400 series for surface installation with appliance cover/adjustment strip

VA 420 000
Connection strip for combination with other Vario appliances of the 400 series for flush installation

VA 420 001
Connection strip for combination with other Vario appliances of the 400 series for flush installation with appliance cover/adjustment strip

VA 450 600
Stainless steel adjustment strip 60 cm
Required accessory for combination of several Vario appliances of the 400 series with at least one appliance cover to compensate the appliance depth.

Vario induction cooktop 400 series
VI 461

- Three cooking zones with booster for cookware with a diameter of 15 to 28 cm
- Solid stainless steel control knob
- Precision crafting of 3 mm stainless steel
- For surface installation with a visible edge or for flush installation
- Can be combined perfectly with other Vario appliances of the 400 series

Cooking zones
1 induction cooking zone ø 18 cm (1,800 W, with booster 2,500 W), automatically switches to ø 28 cm (2,800 W, with booster 4,400 W).
1 induction cooking zone ø 21 cm (2,200 W, with booster 3,300 W).
1 induction cooking zone ø 15 cm (1,400 W, with booster 1,800 W).

Handling
Control knobs with illuminated ring, cooking zone and output level markings.
Electronic control in 12 output levels.

Features
Cooking zone marking.
Booster function for each cooking zone.
Super booster function for ø 28 cm cooking zone.
Pot detection.
Timer.

Safety
Individual residual heat indicators.
Safety shut-off.

Planning notes
Depending on the type of installation (surface-mounted or flush-mounted, with or without an appliance cover), the specific location of the cut-out and the knob positions may vary.
If installing with the appliance cover VA 440 or adjustement strip VA 450 take into account the additional space required for the depth.
If combining several appliances with at least one appliance cover, the adjustment strip VA 450 is required to compensate for the depth of the appliance without the appliance cover.
If combining several Vario appliances of the 400 series, a connection strip VA 420 must be placed between the appliances. Depending on the type of installation, the corresponding connection strip must be provided.
In the cut-out, the installation system requires the side edge to be at least 10 mm for surface installation and at least 13 mm for flush installation.
Ensure a continuous cut surface of 90°.
The bearing capacity and stability, in the case of thin worktops in particular, must be supported using suitable substructures. Take into account the appliance weight and additional loads.
Additional instructions for flush installation:
Installation is possible in worktops made of stone, synthetics or solid wood. Heat resistance and watertight sealing of the cut edges must be observed. Concerning other materials please consult the worktop manufacturer.
The groove must be continuous and even, so that uniform placing of the appliance on the gasket is ensured. Do not use discontinuous lining.
The joint width may vary due to size tolerances of the combinations and of the worktop cut-out.

Please read additional planning notes on page 116–123.

If installing several appliances in individual cut-outs allow for a division bar of minimum 50 mm between the individual cut-outs.
Operates with magnetic (induction) iron pots and pans only. For an optimal heat distribution, the use of sandwich bottom cookware is recommended.
The wok pan WP 400 001 cannot be used with this appliance.
Immersion depth depending on installation situation 54/57 mm.
Built-in control panel to be integrated in the bottom cabinet at drawer level.
Panel thickness 16 – 26 mm.
The drawing "Installation of the control knob" must be observed if the panel is more than 26 mm thick (there must be a recess at the rear).
Appliance can be snapped into the worktop from above.
Appliance weight: approx. 14 kg.

Please read additional planning notes on page 178.

Connection
Total connected load 7.2 kW.
Connecting cable 1.5 m without plug.

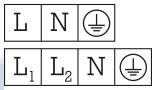

AJMadison
Your Appliance Authority™
800-570-3355

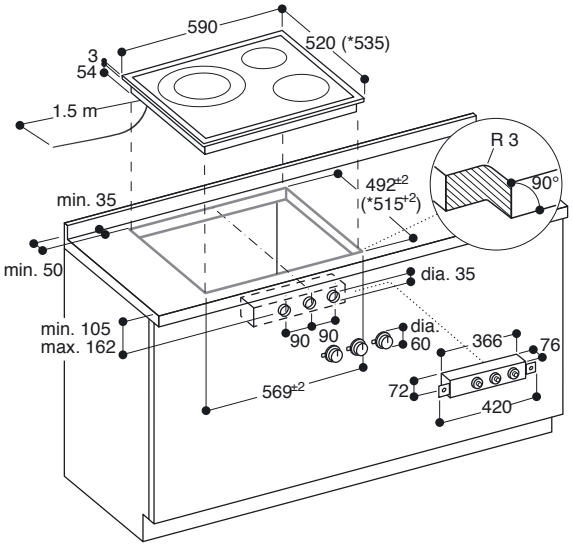

* with spacer batten.
See separate planning notes.

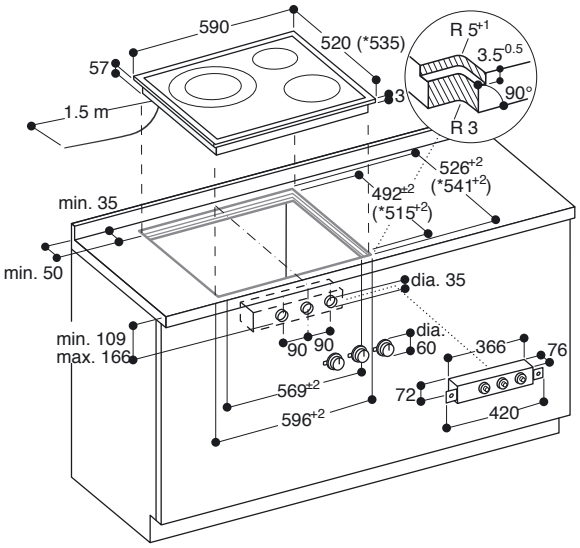

* with spacer batten.
See separate planning notes.

Installation of the control knob; installation standing proud of surrounding surfaces

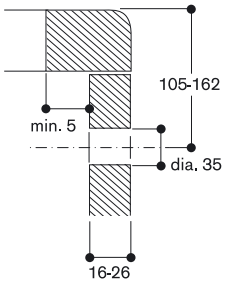

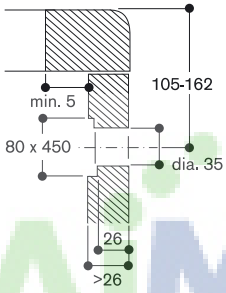

Installation of the control knob; installation flush with surrounding surfaces

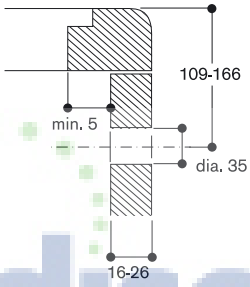

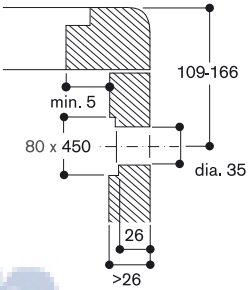

View from above

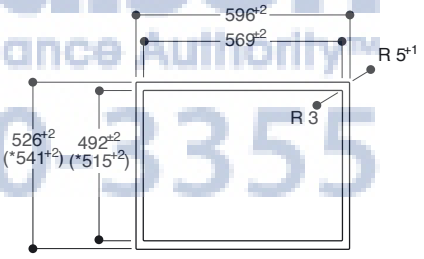

* with spacer batten

Longitudinal section

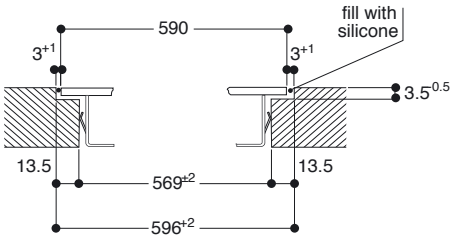

Cross-section

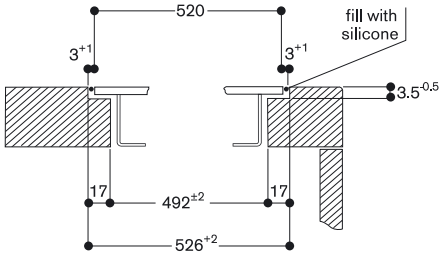

When installing with appliance cover or spacer batten, pay attention to the deeper cut-out and the front and rear groove width.

AjMadison
Your Appliance Authority
800-570-3355

VI 414 110
Stainless steel frame
Width 38 cm

Installation accessories

VA 420 010
Connection strip for combination with other Vario appliances of the 400 series for surface installation

VA 420 011
Connection strip for combination with other Vario appliances of the 400 series for surface installation with appliance cover/adjustment strip

VA 420 000
Connection strip for combination with other Vario appliances of the 400 series for flush installation

VA 420 001
Connection strip for combination with other Vario appliances of the 400 series for flush installation with appliance cover/adjustment strip

VA 440 010
Stainless steel appliance cover with mounting strip

VA 450 400
Stainless steel adjustment strip 38 cm
Required accessory for combination of several Vario appliances of the 400 series with at least one appliance cover to compensate the appliance depth.

Special accessories

WP 400 001
Wok pan made of multiple-layer material
With round bottom and handle, ø 36 cm, 6 litres, height 10 cm.

WZ 400 001
Wok attachment for wok pan
Only for Vario induction wok.

Vario induction wok 400 series
VI 414

- 28 cm cooking zone with booster function
- Ideal for the original wok pan with round bottom, with wok ring
- Solid stainless steel control knob
- Precision crafting of 3 mm stainless steel
- For surface installation with a visible edge or for flush installation
- Can be combined perfectly with other Vario appliances of the 400 series

Cooking zones
1 induction wok zone ø 18 cm (1,800 W, with booster 2,500 W), which automatically expands to ø 28 cm (2,800 W, with booster 3,600 W).

Handling
Control knobs with illuminated ring, cooking zone and output level markings.
Electronic control in 12 output levels.

Features
Cooking zone marking.
Booster function for each cooking zone.
Pot detection with automatic activation of the outer cooking zone.
Timer.

Safety
Residual heat indication.
Safety shut-off.

Planning notes
Depending on the type of installation (surface-mounted or flush-mounted, with or without an appliance cover), the specific location of the cut-out and the knob positions may vary.
If installing with the appliance cover VA 440 or adjustement strip VA 450 take into account the additional space required for the depth.
If combining several appliances with at least one appliance cover, the adjustment strip VA 450 is required to compensate for the depth of the appliance without the appliance cover.
If combining several Vario appliances of the 400 series, a connection strip VA 420 must be placed between the appliances. Depending on the type of installation, the corresponding connection strip must be provided.
In the cut-out, the installation system requires the side edge to be at least 10 mm for surface installation and at least 13 mm for flush installation.
Ensure a continuous cut surface of 90°.
The bearing capacity and stability, in the case of thin worktops in particular, must be supported using suitable substructures. Take into account the appliance weight and additional loads.
Additional instructions for flush installation:
Installation is possible in worktops made of stone, synthetics or solid wood. Heat resistance and watertight sealing of the cut edges must be observed. Concerning other materials please consult the worktop manufacturer.
The groove must be continuous and even, so that uniform placing of the appliance on the gasket is ensured. Do not use discontinuous lining.
The joint width may vary due to size tolerances of the combinations and of the worktop cut-out.

Please read additional planning notes on page 116–123.

If installing several appliances in individual cut-outs allow for a division bar of minimum 50 mm between the individual cut-outs.
Operates with magnetic (induction) iron pots and pans only. For an optimal heat distribution, the use of sandwich bottom cookware is recommended.
Immersion depth depending on installation situation 54/57 mm.
Built-in control panel to be integrated in the bottom cabinet at drawer level.
Panel thickness 16 – 26 mm.
The drawing "Installation of the control knob" must be observed if the panel is more than 26 mm thick (there must be a recess at the rear).
Appliance can be snapped into the worktop from above.
Appliance weight: approx. 9 kg.

Connection
Total connected load 3.6 kW.
Connecting cable 1.5 m without plug.

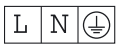

AJMadison
Your Appliance Authority™
800-570-3355

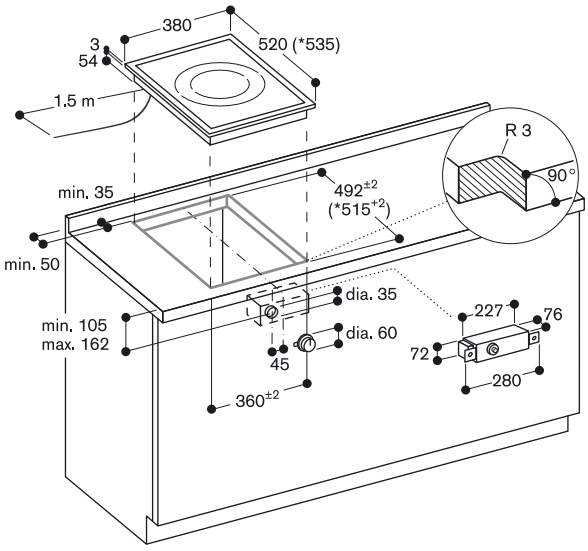

* with appliance cover or spacer batten
See separate planning notes.

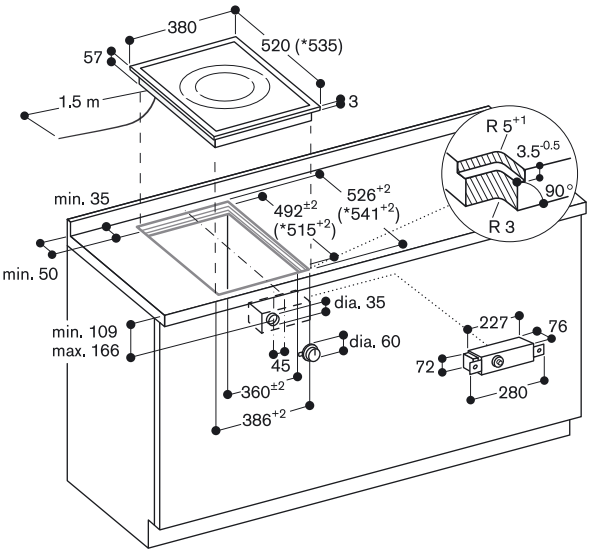

* with appliance cover or spacer batten
See separate planning notes.

Installation of the control knob; installation standing proud of surrounding surfaces

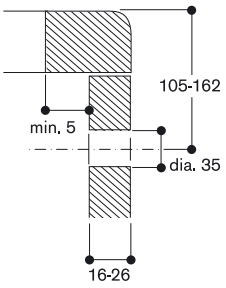

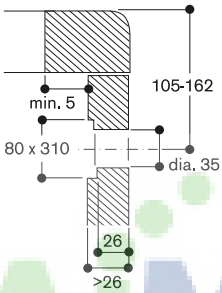

Installation of the control knob; installation flush with surrounding surfaces

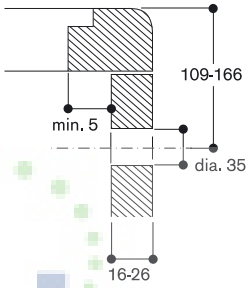

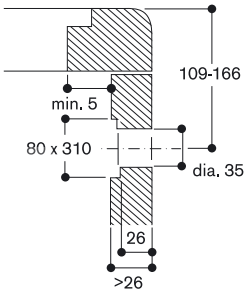

View from above

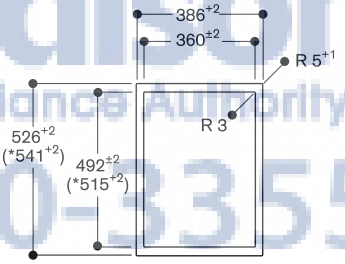

* with appliance cover or spacer batten
(observe the front and rear asymmetrical support, see separate notes "Installation with appliance cover/ spacer batten").

Longitudinal section

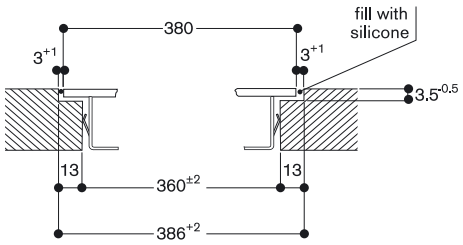

Cross-section

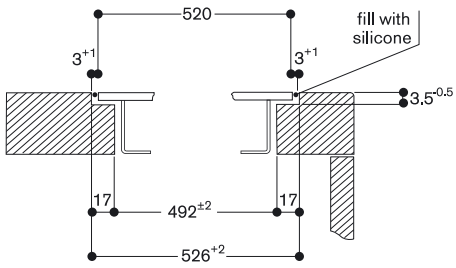

When installing with appliance cover or spacer batten, pay attention to the deeper cut-out and the front and rear groove width.

AjMadison
Your Appliance Authority™
800-570-3355

VI 424 110
Stainless steel frame
Width 38 cm

Installation accessories

VA 420 010
Connection strip for combination with other Vario appliances of the 400 series for surface installation

VA 420 011
Connection strip for combination with other Vario appliances of the 400 series for surface installation with appliance cover/adjustment strip

VA 420 000
Connection strip for combination with other Vario appliances of the 400 series for flush installation

VA 420 001
Connection strip for combination with other Vario appliances of the 400 series for flush installation with appliance cover/adjustment strip

VA 440 010
Stainless steel appliance cover with mounting strip

VA 450 400
Stainless steel adjustment strip 38 cm
Required accessory for combination of several Vario appliances of the 400 series with at least one appliance cover to compensate the appliance depth.

Vario induction cooktop 400 series
VI 424

- Two cooking zones with booster function
- Total output 3,600 W
- Solid stainless steel control knob
- Precision crafting of 3 mm stainless steel
- For surface installation with a visible edge or for flush installation
- Can be combined perfectly with other Vario appliances of the 400 series

Cooking zones
1 induction cooking zone ø 21 cm (2,200 W, with booster 3,300 W).
1 induction cooking zone ø 15 cm (1,400 W, with booster 1,800 W).

Handling
Control knobs with illuminated ring, cooking zone and output level markings.
Electronic control in 12 output levels.

Features
Cooking zone marking.
Booster function for both cooking zones (only separate operation with booster function).
Pot detection.
Timer.

Safety
Individual residual heat indicators.
Safety shut-off.

Planning notes
Depending on the type of installation (surface-mounted or flush-mounted, with or without an appliance cover), the specific location of the cut-out and the knob positions may vary.
If installing with the appliance cover VA 440 or adjustement strip VA 450 take into account the additional space required for the depth.
If combining several appliances with at least one appliance cover, the adjustment strip VA 450 is required to compensate for the depth of the appliance without the appliance cover.
If combining several Vario appliances of the 400 series, a connection strip VA 420 must be placed between the appliances. Depending on the type of installation, the corresponding connection strip must be provided.
In the cut-out, the installation system requires the side edge to be at least 10 mm for surface installation and at least 13 mm for flush installation.
Ensure a continuous cut surface of 90°.
The bearing capacity and stability, in the case of thin worktops in particular, must be supported using suitable substructures. Take into account the appliance weight and additional loads.
Additional instructions for flush installation:
Installation is possible in worktops made of stone, synthetics or solid wood. Heat resistance and watertight sealing of the cut edges must be observed. Concerning other materials please consult the worktop manufacturer.
The groove must be continuous and even, so that uniform placing of the appliance on the gasket is ensured. Do not use discontinuous lining.
The joint width may vary due to size tolerances of the combinations and of the worktop cut-out.

Please read additional planning notes on page 116–123.

If installing several appliances in individual cut-outs allow for a division bar of minimum 50 mm between the individual cut-outs.
Operates with magnetic (induction) iron pots and pans only. For an optimal heat distribution, the use of sandwich bottom cookware is recommended.
Immersion depth depending on installation situation 54/57 mm.
Built-in control panel to be integrated in the bottom cabinet at drawer level.
Panel thickness 16 – 26 mm.
The drawing "Installation of the control knob" must be observed if the panel is more than 26 mm thick (there must be a recess at the rear).
Appliance can be snapped into the worktop from above.
Appliance weight: approx. 9 kg.

Connection
Total connected load 3.6 kW.
Connecting cable 1.5 m without plug.

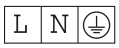

AJ Madison
Your Appliance Authority™
800-570-3355

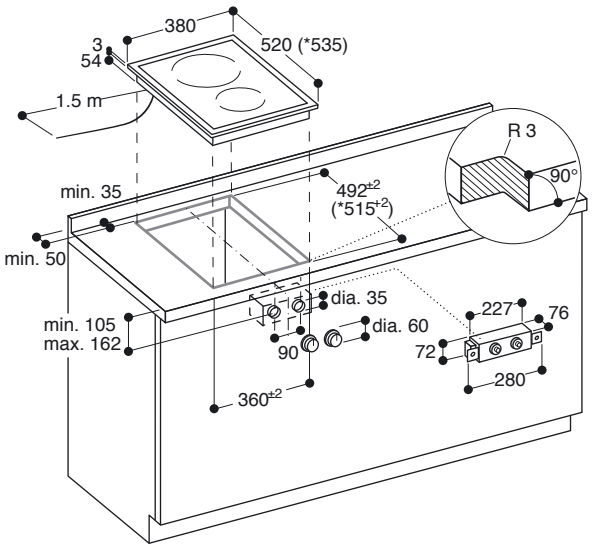

* with appliance cover or spacer batten.
See separate planning notes.

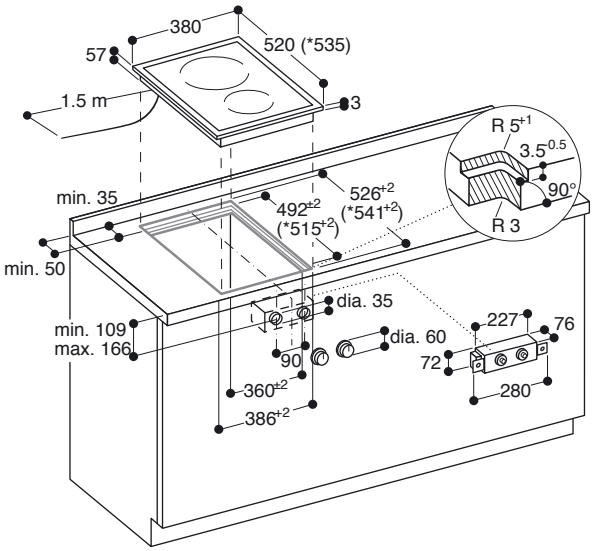

* with appliance cover or spacer batten.
See separate planning notes.

Installation of the control knob; installation standing proud of surrounding surfaces

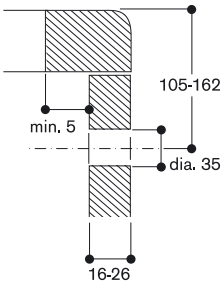

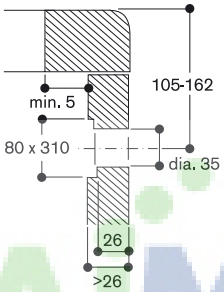

Installation of the control knob; installation flush with surrounding surfaces

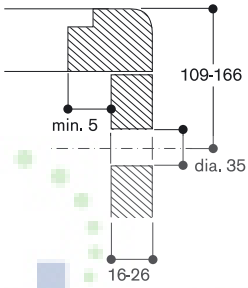

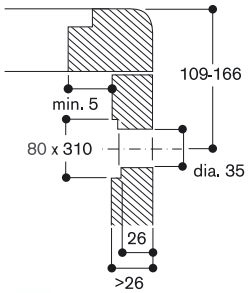

View from above

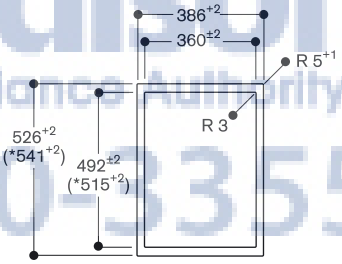

* with appliance cover or spacer batten
(observe the front and rear asymmetrical support,
see separate notes "Installation with appliance cover/
spacer batten").

Longitudinal section

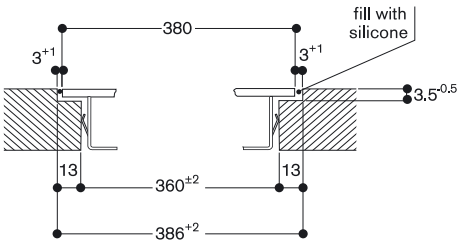

Cross-section

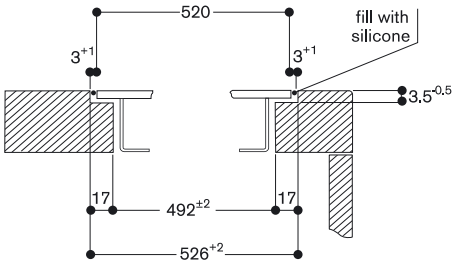

When installing with appliance cover or spacer batten, pay attention to the deeper cut-out and the front and rear groove width.

AjMadison
Your Appliance Authority™
800-570-3355

VG 491 110F
Stainless steel
Width 90 cm
Liquid gas 28 – 37 mbar

VG 491 210
Stainless steel
Width 90 cm
Natural gas 20 mbar

Installation accessories

VA 420 010
Connection strip for combination with other Vario appliances of the 400 series for surface installation

VA 420 011
Connection strip for combination with other Vario appliances of the 400 series for surface installation with appliance cover/adjustment strip

VA 420 000
Connection strip for combination with other Vario appliances of the 400 series for flush installation

VA 420 001
Connection strip for combination with other Vario appliances of the 400 series for flush installation with appliance cover/adjustment strip

VA 450 900
Stainless steel adjustment strip 90 cm
Required accessory for combination of several Vario appliances of the 400 series with at least one appliance cover to compensate the appliance depth.

SV 405 001
Spindle extensions up to 80 mm

SV 405 002
Spindle extensions up to 160 mm

SV 405 003
Spindle extensions up to 320 mm

SV 405 011
Spindle extensions up to 65 mm

SV 405 012
Spindle extensions up to 140 mm

Special accessories

WP 400 001
Wok pan made of multiple-layer material
With round bottom and handle, ø 36 cm, 6 litres, height 10 cm.

Vario gas cooktop 400 series
VG 491

- Five multi-ring burners, up to 18 kW
- Automatic fast ignition, electronic flame monitoring
- Solid smooth-surface cast pan supports
- Solid stainless steel control knob
- Precision crafting of 3 mm stainless steel
- For surface installation with a visible edge or for flush installation
- Can be combined perfectly with other Vario appliances of the 400 series

Cooking zones

VG 491 110F
1 three-ring wok burner
(300 W – 5,000 W), suitable for pots up to max. ø 32 cm.
2 two-ring high output burners
(165 W – 4,000 W), suitable for pots up to max. ø 28 cm.
2 two-ring standard burners
(165 W – 2,000 W), suitable for pots up to max. ø 28 cm.

VG 491 210
1 three-ring wok burner
(300 W – 6,000 W), suitable for pots up to max. ø 32 cm.
2 two-ring high output burners
(165 W – 4,000 W), suitable for pots up to max. ø 28 cm.
2 two-ring standard burners
(165 W – 2,000 W), suitable for pots up to max. ø 28 cm.

Handling

Control knobs with cooking zone and output level markings.
One-handed operation.
Gas valve with fine control.

Features

Three-part cast pan support with flat, continuous pot surface.
Brass burner rings.

Safety

Electronic flame monitoring with automatic re-ignition.
Automatic fast ignition.
Safety shut-off.

Planning notes

Depending on the type of installation (surface-mounted or flush-mounted, with or without an appliance cover), the specific location of the cut-out and the knob positions may vary.
If installing with the appliance cover VA 440 or adjustement strip VA 450 take into account the additional space required for the depth.
If combining several appliances with at least one appliance cover, the adjustment strip VA 450 is required to compensate for the depth of the appliance without the appliance cover.
If combining several Vario appliances of the 400 series, a connection strip VA 420 must be placed between the appliances. Depending on the type of installation, the corresponding connection strip must be provided.
In the cut-out, the installation system requires the side edge to be at least 10 mm for surface installation and at least 13 mm for flush installation.
Ensure a continuous cut surface of 90°.

The bearing capacity and stability, in the case of thin worktops in particular, must be supported using suitable substructures. Take into account the appliance weight and additional loads.
Additional instructions for flush installation:
Installation is possible in worktops made of stone, synthetics or solid wood. Heat resistance and watertight sealing of the cut edges must be observed. Concerning other materials please consult the worktop manufacturer.
The groove must be continuous and even, so that uniform placing of the appliance on the gasket is ensured.
Do not use discontinuous lining.
The joint width may vary due to size tolerances of the combinations and of the worktop cut-out.

Please read additional planning notes on page 116–123.

If installing several appliances in individual cut-outs allow for a division bar of minimum 50 mm between the individual cut-outs.
Control knobs to be integrated in the bottom cabinet at drawer level.
Panel thickness 16 – 26 mm.
The drawing "Installation of the control knob" must be observed if the panel is more than 26 mm thick (there must be a recess at the rear).
Special nozzles can be ordered as spare parts.
Plan for an electrical connection (the appliance is not operable without power supply).
Air intake from above.
No intermediate shelf required.
Rear panel and wall trims must be heat-resistant and consist of a non-flammable material.
A minimum lateral clearance of at least 300 mm from adjacent heat-sensitive furniture or contact surfaces must be observed or thermal insulation fitted.
Installation in a 90 cm wide lower cabinet is required.
The combination with VL 414 is not recommended, since the air extraction from the centre burner cannot be guaranteed due to the distance.
With a total connected load of more than 12 kW local regulations concerning room ventilation, room size and combination of extraction or recirculation hoods must be observed.
Minimum clearance between gas cooktop(s) with more than 12 kW and ventilation hood 70 cm.
Appliance can be snapped into the worktop from above.
Appliance weight: approx. 32 kg.

Connection

Total connected load gas 17.0/18.0 kW.
Total connected load electric 15.0/15.0 W.
Connecting cable 1.4 m with plug.

AJMadison
Your Appliance Authority™
800-570-3355

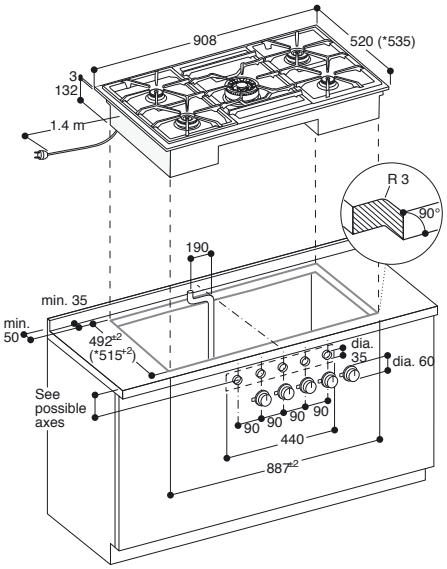

* with spacer batten.
See separate planning notes.

Possible axis extension, installation standing proud of surrounding surfaces

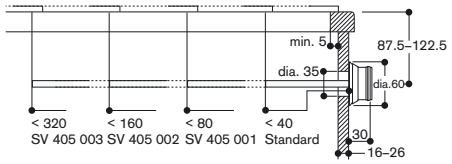

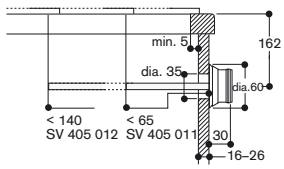

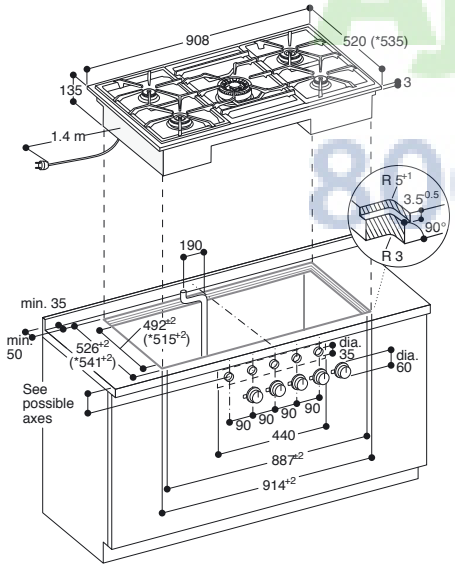

* with spacer batten.
See separate planning notes.

Possible axis extension, installation flush with surrounding surfaces

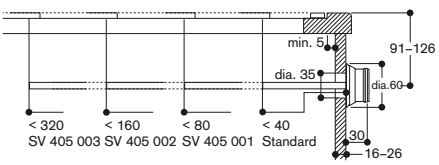

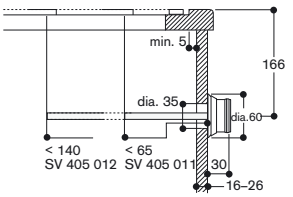

View from above

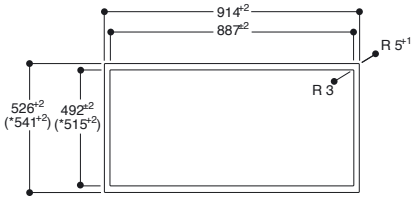

* with spacer batten

Longitudinal section

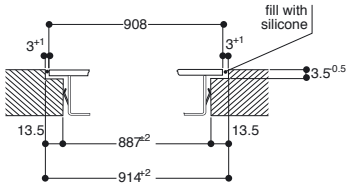

Cross-section

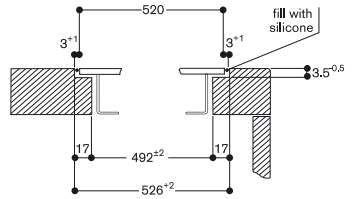

When installing with appliance cover or spacer batten, pay attention to the deeper cut-out and the front and rear groove width.

Gas connection

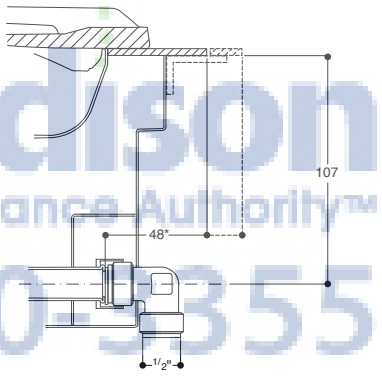

* 63 mm with spacer batten.

Installation of the control knob

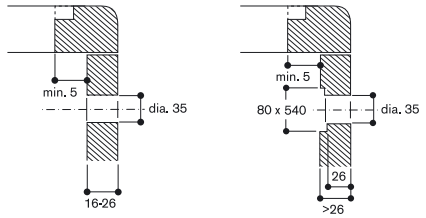

AjMadison
Your Appliance Authority™
800-570-5355

VG 415 110F
Stainless steel
Width 38 cm
Liquid gas 28 – 37 mbar
Wok burner with 5 KW

VG 415 210
Stainless steel
Width 38 cm
Natural gas 20 mbar
Wok burner with 6 KW

Installation accessories

VA 420 010
Connection strip for combination with other Vario appliances of the 400 series for surface installation

VA 420 011
Connection strip for combination with other Vario appliances of the 400 series for surface installation with appliance cover/adjustment strip

VA 420 000
Connection strip for combination with other Vario appliances of the 400 series for flush installation

VA 420 001
Connection strip for combination with other Vario appliances of the 400 series for flush installation with appliance cover/adjustment strip

VA 440 010
Stainless steel appliance cover with mounting strip

VA 450 400
Stainless steel adjustment strip 38 cm
Required accessory for combination of several Vario appliances of the 400 series with at least one appliance cover to compensate the appliance depth.

Special accessories

WP 400 001
Wok pan made of multiple-layer material
With round bottom and handle, ø 36 cm, 6 litres, height 10 cm.

Vario gas wok 400 series

VG 415

- Three-ring burner up to 6 kW
- Full electronic gas valves for precise and reproducible power adjustments
- Automatic fast ignition, electronic flame monitoring with automatic re-ignition
- Simmer function for cooking on a very low output level
- Solid stainless steel control knob
- Precision crafting of 3 mm stainless steel
- For surface installation with a visible edge or for flush installation
- Can be combined perfectly with other Vario appliances of the 400 series

Cooking zones

VG 415 110F
1 three-ring wok burner
(300 W – 5,000 W), suitable for pots up to max. ø 32 cm.

VG 415 210
1 three-ring wok burner
(300 W – 6,000 W), suitable for pots up to max. ø 32 cm.

Handling

Control knobs with illuminated ring, cooking zone and output level markings.
One-handed operation.
Full electronic control in 12 output levels for exact power level adjustment plus simmer function.

Features

Simmer function (150 W).
Cast pan support with flat, continuous pot surface.
Brass burner rings.

Safety

Electronic flame monitoring with automatic re-ignition.
Automatic fast ignition.
Residual heat indication.
Safety shut-off.

Planning notes

Depending on the type of installation (surface-mounted or flush-mounted, with or without an appliance cover), the specific location of the cut-out and the knob positions may vary.
If installing with the appliance cover VA 440 or adjustement strip VA 450 take into account the additional space required for the depth.
If combining several appliances with at least one appliance cover, the adjustment strip VA 450 is required to compensate for the depth of the appliance without the appliance cover.
If combining several Vario appliances of the 400 series, a connection strip VA 420 must be placed between the appliances. Depending on the type of installation, the corresponding connection strip must be provided.
In the cut-out, the installation system requires the side edge to be at least 10 mm for surface installation and at least 13 mm for flush installation.
Ensure a continuous cut surface of 90°.
The bearing capacity and stability, in the case of thin worktops in particular, must be supported using suitable substructures.
Take into account the appliance weight and additional loads.
Additional instructions for flush installation:
Installation is possible in worktops made of stone, synthetics or solid wood. Heat resistance and watertight sealing of the cut edges must be observed. Concerning other materials please consult the worktop manufacturer.
The groove must be continuous and even, so that uniform placing of the appliance on the gasket is ensured.
Do not use discontinuous lining.
The joint width may vary due to size tolerances of the combinations and of the worktop cut-out.

Please read additional planning notes on page 116–123.

If installing several appliances in individual cut-outs allow for a division bar of minimum 50 mm between the individual cut-outs.
Built-in control panel to be integrated in the bottom cabinet at drawer level.
Panel thickness 16 – 26 mm.
The drawing "Installation of the control knob" must be observed if the panel is more than 26 mm thick (there must be a recess at the rear).
Special nozzles can be ordered as spare parts.
Plan for an electrical connection (the appliance is not operable without power supply).
Air intake from above.
No intermediate shelf required.
Rear panel and wall trims must be heat-resistant and consist of a non-flammable material.
A minimum lateral clearance of at least 150 mm from adjacent heat-sensitive furniture or contact surfaces must be observed or thermal insulation fitted.
If operated next to the downdraft ventilation VL 414, the air baffle AA 414 is recommended to ensure maximum performance of the cooktop.
With a total connected load of more than 12 kW local regulations concerning room ventilation, room size and combination of extraction or recirculation hoods must be observed.
Minimum clearance between gas cooktop(s) with more than 12 kW and ventilation hood 70 cm.
Appliance can be snapped into the worktop from above.
Appliance weight: approx. 16 kg.

Connection

Total connected load gas 5.0/6.0 kW.
Total connected load electric 15.0/15.0 W.
Connecting cable 1.4 m with plug.

AjMadison
Your Appliance Authority™
800-570-3355

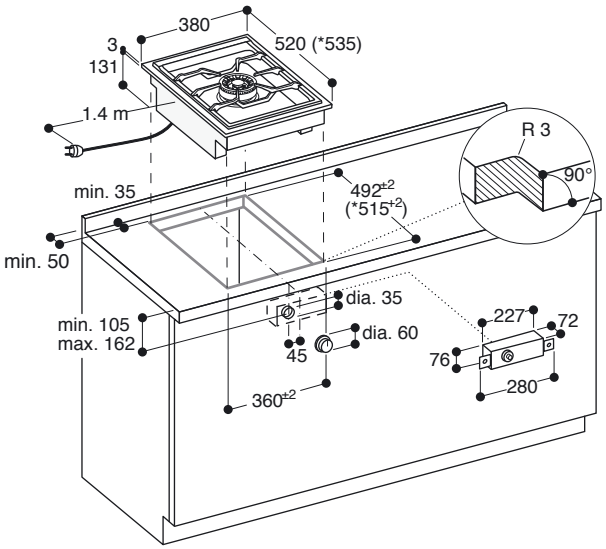

* with appliance cover or spacer batten.
See separate planning notes.

Installation of the control knob; installation standing proud of surrounding surfaces

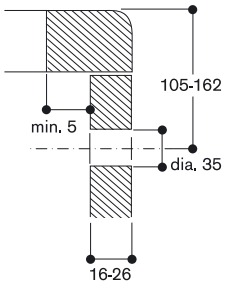

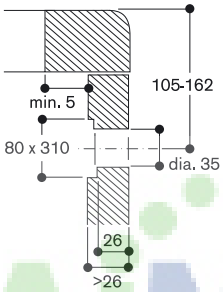

Gas connection

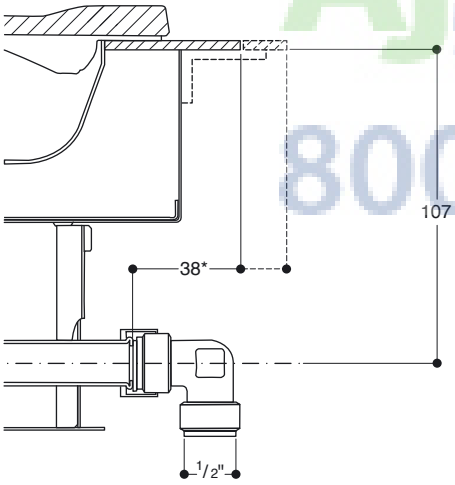

* 53 mm with appliance cover or spacer batten.

The gas connection is on the left-hand side, 123 mm from the centre of the appliance.

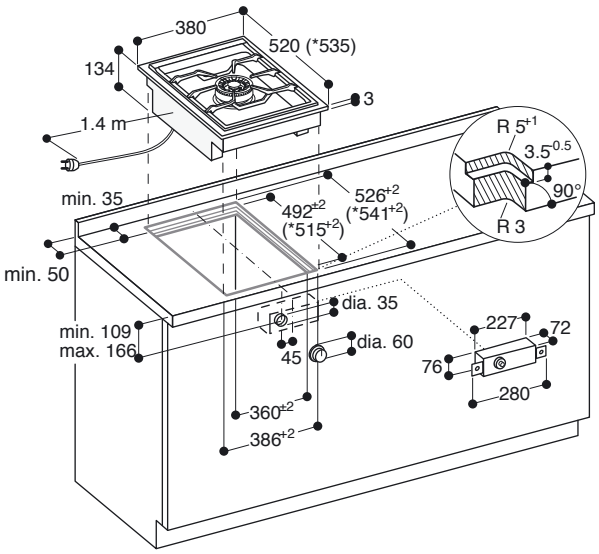

* with appliance cover or spacer batten.
See separate planning notes.

Installation of the control knob; installation flush with surrounding surfaces

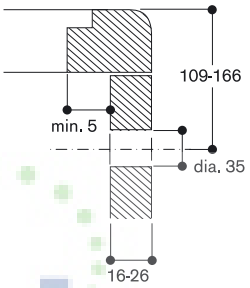

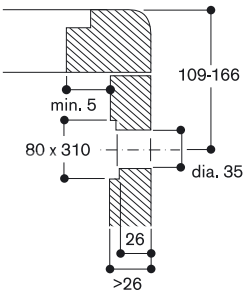

View from above

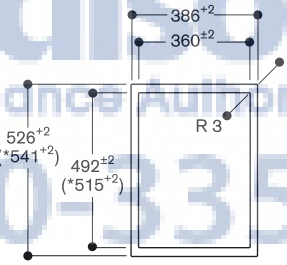

* with appliance cover or spacer batten
(observe the front and rear asymmetrical support, see separate notes "Installation with appliance cover/ spacer batten").

Longitudinal section

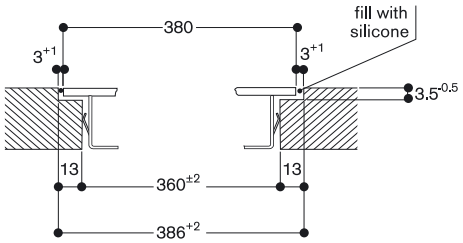

Cross-section

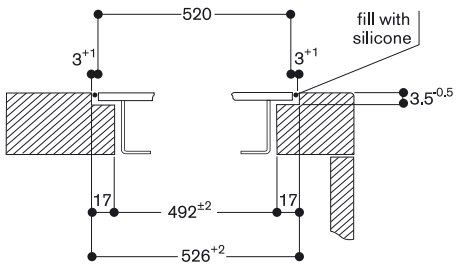

When installing with appliance cover or spacer batten, pay attention to the deeper cut-out and the front and rear groove width.

AJMadison
Your Appliance Authority™
800-570-3355

VG 425 110F
Stainless steel
Width 38 cm
Liquid gas 28 – 37 mbar

VG 425 210
Stainless steel
Width 38 cm
Natural gas 20 mbar

Installation accessories

VA 420 010
Connection strip for combination with other Vario appliances of the 400 series for surface installation

VA 420 011
Connection strip for combination with other Vario appliances of the 400 series for surface installation with appliance cover/adjustment strip

VA 420 000
Connection strip for combination with other Vario appliances of the 400 series for flush installation

VA 420 001
Connection strip for combination with other Vario appliances of the 400 series for flush installation with appliance cover/adjustment strip

VA 440 010
Stainless steel appliance cover with mounting strip

VA 450 400
Stainless steel adjustment strip 38 cm
Required accessory for combination of several Vario appliances of the 400 series with at least one appliance cover to compensate the appliance depth.

Vario gas cooktop 400 series
VG 425

- 2 two-ring burners, up to 4 kW
- Full electronic gas valves for precise and reproducible power adjustments
- Automatic fast ignition, electronic flame monitoring with automatic re-ignition
- Simmer function for cooking on a very low output level
- Solid stainless steel control knob
- Precision crafting of 3 mm stainless steel
- For surface installation with a visible edge or for flush installation
- Can be combined perfectly with other Vario appliances of the 400 series

Cooking zones
VG 425 110F
1 two-ring high output burner (165 W – 4,000 W), suitable for pots up to max. ø 28 cm.
1 two-ring standard output burner (165 W – 2,000 W), suitable for pots up to max. ø 28 cm.

VG 425 210
1 two-ring high output burner (165 W – 4,000 W), suitable for pots up to max. ø 28 cm.
1 two-ring standard output burner (165 W – 2,000 W), suitable for pots up to max. ø 28 cm.

Handling
Control knobs with illuminated ring, cooking zone and output level markings.
One-handed operation.
Full electronic control in 12 output levels for exact power level adjustment plus simmer function.

Features
Simmer function (80 W).
Cast pan support with flat, continuous pot surface.
Brass burner rings.

Safety
Electronic flame monitoring with automatic re-ignition.
Automatic fast ignition.
Residual heat indication.
Safety shut-off.

Planning notes
Depending on the type of installation (surface-mounted or flush-mounted, with or without an appliance cover), the specific location of the cut-out and the knob positions may vary.
If installing with the appliance cover VA 440 or adjustement strip VA 450 take into account the additional space required for the depth.
If combining several appliances with at least one appliance cover, the adjustment strip VA 450 is required to compensate for the depth of the appliance without the appliance cover.
If combining several Vario appliances of the 400 series, a connection strip VA 420 must be placed between the appliances. Depending on the type of installation, the corresponding connection strip must be provided.
In the cut-out, the installation system requires the side edge to be at least 10 mm for surface installation and at least 13 mm for flush installation.
Ensure a continuous cut surface of 90°.
The bearing capacity and stability, in the case of thin worktops in particular, must be supported using suitable substructures. Take into account the appliance weight and additional loads.
Additional instructions for flush installation:
Installation is possible in worktops made of stone, synthetics or solid wood. Heat resistance and watertight sealing of the cut edges must be observed. Concerning other materials please consult the worktop manufacturer.
The groove must be continuous and even, so that uniform placing of the appliance on the gasket is ensured. Do not use discontinuous lining.
The joint width may vary due to size tolerances of the combinations and of the worktop cut-out.

Please read additional planning notes on page 116–123.

If installing several appliances in individual cut-outs allow for a division bar of minimum 50 mm between the individual cut-outs.
Built-in control panel to be integrated in the bottom cabinet at drawer level.
Panel thickness 16 – 26 mm.
The drawing "Installation of the control knob" must be observed if the panel is more than 26 mm thick (there must be a recess at the rear).
Special nozzles can be ordered as spare parts.
Plan for an electrical connection (the appliance is not operable without power supply).
Air intake from above.
No intermediate shelf required.
Rear panel and wall trims must be heat-resistant and consist of a non-flammable material.
A minimum lateral clearance of at least 150 mm from adjacent heat-sensitive furniture or contact surfaces must be observed or thermal insulation fitted.
If operated next to the downdraft ventilation VL 414, the air baffle AA 414 is recommended to ensure maximum performance of the cooktop.
With a total connected load of more than 12 kW local regulations concerning room ventilation, room size and combination of extraction or recirculation hoods must be observed.
Minimum clearance between gas cooktop(s) with more than 12 kW and ventilation hood 70 cm.
Appliance can be snapped into the worktop from above.
Appliance weight: approx. 17 kg.

Connection
Total connected load gas 6.0/6.0 kW.
Total connected load electric 15.0/15.0 W.
Connecting cable 1.4 m with plug.

AJ Madison
Your Appliance Authority™
800-570-3355

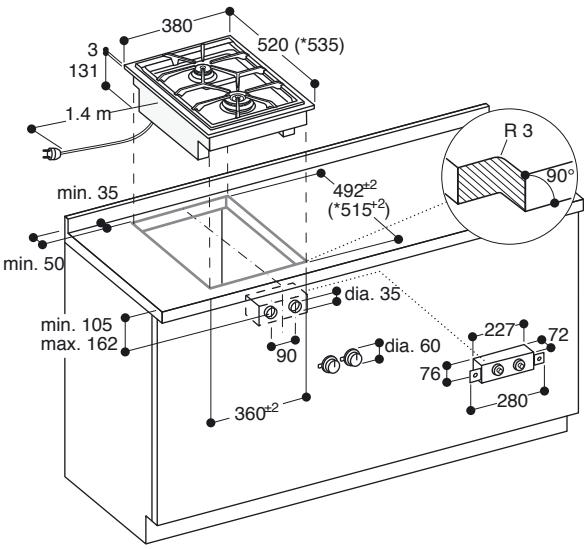

* with appliance cover or spacer batten.
See separate planning notes.

Installation of the control knob; installation standing proud of surrounding surfaces

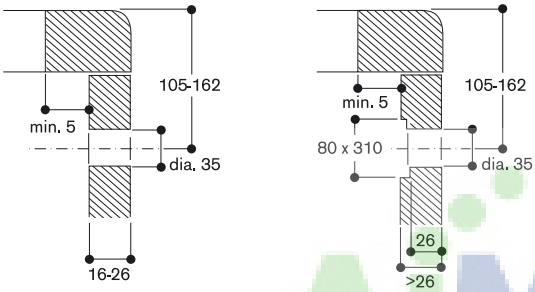

Gas connection

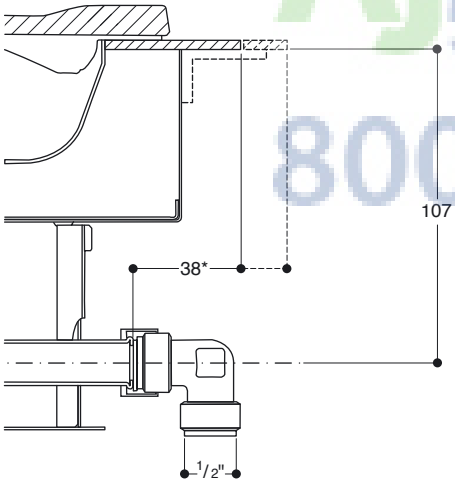

* 53 mm with appliance cover or spacer batten.

The gas connection is on the left-hand side, 123 mm from the centre of the appliance.

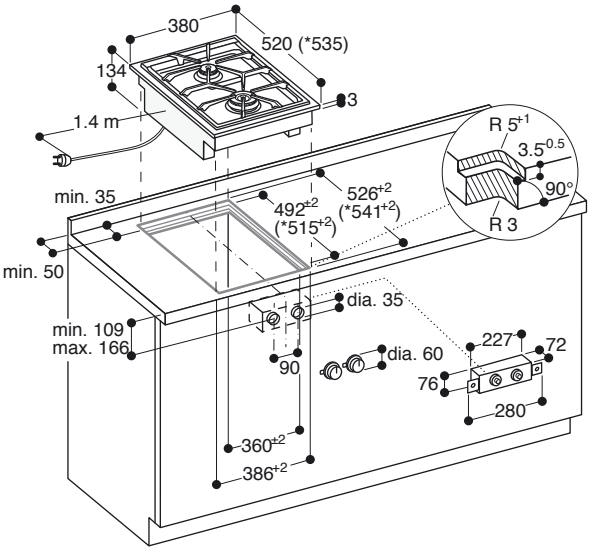

* with appliance cover or spacer batten.
See separate planning notes.

Installation of the control knob; installation flush with surrounding surfaces

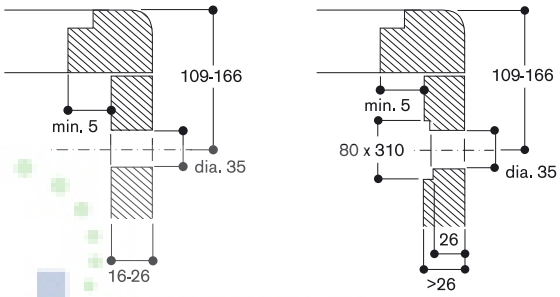

View from above

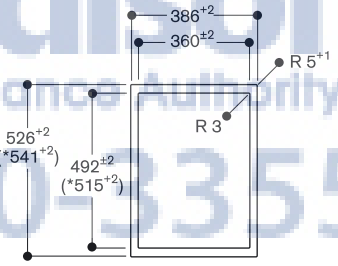

* with appliance cover or spacer batten
(observe the front and rear asymmetrical support, see separate notes "Installation with appliance cover/ spacer batten").

Longitudinal section

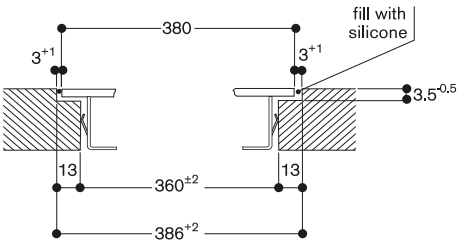

Cross-section

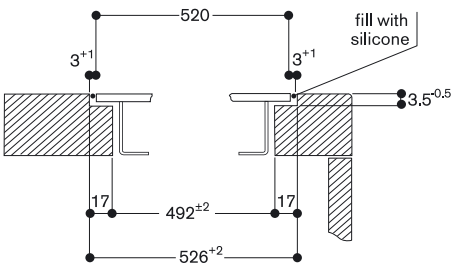

When installing with appliance cover or spacer batten, pay attention to the deeper cut-out and the front and rear groove width.

AjMadison
Your Appliance Authority™
800-570-3355

VG 414 110F
Stainless steel
Width 38 cm
Liquid gas 28 – 37 mbar
Wok burner with 5 KW

VG 414 210
Stainless steel
Width 38 cm
Natural gas 20 mbar
Wok burner with 6 KW

Installation accessories

VA 420 010
Connection strip for combination with other Vario appliances of the 400 series for surface installation

VA 420 011
Connection strip for combination with other Vario appliances of the 400 series for surface installation with appliance cover/adjustment strip

VA 420 000
Connection strip for combination with other Vario appliances of the 400 series for flush installation

VA 420 001
Connection strip for combination with other Vario appliances of the 400 series for flush installation with appliance cover/adjustment strip

VA 440 010
Stainless steel appliance cover with mounting strip

VA 450 400
Stainless steel adjustment strip 38 cm
Required accessory for combination of several Vario appliances of the 400 series with at least one appliance cover to compensate the appliance depth.

SV 401 090
Spindle extensions up to 140 mm

SV 401 205
Spindle extensions up to 300 mm

Special accessories

WP 400 001
Wok pan made of multiple-layer material
With round bottom and handle, ø 36 cm, 6 litres, height 10 cm.

Vario gas wok 400 series
VG 414

- Three-ring burner up to 6 kW
- Automatic fast ignition, electronic flame monitoring
- Solid stainless steel control knob
- Precision crafting of 3 mm stainless steel
- For surface installation with a visible edge or for flush installation
- Can be combined perfectly with other Vario appliances of the 400 series

Cooking zones
VG 414 110F
1 three-ring wok burner
(300 W – 5,000 W), suitable for pots up to max. ø 32 cm.

VG 414 210
1 three-ring wok burner
(300 W – 6,000 W), suitable for pots up to max. ø 32 cm.

Handling
Control knobs with cooking zone and output level markings.
One-handed operation.
Gas valve with fine control.

Features
Cast pan support with flat, continuous pot surface.
Brass burner rings.

Safety
Electronic flame monitoring with automatic re-ignition.
Automatic fast ignition.
Safety shut-off.

Planning notes
Depending on the type of installation (surface-mounted or flush-mounted, with or without an appliance cover), the specific location of the cut-out and the knob positions may vary.
If installing with the appliance cover VA 440 or adjustement strip VA 450 take into account the additional space required for the depth.
If combining several appliances with at least one appliance cover, the adjustment strip VA 450 is required to compensate for the depth of the appliance without the appliance cover.
If combining several Vario appliances of the 400 series, a connection strip VA 420 must be placed between the appliances. Depending on the type of installation, the corresponding connection strip must be provided.
In the cut-out, the installation system requires the side edge to be at least 10 mm for surface installation and at least 13 mm for flush installation.
Ensure a continuous cut surface of 90°.
The bearing capacity and stability, in the case of thin worktops in particular, must be supported using suitable substructures. Take into account the appliance weight and additional loads.
Additional instructions for flush installation:
Installation is possible in worktops made of stone, synthetics or solid wood. Heat resistance and watertight sealing of the cut edges must be observed. Concerning other materials please consult the worktop manufacturer.
The groove must be continuous and even, so that uniform placing of the appliance on the gasket is ensured.
Do not use discontinuous lining.
The joint width may vary due to size tolerances of the combinations and of the worktop cut-out.

Please read additional planning notes on page 116–123.

If installing several appliances in individual cut-outs allow for a division bar of minimum 50 mm between the individual cut-outs.
Control knobs to be integrated in the bottom cabinet at drawer level.
Panel thickness 16 – 26 mm.
The drawing "Installation of the control knob" must be observed if the panel is more than 26 mm thick (there must be a recess at the rear).
Special nozzles can be ordered as spare parts.
Plan for an electrical connection (the appliance is not operable without power supply).
Air intake from above.
No intermediate shelf required.
Rear panel and wall trims must be heat-resistant and consist of a non-flammable material.
A minimum lateral clearance of at least 150 mm from adjacent heat-sensitive furniture or contact surfaces must be observed or thermal insulation fitted.
If operated next to the downdraft ventilation VL 414, the air baffle AA 414 is recommended to ensure maximum performance of the cooktop.
With a total connected load of more than 12 kW local regulations concerning room ventilation, room size and combination of extraction or recirculation hoods must be observed.
Minimum clearance between gas cooktop(s) with more than 12 kW and ventilation hood 70 cm.
Appliance can be snapped into the worktop from above.
Appliance weight: approx. 16 kg.

Connection
Total connected load gas 5.0/6.0 kW.
Total connected load electric 15.0/15.0 W.
Connecting cable 1.4 m with plug.

AiMadison Your Appliance Authority™ 800-570-3355

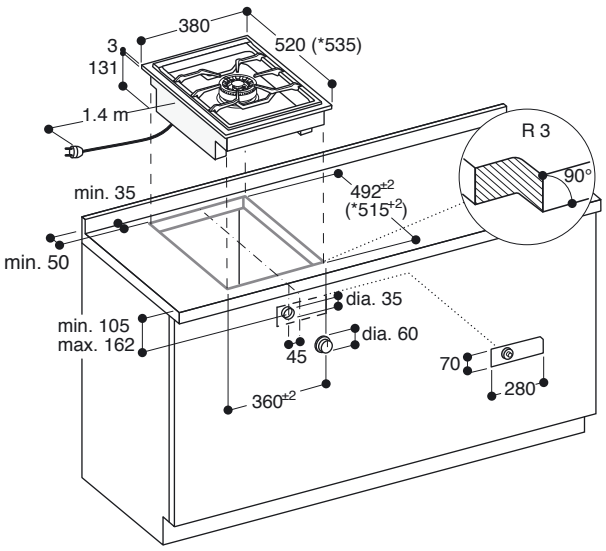

* with appliance cover or spacer batten.
See separate planning notes.

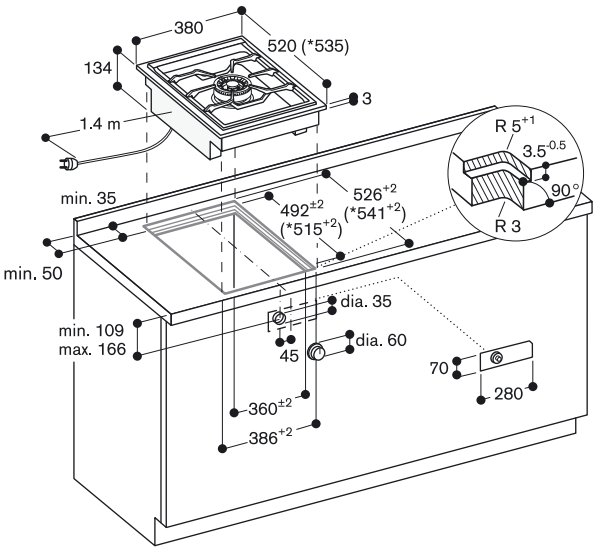

* with appliance cover or spacer batten
See separate planning notes.

Installation of the control knob; installation standing proud of surrounding surfaces

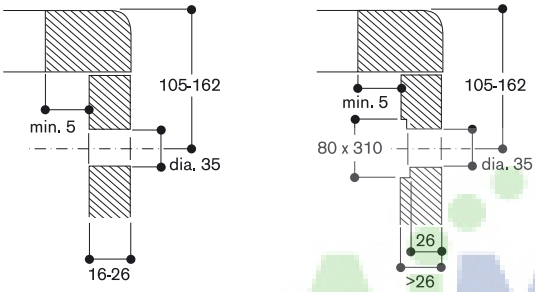

Possible axis extensions

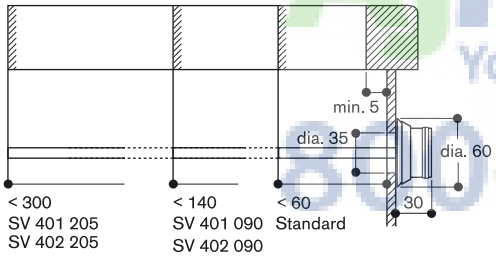

Gas connection

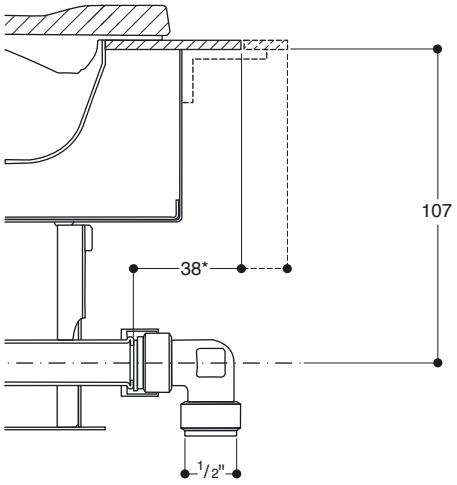

* 53 mm with appliance cover or spacer batten.

The gas connection is on the left-hand side, 123 mm from the centre of the appliance.

Installation of the control knob; installation flush with surrounding surfaces

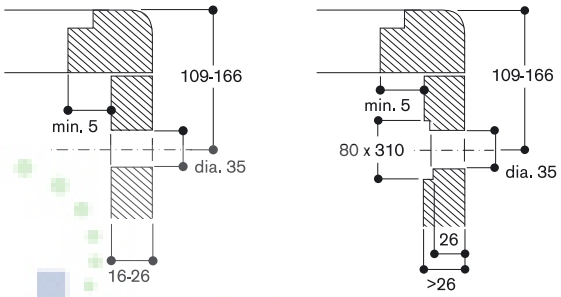

View from above

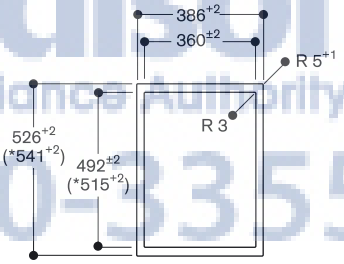

* with appliance cover or spacer batten
(observe the front and rear asymmetrical support, see separate notes "Installation with appliance cover/ spacer batten").

Longitudinal section

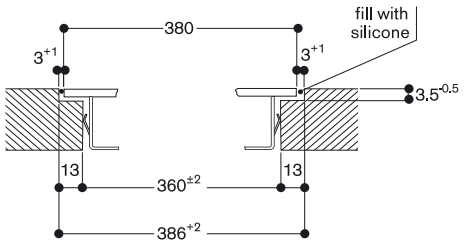

Cross-section

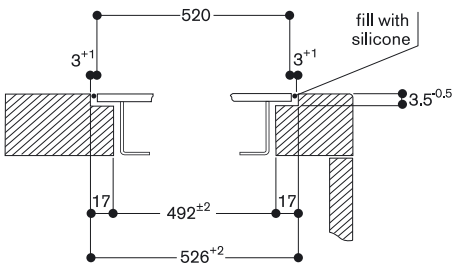

When installing with appliance cover or spacer batten, pay attention to the deeper cut-out and the front and rear groove width.

AJMadison
Your Appliance Authority™
800-570-3355

VG 424 110F
Stainless steel
Liquid gas 28 – 37 mbar
Width 38 cm

VG 424 210
Stainless steel
Width 38 cm
Natural gas 20 mbar

Installation accessories

VA 420 010
Connection strip for combination with other Vario appliances of the 400 series for surface installation

VA 420 011
Connection strip for combination with other Vario appliances of the 400 series for surface installation with appliance cover/adjustment strip

VA 420 000
Connection strip for combination with other Vario appliances of the 400 series for flush installation

VA 420 001
Connection strip for combination with other Vario appliances of the 400 series for flush installation with appliance cover/adjustment strip

VA 440 010
Stainless steel appliance cover with mounting strip

VA 450 400
Stainless steel adjustment strip 38 cm
Required accessory for combination of several Vario appliances of the 400 series with at least one appliance cover to compensate the appliance depth.

SV 402 090
Spindle extensions up to 140 mm

SV 402 205
Spindle extensions up to 300 mm

Vario gas cooktop 400 series
VG 424

- 2 two-ring burners, up to 4 kW
- Automatic fast ignition, electronic flame monitoring
- Solid stainless steel control knob
- Precision crafting of 3 mm stainless steel
- For surface installation with a visible edge or for flush installation
- Can be combined perfectly with other Vario appliances of the 400 series

Cooking zones
VG 424 110F
1 two-ring high output burner (165 W – 4,000 W), suitable for pots up to max. ø 28 cm.
1 two-ring standard output burner (165 W – 2,000 W), suitable for pots up to max. ø 28 cm.

VG 424 210
1 two-ring high output burner (165 W – 4,000 W), suitable for pots up to max. ø 28 cm.
1 two-ring standard output burner (165 W – 2,000 W), suitable for pots up to max. ø 28 cm.

Handling
Control knobs with illuminated ring, cooking zone and output level markings.
One-handed operation.
Gas valve with fine control.

Features
Cast pan support with flat, continuous pot surface.
Brass burner rings.

Safety
Electronic flame monitoring with automatic re-ignition.
Automatic fast ignition.
Safety shut-off.

Planning notes
Depending on the type of installation (surface-mounted or flush-mounted, with or without an appliance cover), the specific location of the cut-out and the knob positions may vary.
If installing with the appliance cover VA 440 or adjustement strip VA 450 take into account the additional space required for the depth.
If combining several appliances with at least one appliance cover, the adjustment strip VA 450 is required to compensate for the depth of the appliance without the appliance cover.
If combining several Vario appliances of the 400 series, a connection strip VA 420 must be placed between the appliances. Depending on the type of installation, the corresponding connection strip must be provided.
In the cut-out, the installation system requires the side edge to be at least 10 mm for surface installation and at least 13 mm for flush installation.
Ensure a continuous cut surface of 90°.
The bearing capacity and stability, in the case of thin worktops in particular, must be supported using suitable substructures. Take into account the appliance weight and additional loads.
Additional instructions for flush installation:
Installation is possible in worktops made of stone, synthetics or solid wood.
Heat resistance and watertight sealing of the cut edges must be observed. Concerning other materials please consult the worktop manufacturer.
The groove must be continuous and even, so that uniform placing of the appliance on the gasket is ensured.
Do not use discontinuous lining.
The joint width may vary due to size tolerances of the combinations and of the worktop cut-out.

Please read additional planning notes on page 116–123.

If installing several appliances in individual cut-outs allow for a division bar of minimum 50 mm between the individual cut-outs.
Control knobs to be integrated in the bottom cabinet at drawer level.
Panel thickness 16 – 26 mm.
The drawing "Installation of the control knob" must be observed if the panel is more than 26 mm thick (there must be a recess at the rear).
Special nozzles can be ordered as spare parts.
Plan for an electrical connection (the appliance is not operable without power supply).
Air intake from above.
No intermediate shelf required.
Rear panel and wall trims must be heat-resistant and consist of a non-flammable material.
A minimum lateral clearance of at least 150 mm from adjacent heat-sensitive furniture or contact surfaces must be observed or thermal insulation fitted.
If operated next to the downdraft ventilation VL 414, the air baffle AA 414 is recommended to ensure maximum performance of the cooktop.
With a total connected load of more than 12 kW local regulations concerning room ventilation, room size and combination of extraction or recirculation hoods must be observed.
Minimum clearance between gas cooktop(s) with more than 12 kW and ventilation hood 70 cm.
Appliance can be snapped into the worktop from above.
Appliance weight: approx. 16 kg.

Connection
Total connected load gas 6.0/6.0 kW.
Total connected load electric 15.0/15.0 W.
Connecting cable 1.4 m with plug.

AJMadison
Your Appliance Authority™
800-570-3355

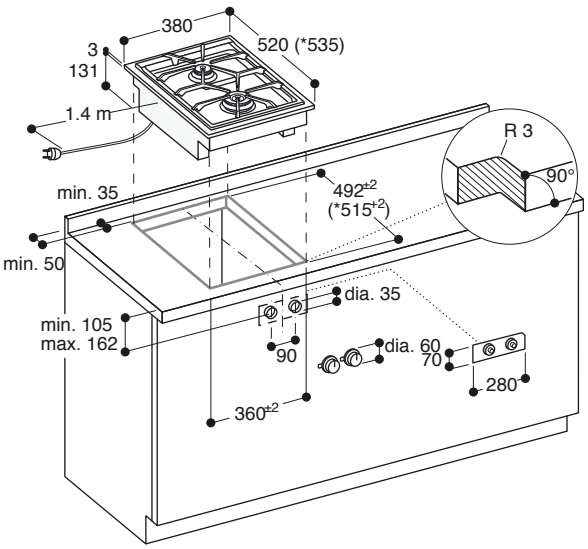

* with appliance cover or spacer batten.
See separate planning notes.

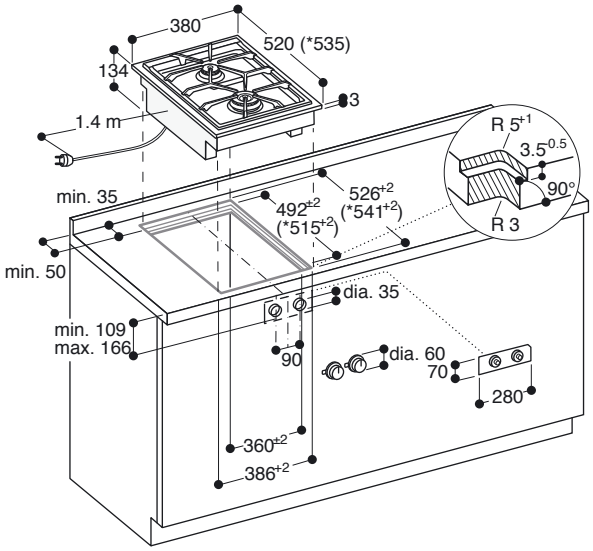

* with appliance cover or spacer batten.
See separate planning notes.

Installation of the control knob; installation standing proud of surrounding surfaces

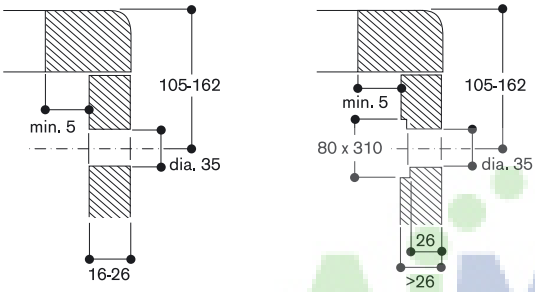

Possible axis extensions

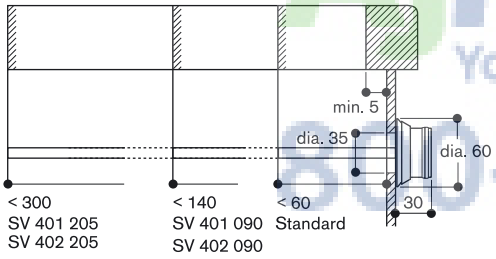

Gas connection

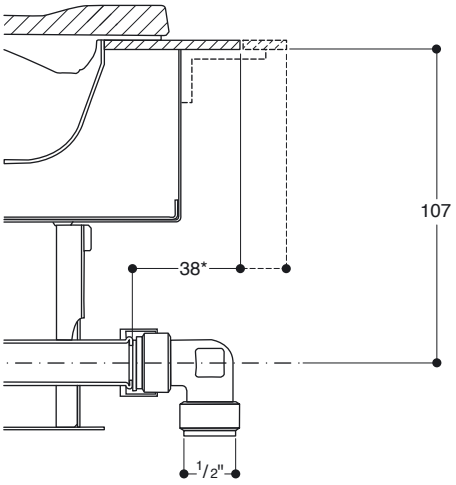

* 53 mm with appliance cover or spacer batten.

The gas connection is on the left-hand side, 123 mm from the centre of the appliance.

Installation of the control knob; installation flush with surrounding surfaces

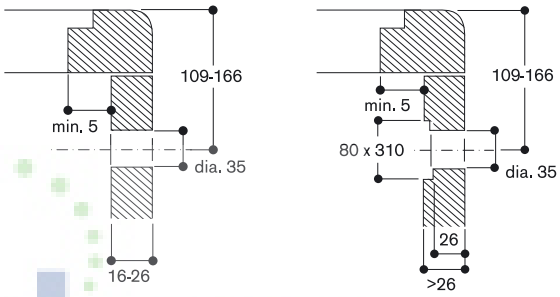

View from above

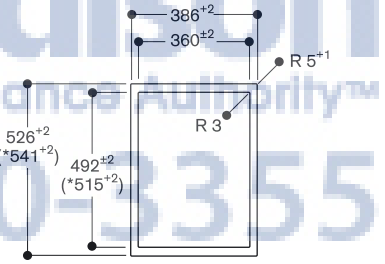

* with appliance cover or spacer batten
(observe the front and rear asymmetrical support, see separate notes "Installation with appliance cover/ spacer batten").

Longitudinal section

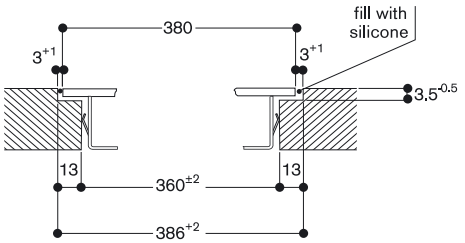

Cross-section

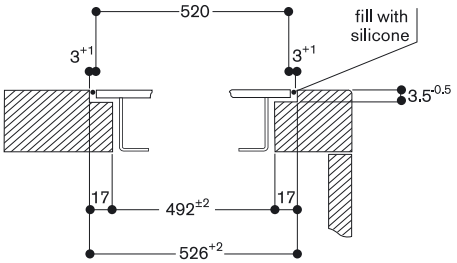

When installing with appliance cover or spacer batten, pay attention to the deeper cut-out and the front and rear groove width.

AJMadison
Your Appliance Authority™
800-570-3355

VP 414 110
Stainless steel
Width 38 cm

Included in the price
2 spatula

Installation accessories
VA 420 010
Connection strip for combination with other Vario appliances of the 400 series for surface installation

VA 420 011
Connection strip for combination with other Vario appliances of the 400 series for surface installation with appliance cover/adjustment strip

VA 420 000
Connection strip for combination with other Vario appliances of the 400 series for flush installation

VA 420 001
Connection strip for combination with other Vario appliances of the 400 series for flush installation with appliance cover/adjustment strip

VA 440 010
Stainless steel appliance cover with mounting strip

VA 450 400
Stainless steel adjustment strip 38 cm
Required accessory for combination of several Vario appliances of the 400 series with at least one appliance cover to compensate the appliance depth.

Vario Teppan Yaki 400 series
VP 414

- Cooking directly on the hard-chromed metal surface, without any pots or pans
- Exact temperature control up to 240 °C
- Optimum heat distribution
- Solid stainless steel control knob
- Precision crafting of 3 mm stainless steel
- For surface installation with a visible edge or for flush installation
- Can be combined perfectly with other Vario appliances of the 400 series

Cooking zones
Usable area W 31 x D 44 cm.

Handling
Control knobs with illuminated ring, cooking zone and temperature markings.
Electronic temperature control from 120 °C to 240 °C.

Features
Two zones, each 1,500 W, can be operated together as a complete surface or each halve separately.
Keeping warm setting.
Even with traces of use, always easy to clean like a cast pan.

Safety
Safety shut-off.

Planning notes
Depending on the type of installation (surface-mounted or flush-mounted, with or without an appliance cover), the specific location of the cut-out and the knob positions may vary.
If installing with the appliance cover VA 440 or adjustement strip VA 450 take into account the additional space required for the depth.
If combining several appliances with at least one appliance cover, the adjustment strip VA 450 is required to compensate for the depth of the appliance without the appliance cover.
If combining several Vario appliances of the 400 series, a connection strip VA 420 must be placed between the appliances. Depending on the type of installation, the corresponding connection strip must be provided.
In the cut-out, the installation system requires the side edge to be at least 10 mm for surface installation and at least 13 mm for flush installation.
Ensure a continuous cut surface of 90°.
The bearing capacity and stability, in the case of thin worktops in particular, must be supported using suitable substructures. Take into account the appliance weight and additional loads.
Additional instructions for flush installation:
Installation is possible in worktops made of stone, synthetics or solid wood. Heat resistance and watertight sealing of the cut edges must be observed. Concerning other materials please consult the worktop manufacturer.
The groove must be continuous and even, so that uniform placing of the appliance on the gasket is ensured.
Do not use discontinuous lining.

The joint width may vary due to size tolerances of the combinations and of the worktop cut-out.

Please read additional planning notes on page 116–123.

If installing several appliances in individual cut-outs allow for a division bar of minimum 50 mm between the individual cut-outs.
Built-in control panel to be integrated in the bottom cabinet at drawer level.
Panel thickness 16 – 26 mm.
The drawing "Installation of the control knob" must be observed if the panel is more than 26 mm thick (there must be a recess at the rear).
A minimum lateral clearance of at least 40 mm from adjacent heat-sensitive furniture or contact surfaces must be observed or thermal insulation fitted.
Appliance can be snapped into the worktop from above.
Appliance weight: approx. 14 kg.

Connection
Total connected load 3.0 kW.
Plan a connection cable.

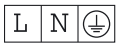

AJ Madison
Your Appliance Authority™
800-570-3355

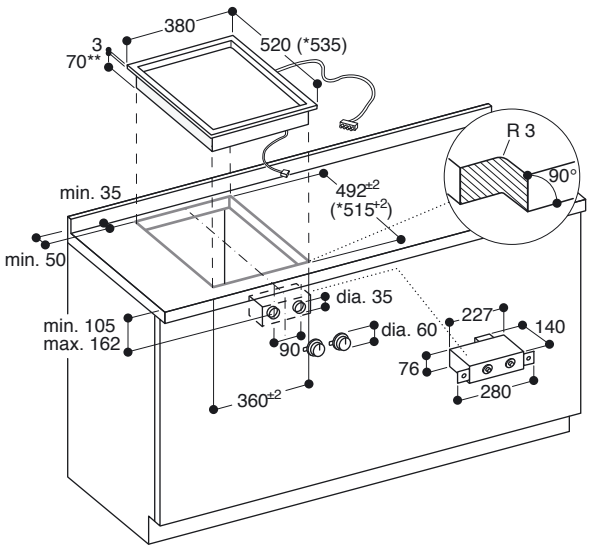

* with appliance cover or spacer batten.
See separate planning notes.
**80 mm in the area of the cable clip (right, centre).

Installation of the control knob; installation standing proud of surrounding surfaces

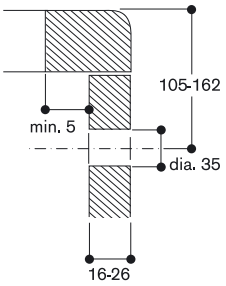

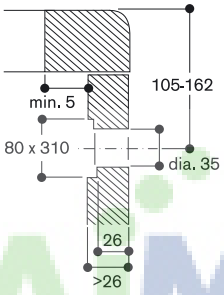

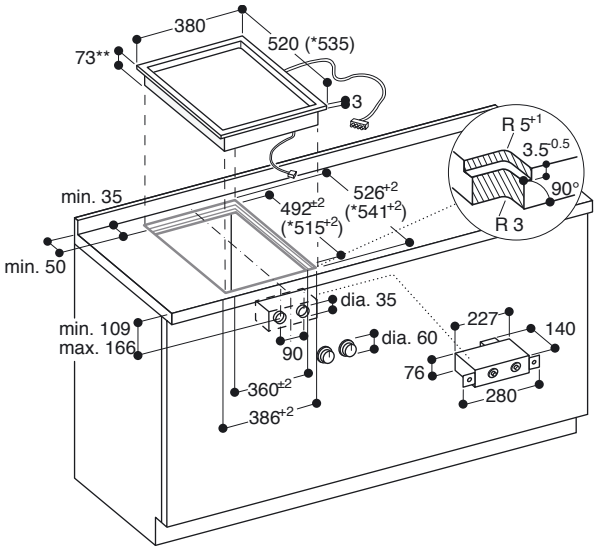

* with appliance cover or spacer batten.
See separate planning notes.
**83 mm in the area of the cable clip (right, centre).

Installation of the control knob; installation flush with surrounding surfaces

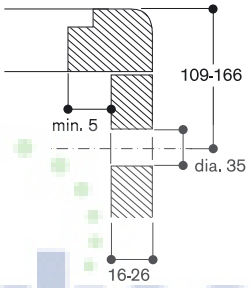

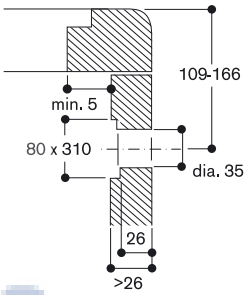

View from above

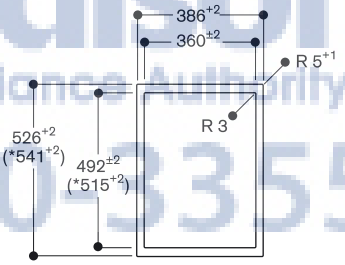

* with appliance cover or spacer batten
(observe the front and rear asymmetrical support,
see separate notes "Installation with appliance cover/
spacer batten").

Longitudinal section

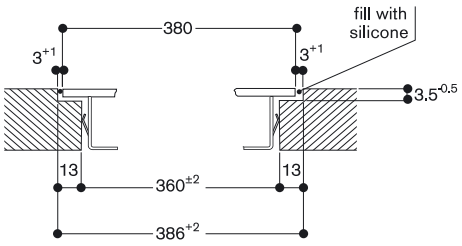

Cross-section

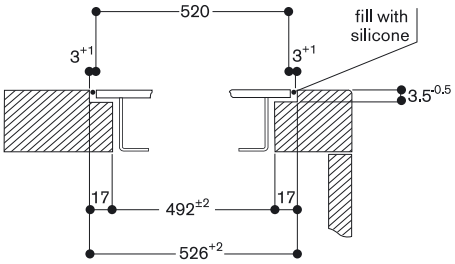

When installing with appliance cover or spacer batten, pay attention to the deeper cut-out and the front and rear groove width.

AjMadison
Your Appliance Authority™
800-570-3355

VR 414 110
Stainless steel
Width 38 cm

Included in the price
1 lava stone
1 cleaning brush
2 cast grills
1 grease collecting insert
1 Cast pan, half size

Installation accessories
VA 420 010
Connection strip for combination with other Vario appliances of the 400 series for surface installation
VA 420 011
Connection strip for combination with other Vario appliances of the 400 series for surface installation with appliance cover/adjustment strip
VA 420 000
Connection strip for combination with other Vario appliances of the 400 series for flush installation
VA 420 001
Connection strip for combination with other Vario appliances of the 400 series for flush installation with appliance cover/adjustment strip
VA 440 010
Stainless steel appliance cover with mounting strip
VA 450 400
Stainless steel adjustment strip 38 cm
Required accessory for combination of several Vario appliances of the 400 series with at least one appliance cover to compensate the appliance depth.

Special accessories
LV 030 000
Lava stones for refilling
VA 461 000
Cast pan, enamelled, half size
For Vario electric grill 400 series.
For simultaneous frying and grilling on two separate surfaces.
VA 461 001
Cast pan, enamelled, full size
For Vario electric grill 400 series.
For frying large quantities on one surface.

Vario electric grill 400 series
VR 414

- 2 separately controlled zones
- Cast pan, half size, for simultaneous frying and grilling on two separate surfaces
- Open cast grill, lava stones
- Solid stainless steel control knob
- Precision crafting of 3 mm stainless steel
- For surface installation with a visible edge or for flush installation
- Can be combined perfectly with other Vario appliances of the 400 series

Handling
Control knobs with illuminated ring, cooking zone and output level markings.
Electronic control in 12 output levels.

Features
Cooktop, lava stone trough and grease collecting insert from stainless steel.
2 independently controlled grilling elements (1,500 W).
Two-part cast grill.

Safety
Safety shut-off.

Planning notes
Depending on the type of installation (surface-mounted or flush-mounted, with or without an appliance cover), the specific location of the cut-out and the knob positions may vary.
If installing with the appliance cover VA 440 or adjustement strip VA 450 take into account the additional space required for the depth.
If combining several appliances with at least one appliance cover, the adjustment strip VA 450 is required to compensate for the depth of the appliance without the appliance cover.
If combining several Vario appliances of the 400 series, a connection strip VA 420 must be placed between the appliances. Depending on the type of installation, the corresponding connection strip must be provided.
In the cut-out, the installation system requires the side edge to be at least 10 mm for surface installation and at least 13 mm for flush installation.
Ensure a continuous cut surface of 90°.
The bearing capacity and stability, in the case of thin worktops in particular, must be supported using suitable substructures. Take into account the appliance weight and additional loads.
Additional instructions for flush installation:
Installation is possible in worktops made of stone, synthetics or solid wood. Heat resistance and watertight sealing of the cut edges must be observed. Concerning other materials please consult the worktop manufacturer.
The groove must be continuous and even, so that uniform placing of the appliance on the gasket is ensured.
Do not use discontinuous lining.
The joint width may vary due to size tolerances of the combinations and of the worktop cut-out.

Please read additional planning notes on page 116–123.

If installing several appliances in individual cut-outs allow for a division bar of minimum 50 mm between the individual cut-outs.
Built-in control panel to be integrated in the bottom cabinet at drawer level.
Panel thickness 16 – 26 mm.
The drawing "Installation of the control knob" must be observed if the panel is more than 26 mm thick (there must be a recess at the rear).
A minimum lateral clearance of at least 100 mm from adjacent heat-sensitive furniture or from the wall must be observed.
Appliance can be snapped into the worktop from above.
Appliance weight: approx. 26 kg.

Connection
Total connected load 3.0 kW.
Plan a connection cable.

AJ Madison
Home Appliance Authority™
800-570-3355

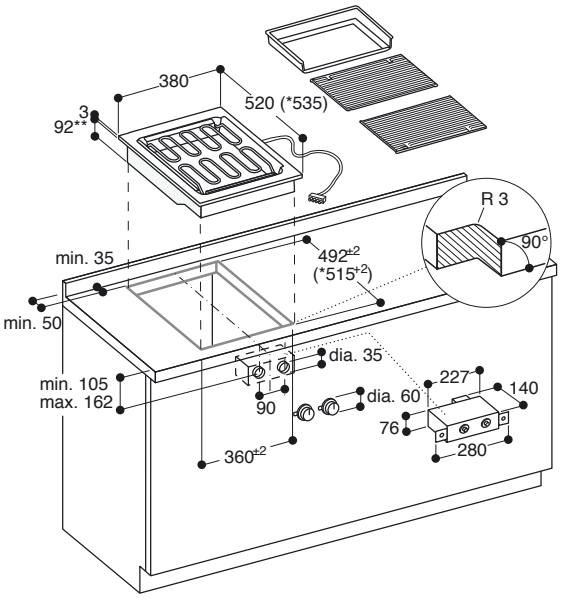

* with appliance cover or spacer batten.
See separate planning notes.
**102 mm in the area of the cable clip (right, centre).

Installation of the control knob; installation standing proud of surrounding surfaces

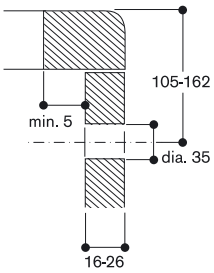

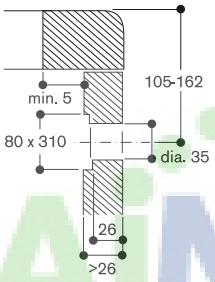

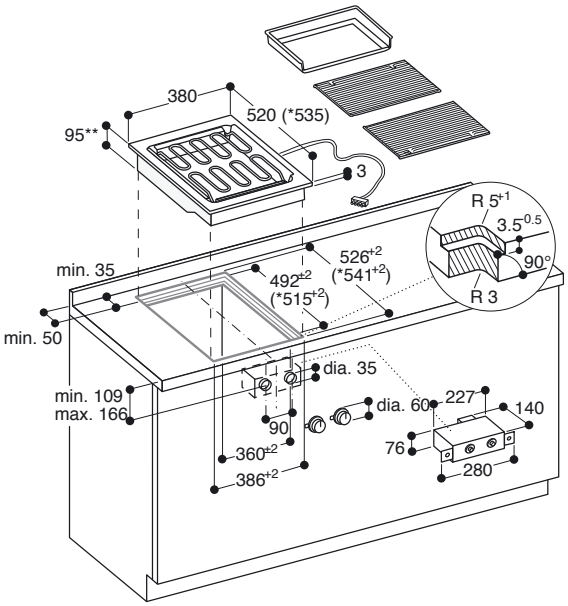

* with appliance cover or spacer batten.
See separate planning notes.
**105 mm in the area of the cable clip (right, centre).

Installation of the control knob; installation flush with surrounding surfaces

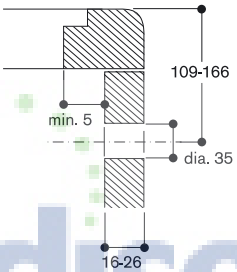

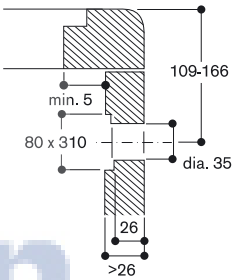

View from above

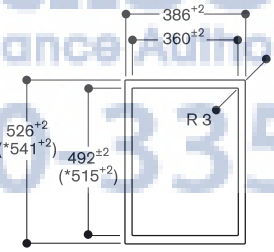

* with appliance cover or spacer batten
(observe the front and rear asymmetrical support, see separate notes "Installation with appliance cover/ spacer batten").

Longitudinal section

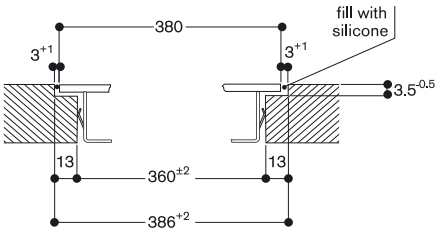

Cross-section

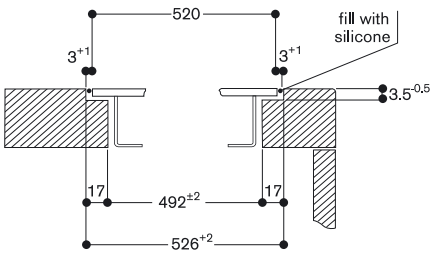

When installing with appliance cover or spacer batten, pay attention to the deeper cut-out and the front and rear groove width.

AjMadison
Your Appliance Authority™
800-570-3355

VK 414 110
Stainless steel
Width 38 cm

Included in the price
1 cooking insert
1 glass cover
1 hand grip
1 residuary filter
1 water drain valve

Installation accessories
AG 050 000
Drain installation set with check valve drain set (DN 40) and connecting sleeve (½" on 1½")
AG 060 000
Drain installation set enables drainage of cooking liquid into a suitable receptacle
VA 420 010
Connection strip for combination with other Vario appliances of the 400 series for surface installation
VA 420 011
Connection strip for combination with other Vario appliances of the 400 series for surface installation with appliance cover/adjustment strip
VA 420 000
Connection strip for combination with other Vario appliances of the 400 series for flush installation
VA 420 001
Connection strip for combination with other Vario appliances of the 400 series for flush installation with appliance cover/adjustment strip
VA 440 010
Stainless steel appliance cover with mounting strip
VA 450 400
Stainless steel adjustment strip 38 cm
Required accessory for combination of several Vario appliances of the 400 series with at least one appliance cover to compensate the appliance depth.

Special accessories
FK 023 000
Pasta basket
GE 020 010
Unperforated cooking insert
GE 020 020
Perforated cooking insert

Vario steamer 400 series
VK 414

- Steaming in cooktop size
- Exact water temperature control from 45 °C to 95 °C
- Cooking on two levels, without flavour transfer
- Solid stainless steel control knob
- Precision crafting of 3 mm stainless steel
- For surface installation with a visible edge or for flush installation
- Can be combined perfectly with other Vario appliances of the 400 series

Cooking zones
Water capacity 1 to 6 litres.

Handling
Control knobs with illuminated ring, temperature markings and outlet water.
Electronic water temperature control from 45 °C to 95 °C, in 5 °C steps.

Features
Steam cooking level with electronic steam control for pressureless cooking.
Automatic boiling point detection.
Motor-driven 1/2" water drain valve.

Safety
Safety shut-off.

Planning notes
Depending on the type of installation (surface-mounted or flush-mounted, with or without an appliance cover), the specific location of the cut-out and the knob positions may vary.
If installing with the appliance cover VA 440 or adjustement strip VA 450 take into account the additional space required for the depth.
If combining several appliances with at least one appliance cover, the adjustment strip VA 450 is required to compensate for the depth of the appliance without the appliance cover.
If combining several Vario appliances of the 400 series, a connection strip VA 420 must be placed between the appliances. Depending on the type of installation, the corresponding connection strip must be provided.
In the cut-out, the installation system requires the side edge to be at least 10 mm for surface installation and at least 13 mm for flush installation.
Ensure a continuous cut surface of 90°.
The bearing capacity and stability, in the case of thin worktops in particular, must be supported using suitable substructures. Take into account the appliance weight and additional loads.
Additional instructions for flush installation:
Installation is possible in worktops made of stone, synthetics or solid wood. Heat resistance and watertight sealing of the cut edges must be observed. Concerning other materials please consult the worktop manufacturer.
The groove must be continuous and even, so that uniform placing of the appliance on the gasket is ensured.
Do not use discontinuous lining.
The joint width may vary due to size tolerances of the combinations and of the worktop cut-out.

Please read additional planning notes on page 116–123.

If installing several appliances in individual cut-outs allow for a division bar of minimum 50 mm between the individual cut-outs.
Built-in control panel to be integrated in the bottom cabinet at drawer level.
Panel thickness 16 – 26 mm.
The drawing "Installation of the control knob" must be observed if the panel is more than 26 mm thick (there must be a recess at the rear).
Seal the worktop cutout.
VK 414 and VF 414 must not be installed directly next to each other.
A minimum lateral clearance of at least 40 mm from adjacent heat-sensitive furniture.
In case of suspended cabinets a ventilation hood must be installed above the steamer.
If a cover is fitted, the glass lid must be removed when closing it.
Appliance can be snapped into the worktop from above.
Appliance weight: approx. 16 kg.

Connection
Total connected load 2.0 kW.
Plan a connection cable.

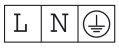

Appliance Authority™
800-570-3355

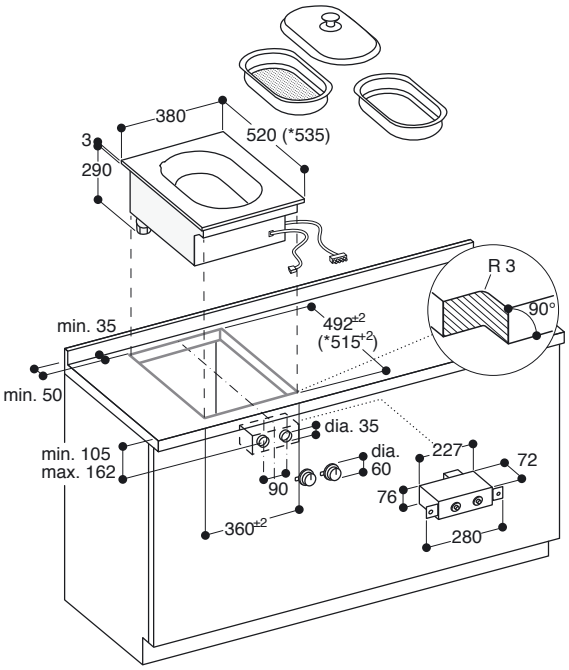

* with appliance cover or spacer batten.
See separate planning notes.

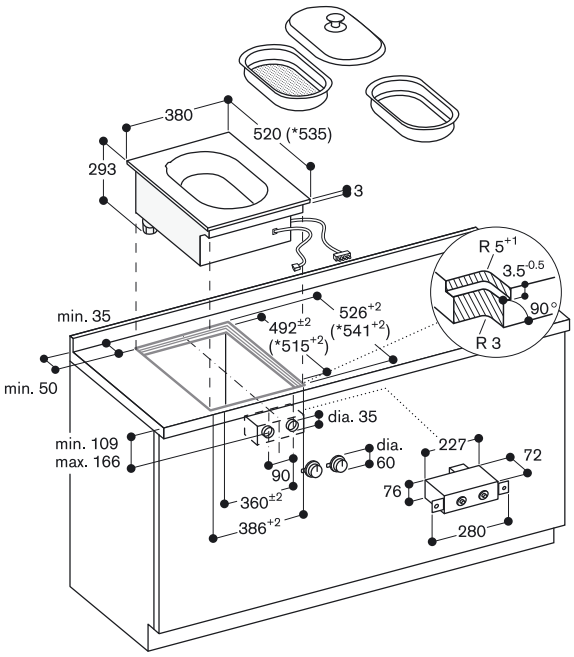

* with appliance cover or spacer batten.
See separate planning notes.

Installation of the control knob; installation standing proud of surrounding surfaces

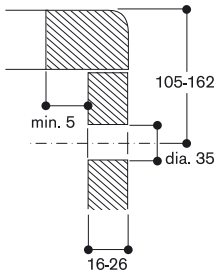

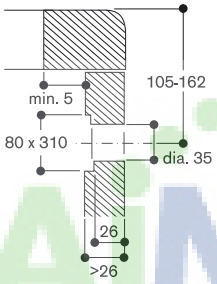

Installation of the control knob; installation flush with surrounding surfaces

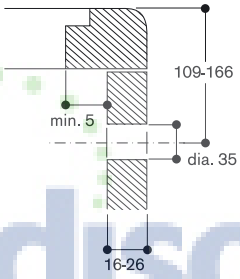

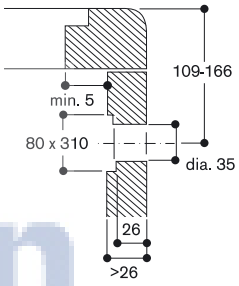

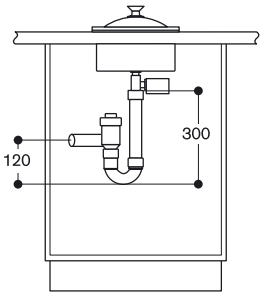

Drainage connection present in the bottom cupboard:
For a fixed connection without free fall section as per DIN 1986 Part 1, a non-return valve must be installed.
Recommendation: AG 050 000 Drain installation set.

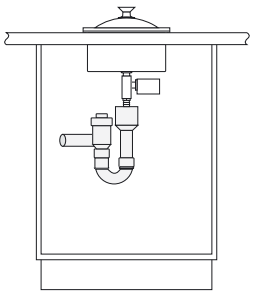

Sewer connection present in the base unit:
If there is a fixed connection with a free fall section as per DIN 1986 Part 1, it is recommended that you install a non-return valve.
Recommendation: AG 050 000 drain installation set.

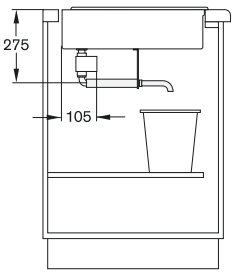

Drainage into a water-collecting receptacle (e.g. saucepan).
Only possible with AG 060 000 drain installation set.

Keep bottom drain valve at the back accessible through the door in the base unit.

View from above

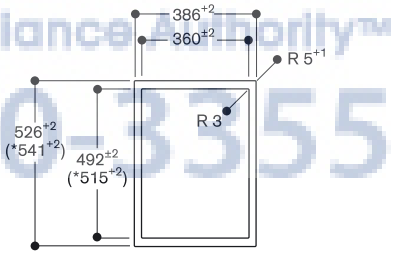

* with appliance cover or spacer batten
(observe the front and rear asymmetrical support,
see separate notes "Installation with appliance cover/

Longitudinal section

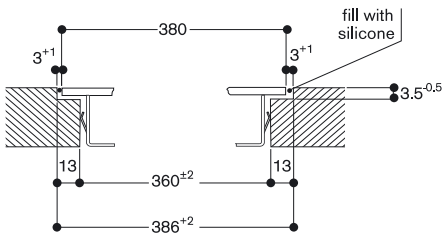

Cross-section

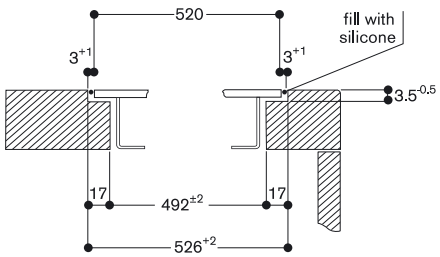

When installing with appliance cover or spacer batten, pay attention to the deeper cut-out and the front and rear groove width.

AjMadison
Your Appliance Authority™
800-570-3355

VF 414 110
Stainless steel
Width 38 cm

Included in the price
1 deep frying basket

Installation accessories
VA 420 010
Connection strip for combination with other Vario appliances of the 400 series for surface installation
VA 420 011
Connection strip for combination with other Vario appliances of the 400 series for surface installation with appliance cover/adjustment strip
VA 420 000
Connection strip for combination with other Vario appliances of the 400 series for flush installation
VA 420 001
Connection strip for combination with other Vario appliances of the 400 series for flush installation with appliance cover/adjustment strip
VA 440 010
Stainless steel appliance cover with mounting strip
VA 450 400
Stainless steel adjustment strip 38 cm
Required accessory for combination of several Vario appliances of the 400 series with at least one appliance cover to compensate the appliance depth.

Vario deep fryer 400 series
VF 414

- Three-zone basin, without flavour transfer
- Exact temperature control, no drop in output
- Integrated frying basket suspension
- Solid stainless steel control knob
- Precision crafting of 3 mm stainless steel
- For surface installation with a visible edge or for flush installation
- Can be combined perfectly with other Vario appliances of the 400 series

Cooking zones
Three-zone basin.
Oil capacity 3.5 litres.

Handling
Control knobs with illuminated ring, oil/fat selection and temperature marking.
Electronic temperature control from 135 °C to 190 °C, in 5 °C steps.

Features
Cleaning setting.
Gentle fat melting setting.
Foaming zone.
Frying zone.
Cold oil zone.
Swing-out heating element (3,000 W).

Safety
Oil drain valve with child lock.
Safety shut-off.

Planning notes
Depending on the type of installation (surface-mounted or flush-mounted, with or without an appliance cover), the specific location of the cut-out and the knob positions may vary.
If installing with the appliance cover VA 440 or adjustement strip VA 450 take into account the additional space required for the depth.
If combining several appliances with at least one appliance cover, the adjustment strip VA 450 is required to compensate for the depth of the appliance without the appliance cover.
If combining several Vario appliances of the 400 series, a connection strip VA 420 must be placed between the appliances. Depending on the type of installation, the corresponding connection strip must be provided.
In the cut-out, the installation system requires the side edge to be at least 10 mm for surface installation and at least 13 mm for flush installation.
Ensure a continuous cut surface of 90°.
The bearing capacity and stability, in the case of thin worktops in particular, must be supported using suitable substructures. Take into account the appliance weight and additional loads.
Additional instructions for flush installation:
Installation is possible in worktops made of stone, synthetics or solid wood. Heat resistance and watertight sealing of the cut edges must be observed. Concerning other materials please consult the worktop manufacturer.
The groove must be continuous and even, so that uniform placing of the appliance on the gasket is ensured.
Do not use discontinuous lining.
The joint width may vary due to size tolerances of the combinations and of the worktop cut-out.

Please read additional planning notes on page 116–123.

If installing several appliances in individual cut-outs allow for a division bar of minimum 50 mm between the individual cut-outs.
Plan a door in the bottom cabinet for operation of the oil drain valve.
Built-in control panel to be integrated in the bottom cabinet at drawer level.
Panel thickness 16 – 26 mm.
The drawing "Installation of the control knob" must be observed if the panel is more than 26 mm thick (there must be a recess at the rear).
VF 414 and VK 414 must not be installed directly next to each other.
A minimum clearance of at least 40 mm from the appliance edge to the wall or to adjacent furniture must be observed.
Appliance can be snapped into the worktop from above.
Appliance weight: approx. 14 kg.
.

Connection
Total connected load 3.0 kW.
Plan a connection cable.

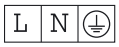

AJ Madison
Best Appliance Authority™
800-570-3355

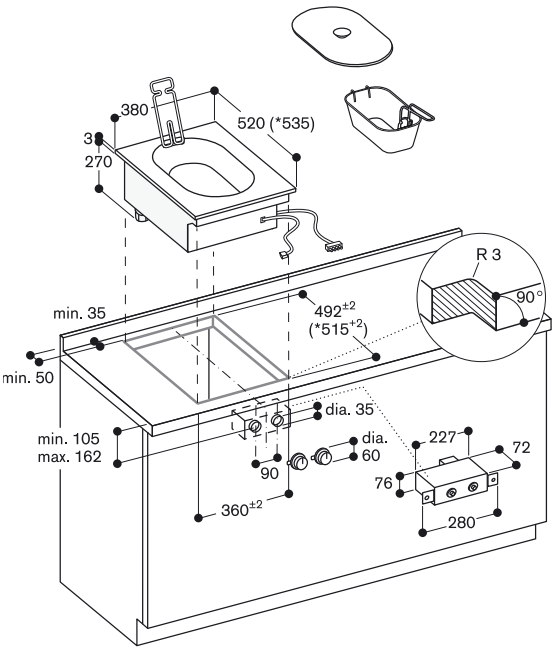

* with appliance cover or spacer batten.
See separate planning notes.

Installation of the control knob; installation standing proud of surrounding surfaces

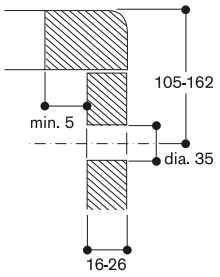

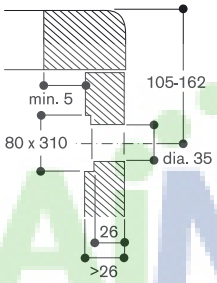

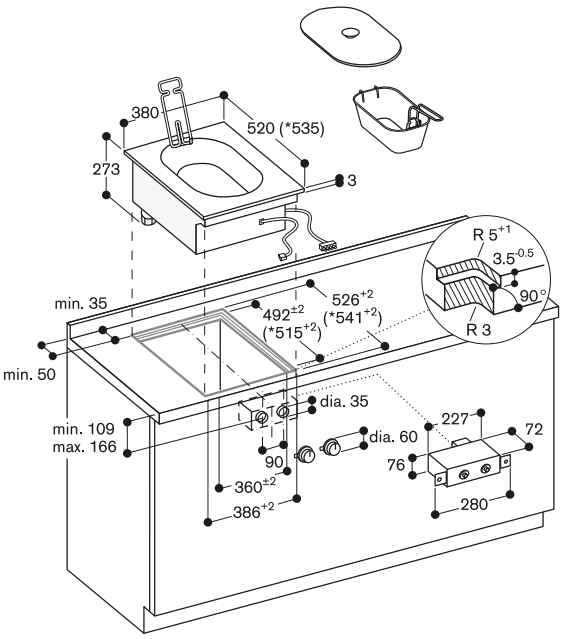

* with appliance cover or spacer batten.
See separate planning notes.

Installation of the control knob; installation flush with surrounding surfaces

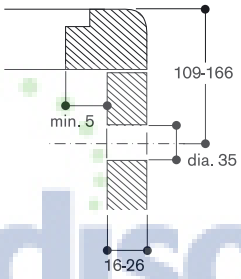

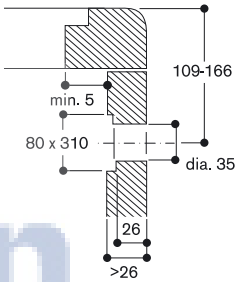

View from above

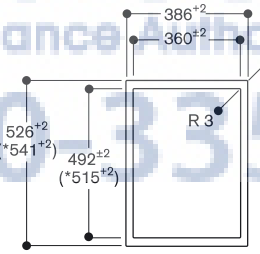

* with appliance cover or spacer batten
(observe the front and rear asymmetrical support,
see separate notes "Installation with appliance cover/
spacer batten").

Longitudinal section

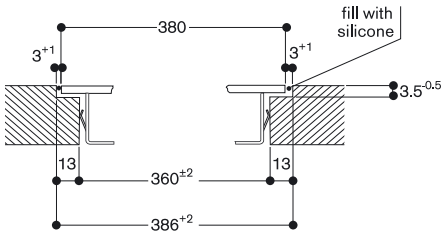

Cross-section

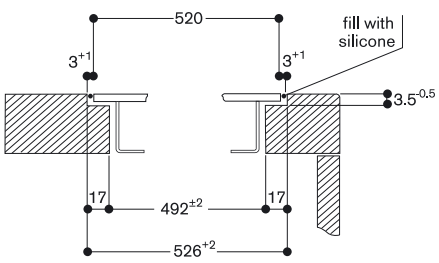

When installing with appliance cover or spacer batten, pay attention to the deeper cut-out and the front and rear groove width.

AjMadison
Your Appliance Authority™
800-570-3355

VL 414 110
Stainless steel
Ventilation element
Air extraction/recirculation with remote fan unit AR 400/401/403/413
Without motor and control knob

Necessary installation accessories

AA 490 110
Vario control knob ventilation 400 series
Stainless steel
For operation of one remote fan unit AR 400/401/403/413
In combination with up to four ventilation elements VL 414 connected to one remote fan unit
Solid stainless steel control knob
Can be combined perfectly with other Vario appliances of the 400 series

Installation accessories

AD 724 040
Connection piece for cylindrical duct DN 125

AD 724 041
Connection piece for cylindrical duct DN 125
Necessary for installation to left or right side of VL 414.

AD 854 046
Flat duct system with conducting fins
Connection piece VL 414 for DN 150 flat rectangular

AS 070 000
Connection piece for extension in the case of installation next to VK or VF

VA 420 010
Connection strip for combination with other Vario appliances of the 400 series for surface installation

VA 420 011
Connection strip for combination with other Vario appliances of the 400 series for surface installation with appliance cover/adjustment strip

VA 420 000
Connection strip for combination with other Vario appliances of the 400 series for flush installation

VA 420 001
Connection strip for combination with other Vario appliances of the 400 series for flush installation with appliance cover/adjustment strip

VA 450 110
Stainless steel adjustment strip 11 cm
Required accessory for combination of several Vario appliances of the 400 series with at least one appliance cover to compensate the appliance depth.

Special accessories

AA 414 010
Air baffle for combination with gas cooktops

Installation accessories for the air recirculation ducts you will find at the pages 236–239.

Vario downdraft ventilation 400 series
VL 414

- Highly efficient ventilation system at the cooktop
- Up to 4 ventilation elements can be connected to one remote fan unit, operated using one control knob AA 490
- Flexible power distribution, precise extraction of cooking vapours only at the open ventilation elements
- Precision crafting of 3 mm stainless steel
- For surface installation with a visible edge or for flush installation
- Can be combined perfectly with other Vario appliances of the 400 series
- Compact ducting in connection with flat rectangular pipes AD 8..
- Minimal planning and easy installation for air recirculation

Output
Maximum air output in combination with remote fan units s. table remote fan units on page 252/253.
Sound power level depends on the built-in situation.

Features
Manual opening of the ventilation element.
Closing element made of stainless steel, dishwasher-safe.
Metal grease filter with grease drip tray, dishwasher-safe.
Sensor-controlled operation of the extractor fan if at least one ventilation element VL 414 is open.
No duct connection piece included.

Planning notes
Depending on the type of installation (surface-mounted or flush-mounted, with or without an appliance cover), the specific location of the cut-out and the knob positions may vary.
If installing with the appliance cover VA 440 or adjustement strip VA 450 take into account the additional space required for the depth.
If combining several appliances with at least one appliance cover, the adjustment strip VA 450 is required to compensate for the depth of the appliance without the appliance cover.
If combining several Vario appliances of the 400 series, a connection strip VA 420 must be placed between the appliances. Depending on the type of installation, the corresponding connection strip must be provided.
In the cut-out, the installation system requires the side edge to be at least 10 mm for surface installation and at least 13 mm for flush installation.
Ensure a continuous cut surface of 90°.
The bearing capacity and stability, in the case of thin worktops in particular, must be supported using suitable substructures. Take into account the appliance weight and additional loads.
Additional instructions for flush installation:
Installation is possible in worktops made of stone, synthetics or solid wood. Heat resistance and watertight sealing of the cut edges must be observed. Concerning other materials please consult the worktop manufacturer.
The groove must be continuous and right, so that uniform placing of the appliance on the gasket is ensured.
Do not use discontinuous lining.
The joint width may vary due to size tolerances of the combinations and of the worktop cut-out.

Please read additional planning notes on page 116–123.

If installing several appliances in individual cut-outs allow for a division bar of minimum 50 mm between the individual cut-outs.
Air extraction operation in combination with remote fan units AR 400/401/403 or recirculation mode with AR 413.
Please refer to page 228–233 for recommended configurations of downdraft ventilations and remote fan units and the needed ducting elements.
Maximum cooktop width between two VL: 60 cm.
If operated next to gas appliances, the air baffle AA 414 010 is recommended to ensure maximum performance of the cooktop.
If installed next to gas appliances, flat ducts must not be used for the piping up to the fan unit.
If installed next to VP 414, the flat duct must not be positioned underneath the VP 414.
For maximum duct lengths use Gaggenau flat rectangular ducts AD 8... or Naber-System Compair flow. Other flat ducts are not permitted!
Pipe connection pieces must be ordered separately as installation accessories. Connection NW 125 round on the bottom with AD 724 040, on the sides with AD 724 040 and AD 724 041.
Connection NW 150 flat ducting on the side with AD 854 042.
Connection of 2 VL with ducting 2x DN 125 cylindrical or 2x DN 150 rectangular at remote fan AR 4.. .
For leading through the floor DN 150 cylindrical with connection of 2 DN 125 cylindrical use Y-joint AD 754 044.
Direct connection of 3 or 4 VL 414 only on one AR 400 140, without air-collector or Y-joint.
Please ensure when installing the exhaust air ducting that no sharp bends are caused and that the cross-section of the ducting is not constricted in any way.
For downdraft configurations with maximum lengths of exhaust air ducts go to Rodun at www.gaggenau.com.
Appliance can be snapped into the worktop from above. Additional fixing by clamps accessible from above, clamping range 30-50 mm.
Appliance weight: approx. 3 kg.

Connection
Connection cable 2.0 m between ventilation element VL 414 and control knob AA 490.

AiMadison Your Appliance Authority™ 800-570-3355

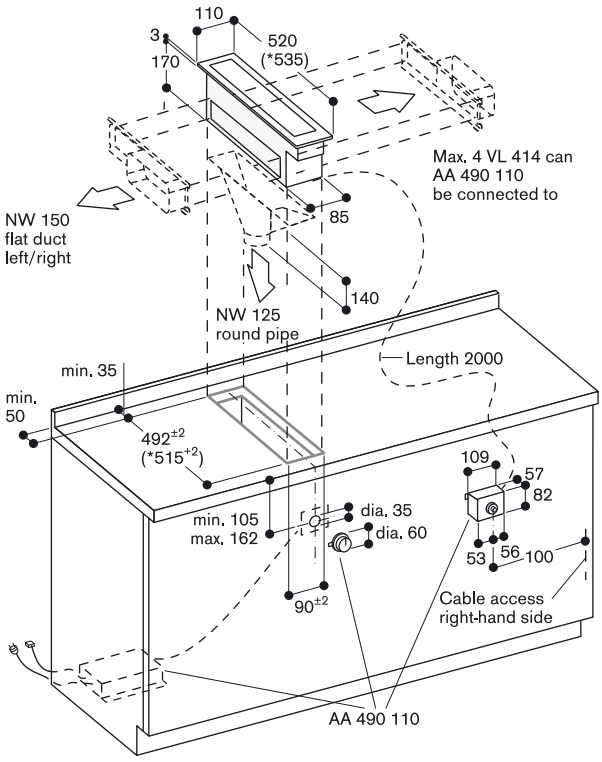

* with spacer batten

Flat duct pipe connection left/right
NW 150 with AD 854 046
Circular duct pipe connection, bottom
NW 125 with AD 724 040
Circular duct pipe connection left/right
NW 125 with AD 724 040 + AD 724 041

See separate planning notes for
- positioning of control knob
- configuration for flexible power distribution

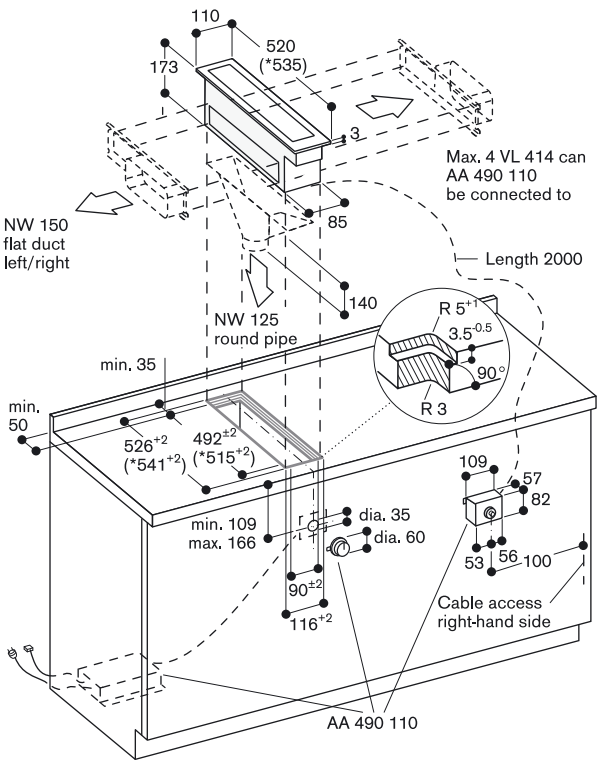

* with spacer batten

Flat duct pipe connection left/right
NW 150 with AD 854 046
Circular duct pipe connection, bottom
NW 125 with AD 724 040
Circular duct pipe connection left/right
NW 125 with AD 724 040 + AD 724 041

See separate planning notes for
- positioning of control knob
- configuration for flexible power distribution

VL 414 with AD 724 040/041

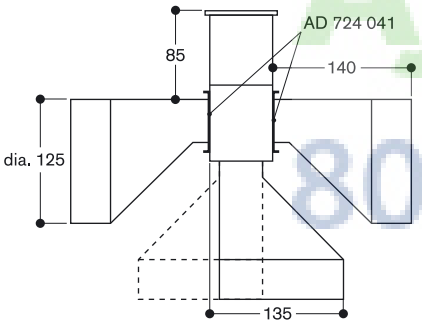

View from above

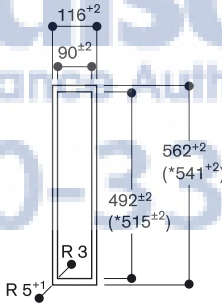

* With spacer batten

AD 854 046

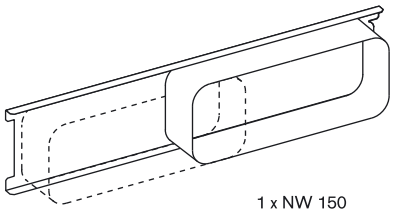

1 x NW 150
variable installation

Longitudinal section

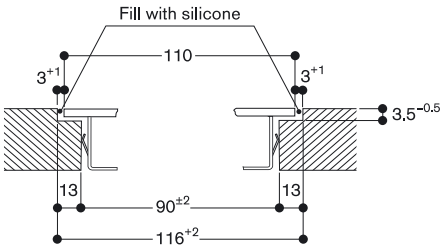

AS 070 000

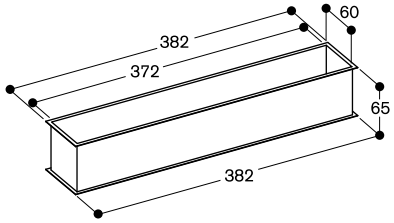

Cross-section

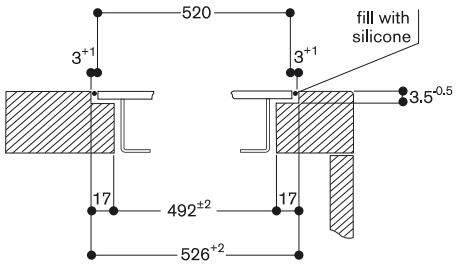

When installing with appliance cover or spacer batten, pay attention to the deeper cut-out and the front and rear groove width.

AjMadison
Your Appliance Authority™
800-570-3355

AA 490 110
Stainless steel

Installation accessories

AA 090 100
Circuit amplifier for connecting two remote fan units

Vario control knob ventilation 400 series
AA 490

- For operation of one remote fan unit AR 400/401/403/413
- In combination with up to four ventilation elements VL 414 connected to one remote fan unit
- Solid stainless steel control knob
- Can be combined perfectly with other Vario appliances of the 400 series

Handling
Control knob with illuminated ring and output marking.

Features
3 electronically controlled output levels.
Intensive mode.
Run-on function.
Sensor-controlled operation of the extractor fan if at least one ventilation element VL 414 is open.

Planning notes
Positioning of the control knob at any location between Vario cooking appliances, see configurations on page 122.
If connecting two remote fan units AR 4.. to ventilation elements VL 414, two control knobs AA 490 must be used.
When installing a ventilation hood with air extraction mode and a chimney-vented fireplace, the hood's power supply line needs a suitable safety switch.
The separate electronics housing is to be installed so that it is accessible.

Connection
Total connected load 365 – 1,040 W.
Connecting cable 1.75 m with plug.

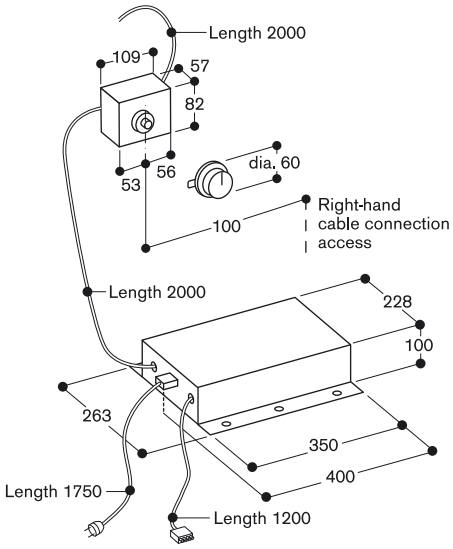

AJMadison
Your Appliance Authority™
800-570-3355

AjMadison
Your Appliance Authority™
800-570-3355

AL 400 120
Stainless steel
Width 120 cm
Air extraction/recirculation with remote fan unit AR 400/401/403/413
Motorless

AL 400 190
Stainless steel
Width 90 cm
Air extraction/recirculation with remote fan unit AR 400/401/403/413
Motorless

Installation accessories

AA 010 410
Air exhaust grille recirculation mode
Stainless steel coloured, 90 cm, including installation fittings, height adjustable.

AA 409 400
Furniture support 86 cm for table ventilation 106/90 cm
Recommended as bearer for the worktop, instead of a cabinet frame.

AA 409 430
Furniture support 116 cm for table ventilation 136/120 cm
Recommended as bearer for the worktop, instead of a cabinet frame.

AD 754 045
Connection piece for 2 cylindrical ducts DN 150
Fitting AL 400, front or back side.

AD 854 043
Connection piece for 2 flat ducts DN 150
Fitting AL 400, bottom side.

AD 854 045
Connection piece for 2 flat ducts DN 150
Fitting AL 400, front or back side.

ZB 020 090
Ventilation grille stainless steel
Extension piece for 30 mm, necessary for height adjustment.
Order 1 for height adjustment of 31-60 mm.
Order 2 for height adjustment of 61-70 mm.

Table ventilation
AL 400

- Telescopic table ventilation for combination with all Gaggenau cooktops, completely retractable when not in use
- Dimmable LED light for illumination of the whole cooktop
- Precision crafting of 3 mm stainless steel
- For surface installation with a visible edge or for flush installation
- Can be combined perfectly with other Vario appliances of the 400 series

Output
Maximum air output in combination with remote fan units s. table remote fan units on page 252/253.
Sound power level depends on the built-in situation.

Features
3 electronically controlled output levels.
Intensive mode.
Interval ventilation.
Run-on function.
Grease filter saturation indicator.
Cartridge-type filter, dishwasher-safe.
LED light.
Spare covers for closing air outlets.
No duct connection piece included.

Planning notes
AL 400 120 (AL 400 190)
For operation with 4 (3) Vario 200 series cooktops, 3 (2) Vario 400 series cooktops or a cooktop configuration of up to 120 (92 cm) wide.
Max. output of induction and glass ceramic cooktops 12 kW.
In combination with the cooktop CI 490, installation in 60 cm deep worktops is possible.
Operation of Vario cooking appliances only possible without appliance cover.
Installation is possible in worktops made of stone, synthetics or solid wood. Heat resistance and watertight sealing of the cut edges must be observed. Concerning other materials please consult the worktop manufacturer.
If the remote fan unit is installed within the bottom cabinet and if combined with VK or VF ensure accessibility to the outlets.
The remaining surface of the worktop (min. 50 mm) between the cut-outs must be reinforced with a support. It is recommended to use furniture support AA 409 400/430.
Ovens that do not exceed the maximum allowed cabinet temperature can be combined with the table ventilation if built-in situation permits.
Recommendation for stainless steel parts to match hood that have to be welded and polished: brushed grain 280.
Surfaces: Stainless steel 1.4301, ground and brushed IIIC.

For air recirculation:
The exhaust outlet in the plinth should be as large as possible to minimise draughts.
The location of the exhaust outlet in the plinth is consumer-defined. Minimum cross-section 720 cm².
To avoid smoke when frying/grilling refer to the manuals of VR/VP.

For air extraction:
For maximum duct lengths use Gaggenau flat rectangular ducts AD 8... or Naber-System Compair flow. Other flat ducts are not permitted!
Duct connection front or backwards: 2 ducts DN 150 cylindrical or flat rectangular duct. Downwards 2 ducts DN 150 flat rectangular duct (installation accessory).
When installing a ventilation hood with air extraction mode and a chimney-vented fireplace, the hood's power supply line needs a suitable safety switch.

Connection
Connecting cable 1.7 m with plug.

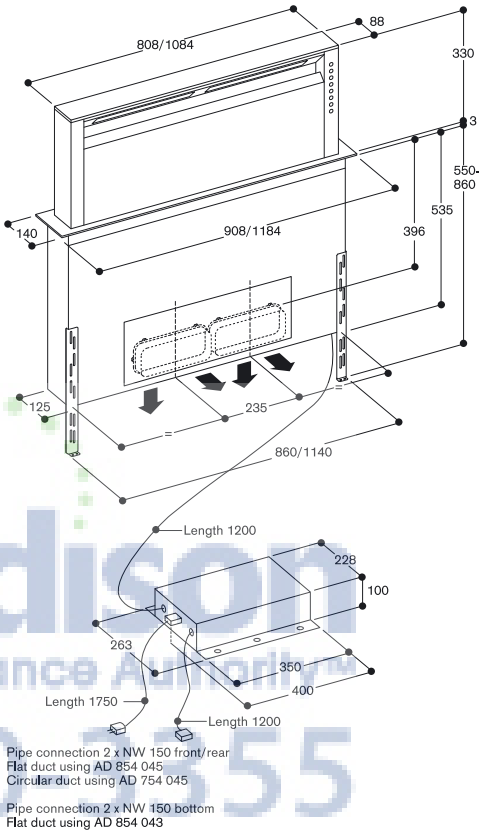

AL 400 connection positions NW 150

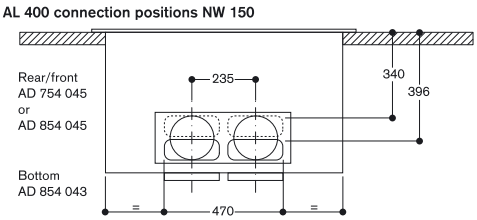

AA 010 410 air exhaust grille

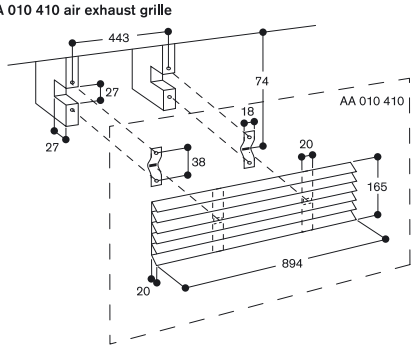

AJMadison
Your Appliance Authority
800-570-3355

AD 754/854 045 and AD 854 043

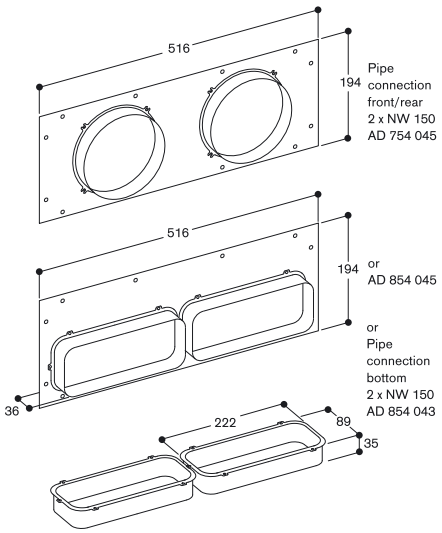

Depth measurements - base unit without back panel - recirculation for maximum power with 2x NW 150

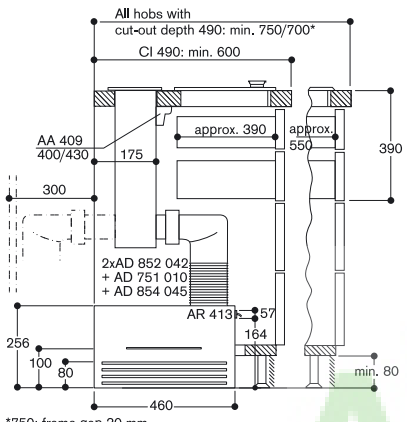

*750: frame gap 30 mm
*700: frame gap 0 mm (only with CI/CE 491 112)

Depth measurements - base unit without back panel - exhaust air mode for maximum power with 2x NW 150

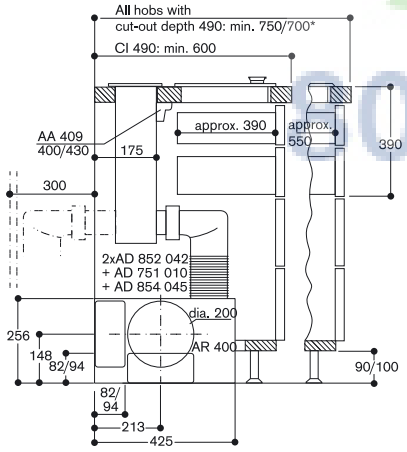

*750: frame gap 30 mm
*700: frame gap 0 mm (only with CI/CE 491 112)

Depth measurements - base unit without back panel - exhaust air mode with floor feed 2x NW 150 round

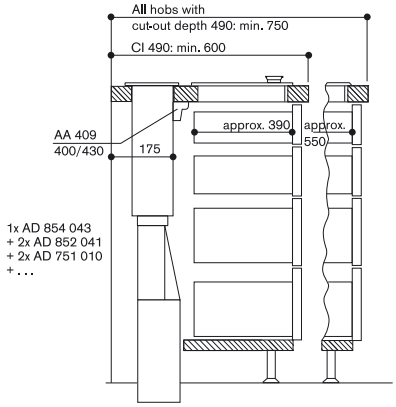

AA 409 400/430 unit support

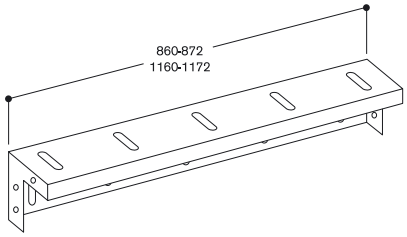

Exhaust air: AL 400 with AR 400 in the base unit

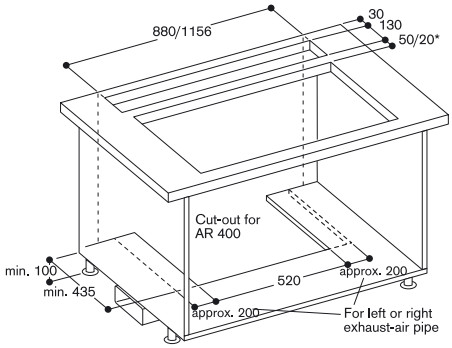

*50: frame gap 30 mm
*20: frame gap 0 mm
(only with CI/CE 491 112)

Circulated air: AL 400 with AR 413 in the base unit

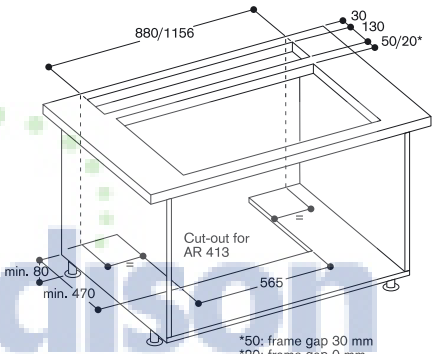

*50: frame gap 30 mm
*20: frame gap 0 mm
(only with CI/CE 491 112)

AL 400 installed flush

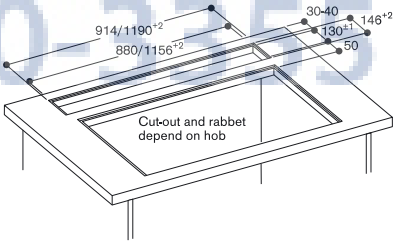

Longitudinal section

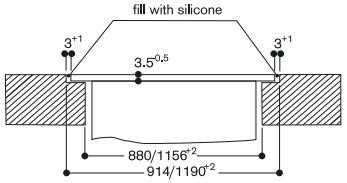

Cross-section

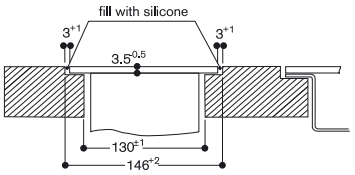

AL 400 cut-out is flush

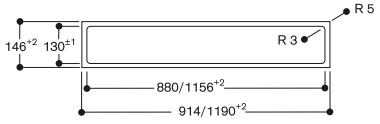

AjMadison
Your Appliance Authority
800-570-3355

Cut-out dimensions for appliance combinations in the 400 series. Surface installation.

The drawings listed below show the cut-out dimensions for appliance combinations in the 400 series for a surface installation. While taking into consideration the previous page and the drawings specified below, the installer can define the suitable cut-out dimensions. The combinations listed here are only sample combinations.

Depending on the installation situation (with or without cover/adjustment strip), the following connection strips must be provided:
VA 420 010 for a surface installation **without** appliance cover/adjustment strip.
VA 420 011 for a surface installation **with** appliance cover/adjustment strip.

If installing with the VA 440 appliance cover or VA 450 adjustment strip, take into account the additional space required for the depth.

Sample combinations without VL 414 ventilation element:

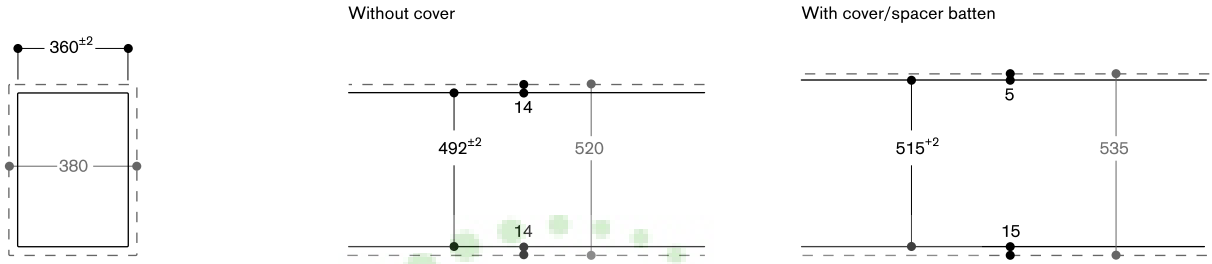

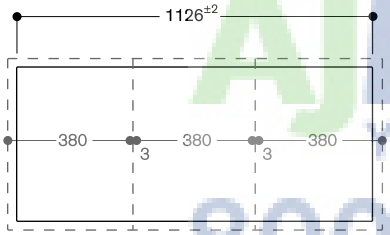

380	Appliance
3	Connection strip
380	Appliance
3	Connection strip
380	Appliance
1146	
-20	Overhang
1126±2	Cut-out

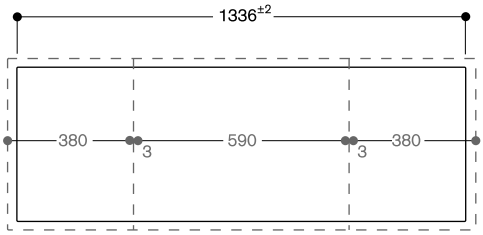

380	Appliance
3	Connection strip
590	Appliance
3	Connection strip
380	Appliance
1356	
-20	Overhang
1336±2	Cut-out

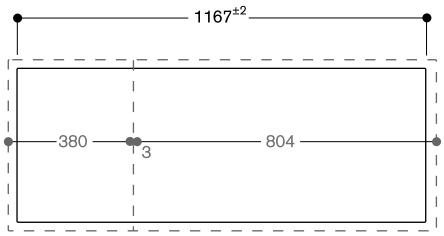

380	Appliance
3	Connection strip
804	Appliance
1187	
-20	Overhang
1167±2	Cut-out

All measurements in mm.

AjMadison
Your Appliance Authority
800-570-3355

Sample combinations with VL 414 ventilation element:

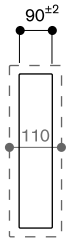

Without cover

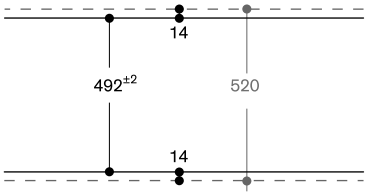

With cover/spacer batten

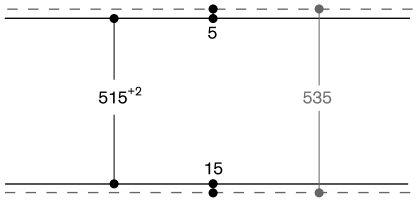

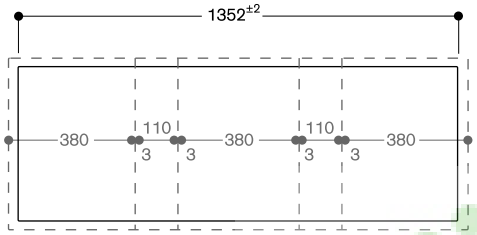

380	Appliance
3	Connection strip
110	VL
3	Connection strip
380	Appliance
3	Connection strip
110	VL
3	Connection strip
380	Appliance
1372	
-20	Overhang
1352±2	Cut-out

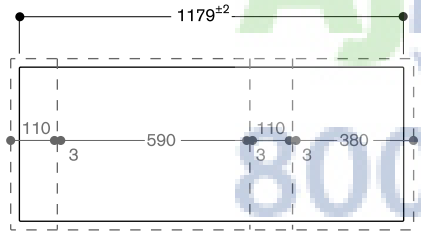

110	VL
3	Connection strip
590	Appliance
3	Connection strip
110	VL
3	Connection strip
380	Appliance
1199	
-20	Overhang
1179±2	Cut-out

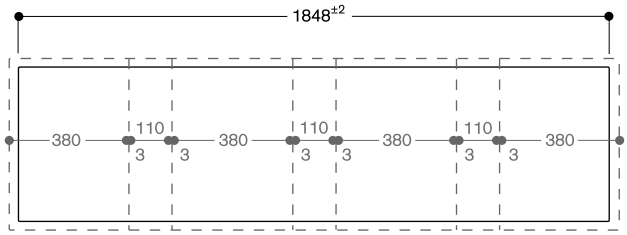

380	Appliance
3	Connection strip
110	VL
3	Connection strip
380	Appliance
3	Connection strip
110	VL
3	Connection strip
380	Appliance
3	Connection strip
110	VL
3	Connection strip
380	Appliance
1868	
-20	Overhang
1848±2	Cut-out

AjMadison
Your Appliance Authority™
800-570-3335

All measurements in mm.

Cut-out dimensions for appliance combinations in the 400 series. Flush installation.

The drawings listed below show the cut-out dimensions for appliance combinations in the 400 series for a flush installation. While taking into consideration the previous page and the drawings specified below, the installer can define the suitable cut-out dimensions. The combinations listed here are only sample combinations.

Depending on the installation situation (with or without cover/adjustment strip), the following connection strips must be provided:
VA 420 000 for a flush installation **without** appliance cover/adjustment strip.
VA 420 001 for a flush installation **with** appliance cover/adjustment strip.

If installing with the VA 440 appliance cover or VA 450 adjustment strip, take into account the additional space required for the depth. Furthermore, you must ensure that there is an asymmetrical alignment in the cut-out depth.

Sample combinations without VL 414 ventilation element:

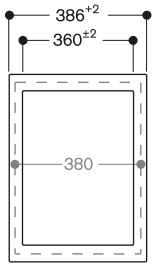

Without cover

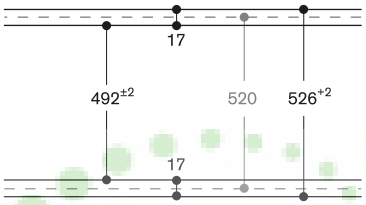

With cover/spacer batten

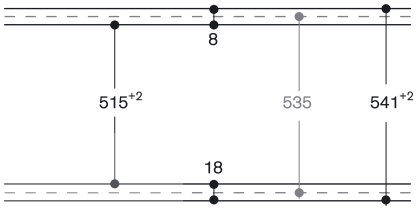

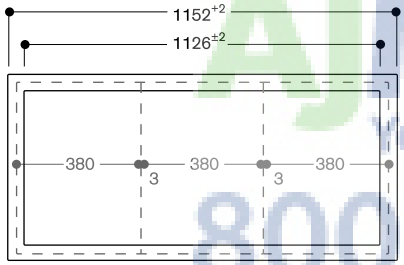

380	Appliance
3	Connection strip
380	Appliance
3	Connection strip
380	Appliance
1146	
-20	Overhang
$1126^{\pm2}$	Cut-out
+20	Overhang
+6	Silicone joint
1152^{+2}	Cut-out with groove

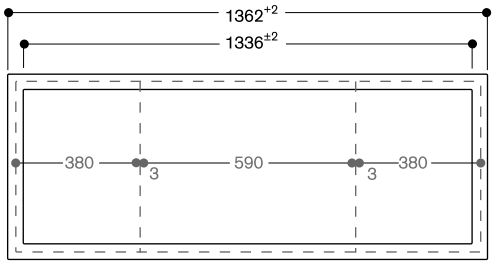

380	Appliance
3	Connection strip
590	Appliance
3	Connection strip
380	Appliance
1356	
-20	Overhang
$1336^{\pm2}$	Cut-out
+20	Overhang
+6	Silicone joint
1362^{+2}	Cut-out with groove

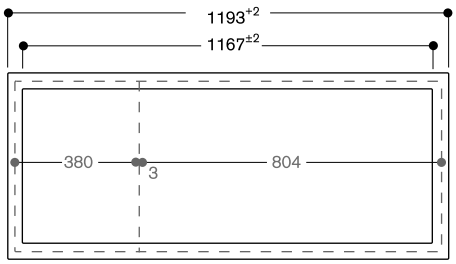

380	Appliance
3	Connection strip
804	Appliance
1187	
-20	Overhang
$1167^{\pm2}$	Cut-out
+20	Overhang
+6	Silicone joint
1193^{+2}	Cut-out with groove

All measurements in mm.

AjMadison
Your Appliance Authority
800-570-3353

Sample combinations with VL 414 ventilation element:

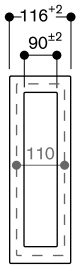

Without cover

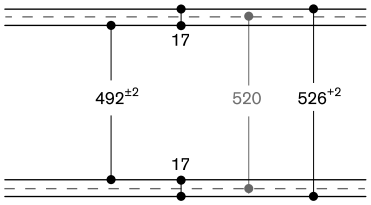

With cover/spacer batten

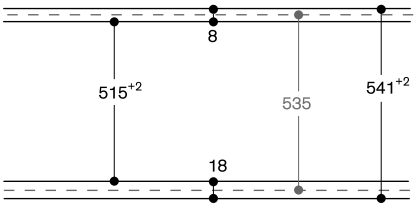

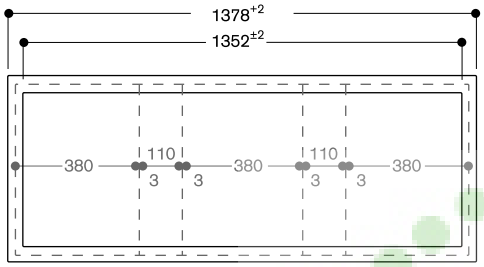

380	Appliance
3	Connection strip
110	VL
3	Connection strip
380	Appliance
3	Connection strip
110	VL
3	Connection strip
380	Appliance
1372	
-20	Overhang
1352±2	Cut-out
+20	Overhang
+6	Silicone joint
1378+2	Cut-out with groove

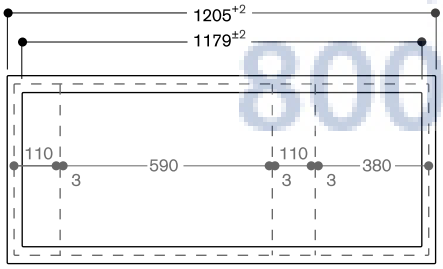

110	VL
3	Connection strip
590	Appliance
3	Connection strip
110	VL
3	Connection strip
380	Appliance
1199	
-20	Overhang
1179±2	Cut-out
+20	Overhang
+6	Silicone joint
1205+2	Cut-out with groove

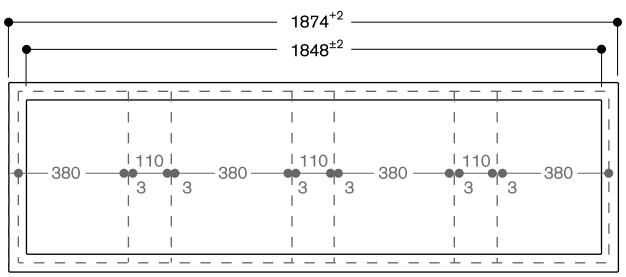

380	Appliance
3	Connection strip
110	VL
3	Connection strip
380	Appliance
3	Connection strip
110	VL
3	Connection strip
380	Appliance
3	Connection strip
110	VL
3	Connection strip
380	Appliance
1868	
-20	Overhang
1848±2	Cut-out
+20	Overhang
+6	Silicone joint
1874+2	Cut-out with groove

All measurements in mm.

AjMadison
Your Appliance Authority™
800-570-3355

Calculation of the width of the cut-out for a surface installation

Example using a combination of VI 414, VI 424, VP 414 and 2 VL 414.

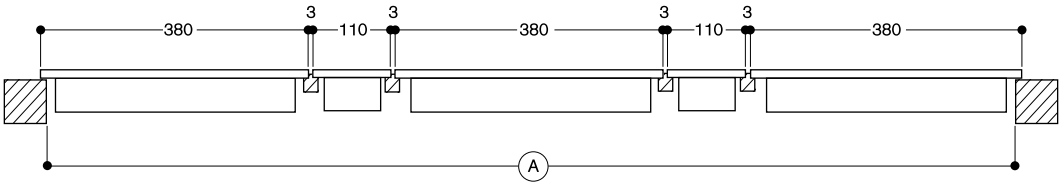

		Example		Your combination
Total width of all appliances	in mm	(3x 380) + (2x 110)	1,360	.....
+ Number of connection strips	x 3 mm	4 x 3	+ 12	.....
– Lateral appliance projection	(10 mm / side)	20	– 20	– 20
(A) Total width of the cut-out	(in mm)		1,352 +/– 2	..... +/– 2

Cut-out depth based on the installation situation with or without appliance cover/adjustment strip.

AjMadison
Your Appliance Authority™
800-570-3355

Calculation of the width of the cut-out for a flush installation

Example using a combination of VI 414, VI 424, VP 414 and 2 VL 414.

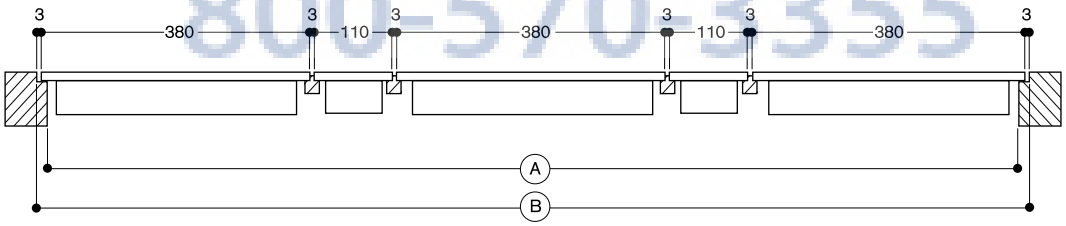

		Example		Your combination
Total width of all appliances	in mm	(3x 380) + (2x 110)	1,360	.....
+ Number of connection strips	x 3 mm	4 x 3	+ 12	.....
– Lateral appliance projection	(10 mm / side)	20	– 20	– 20
(A) Total width of the cut-out	(in mm)		1,352 +/– 2	..... +/– 2
+ Lateral appliance projection	(10 mm / side)	20	+ 20	+ 20
+ Silicone joint (3 mm circumference)		2 x 3	+ 6	+ 6
(B) Total width with groove	(in mm)		1,378 + 2	..... 0/+ 2

Cut-out depth based on the installation situation with or without appliance cover/adjustment strip.

All appliances with a width of 38 cm can be equipped with a stainless steel appliance cover.
If combining several appliances with at least one appliance cover, the VA 450 adjustment strip is required to compensate for the depth of the appliance without the appliance cover and to have a continuous cut-out.

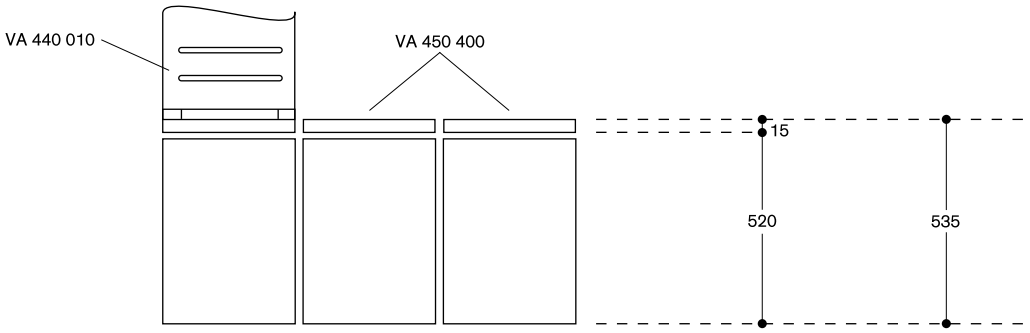

When installing with appliance cover or adjustment strip, depending on the installation situation (surface or flush), the following connecting strips must be provided:
VA 420 011 for a **surface installation** with appliance cover/adjustment strip.
VA 420 001 for a **flush installation** with appliance cover/adjustment strip.

If installing with the VA 440 appliance cover or VA 450 adjustment strip, take into account the additional space required for the depth. Furthermore, you must ensure that there is an asymmetrical alignment in the cut-out depth.

AjMadison
Your Appliance Authority™
800-570-3355

Installation with appliance cover/spacer batten; installation standing proud of surrounding surfaces

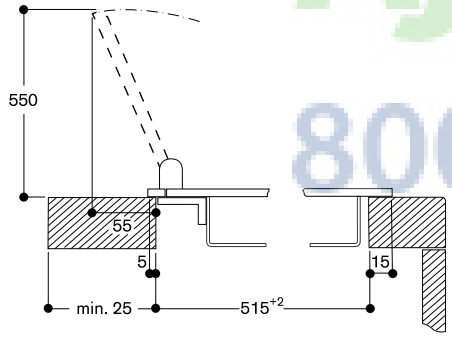

Installation with appliance cover/spacer batten; installation flush with surrounding surfaces

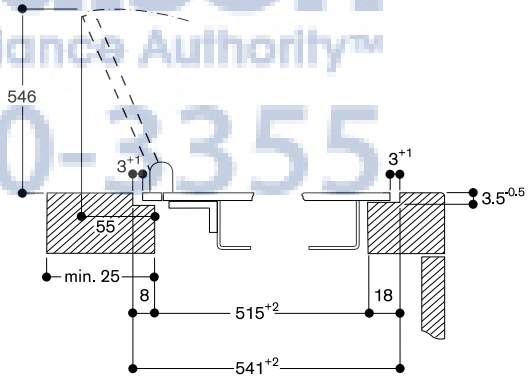

Optimal arrangement of the ventilation elements for the VL 414

When installing several VL 414 ventilation elements, the air output can be distributed flexibly to the cooking appliances using manual opening and closing.
The maximum appliance width of a single hob between two ventilation elements is 60 cm.

Location of the AA 490 control knob

The AA 490 control knob can be located in front of any ventilation element.
When installing with a VI 460, the control knobs for both appliances can be connected together. The minimum distance of 130 mm between the knob spindles of VI and AA must be observed.

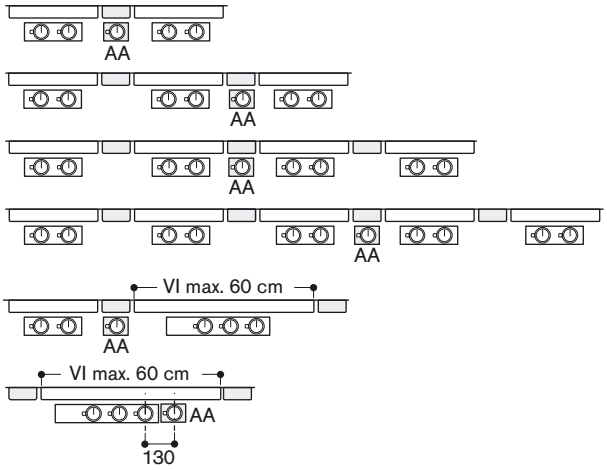

AjMadison
Your Appliance Authority™
800-570-3355

VL 414: Configuration for flexible power distribution

The power levels are controlled using the AA 490 control knob.
The remote fan unit is activated if at least one ventilation element is manually opened.
A maximum of four VL 414 ventilation elements can be connected to a control knob.

Possible combinations with a control knob:
4 VL 414: AR 400 140
3 VL 414: AR 400 140
2 VL 414: AR 400/401 140/131; AR 413
1 VL 414: all AR possible

If a higher power requirement means that a second remote fan unit is required, a second control knob must be provided for this.

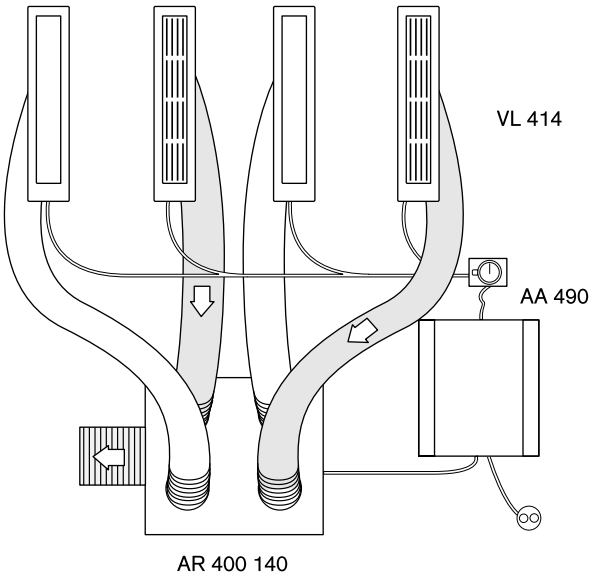

AjMadison
Your Appliance Authority™
800-570-3355

VI 270 114
Stainless steel control panel
Width 70 cm

VI 270 134
Aluminium control panel
Width 70 cm

Installation accessories

VV 200 014
Stainless steel connection strip for combination with further Vario cooktops

VV 200 034
Aluminium connection strip for combination with further Vario cooktops

Vario induction cooktop 200 series
VI 270

- Can be combined with the cooktops of the Vario 200 series to a harmonic unity
- Generous control panel for comfortable and secure operation

Cooking zones
1 induction cooking zone ø 21 cm (2,200 W, with booster 3,300 W).
2 induction cooking zones ø 18 cm (1,800 W, with booster 2,500 W).
1 induction cooking zone ø 15 cm (1,400 W, with booster 1,800 W).

Handling
Control knobs with cooking zone and output level markings.
Electronic control in 9 output levels.

Features
Cooking zone marking.
Pot detection.
Booster function for all cooking zones (two cooking zones - left and right - can be operated simultaneously with booster function).

Safety
Residual heat indication.
Operation indicator.
Safety shut-off.

Planning notes
Operates with magnetic (induction) iron pots and pans only. For an optimal heat distribution, the use of sandwich bottom cookware is recommended.
Immersion depth 49 mm.
Cooktop clamping range: 20 – 40 mm.
Intermediate shelf is recommended.
Appliance must be fixed from underneath.
Appliance weight: approx. 15 kg.

Connection
Total connected load 7.2 kW.
Connecting cable 1.5 m without plug.

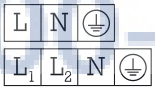

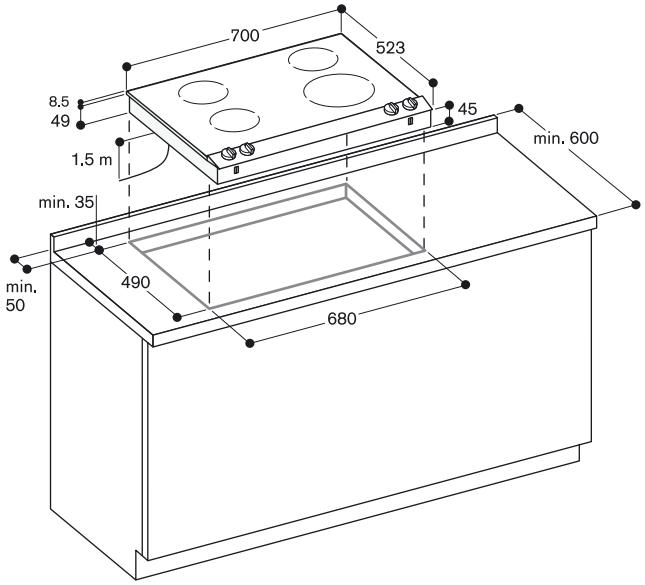

VI 260 114
Stainless steel control panel
Width 60 cm

VI 260 134
Aluminium control panel
Width 60 cm

Installation accessories

VV 200 014
Stainless steel connection strip for combination with further Vario cooktops

VV 200 034
Aluminium connection strip for combination with further Vario cooktops

Vario induction cooktop 200 series
VI 260

- Can be combined with the cooktops of the Vario 200 series to a harmonic unity
- Generous control panel for comfortable and secure operation

Cooking zones
1 induction cooking zone ø 21 cm (2,200 W, with booster 3,300 W).
2 induction cooking zones ø 18 cm (1,800 W, with booster 2,500 W).
1 induction cooking zone ø 15 cm (1,400 W, with booster 1,800 W).

Handling
Control knobs with cooking zone and output level markings.
Electronic control in 9 output levels.

Features
Cooking zone marking.
Pot detection.
Booster function for all cooking zones (two cooking zones - left and right - can be operated simultaneously with booster function).

Safety
Residual heat indication.
Operation indicator.
Safety shut-off.

Planning notes
Operates with magnetic (induction) iron pots and pans only. For an optimal heat distribution, the use of sandwich bottom cookware is recommended.
Immersion depth 49 mm.
Cooktop clamping range: 20 – 40 mm.
Intermediate shelf is recommended.
Appliance must be fixed from underneath.
Appliance weight: approx. 13 kg.

Connection
Total connected load 7.2 kW.
Connecting cable 1.5 m without plug.

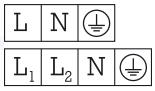

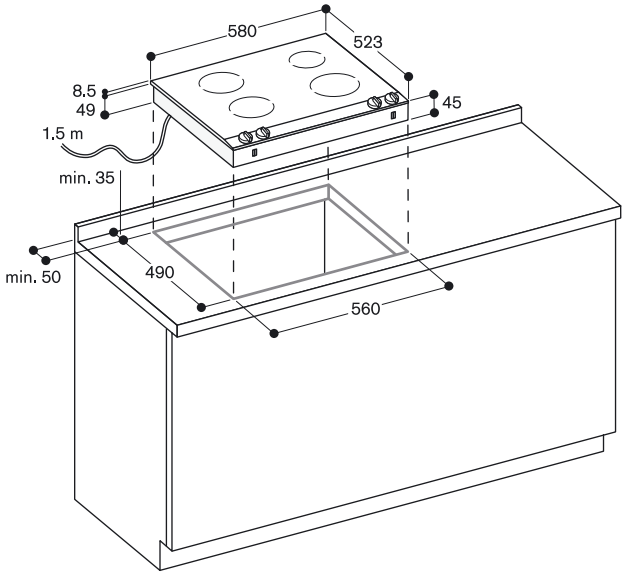

AJMadison
Your Appliance Authority™
800-570-3355

Vario gas cooktop 200 series
VG 264

- Can be combined with the cooktops of the Vario 200 series to a harmonic unity
- Generous control panel for comfortable and secure operation
- Solid smooth-surface cast pan supports for easy and safe positioning of cookware
- 9.4 KW on 4 burners

VG 264 114F
Stainless steel control panel
Width 60 cm
Liquid gas 28 – 37 mbar

VG 264 214
Stainless steel control panel
Width 60 cm
Natural gas 20 mbar

VG 264 134F
Aluminium control panel
Width 60 cm
Liquid gas 28 – 37 mbar

VG 264 234
Aluminium control panel
Width 60 cm
Natural gas 20 mbar

Installation accessories

SH 260 000
Hinge holder for fitting the appliance cover

VV 200 014
Stainless steel connection strip for combination with further Vario cooktops

VV 200 034
Aluminium connection strip for combination with further Vario cooktops

Special accessories

VD 201 014
Brushed stainless steel appliance cover (order two covers)

VD 201 034
Shot-blasted aluminium appliance cover (order two covers)

Cooking zones
2 high output burners (560 – 2,800 W), suitable for pots up to max. ø 22 cm.
2 standard burners (380 – 1,900 W), suitable for pots up to max. ø 22 cm.

Handling
Control knobs with cooking zone and output level markings.
One-handed operation.
Electric ignition.
Gas valve with fine control.

Features
Two-part cast pan support with continuous pot surface.
Enamelled burner cover.

Safety
Thermoelectric safety pilot.

Planning notes
Special nozzles can be ordered as spare parts.
Air intake from above.
No intermediate shelf required.
Appliance can be snapped into the worktop from above.
Securing rail on the rear and the front.
A minimum lateral clearance of at least 150 mm from adjacent heat-sensitive furniture or contact surfaces must be observed or thermal insulation fitted.
With a total connected load of more than 12 kW local regulations concerning room ventilation, room size and combination of extraction or recirculation hoods must be observed.
Minimum clearance between gas cooktop(s) with more than 12 kW and ventilation hood 70 cm.

Special nozzles (order 2 of each):
Part No. 433603 Natural gas 20 mbar
Part No. 419831 Liquid gas 30 mbar
Part No. 419830 Liquid gas 50 mbar

Connection
Total connected load gas 9.4 kW.
Total connected load electric 1.0 W.
Connecting cable 1.4 m with plug.

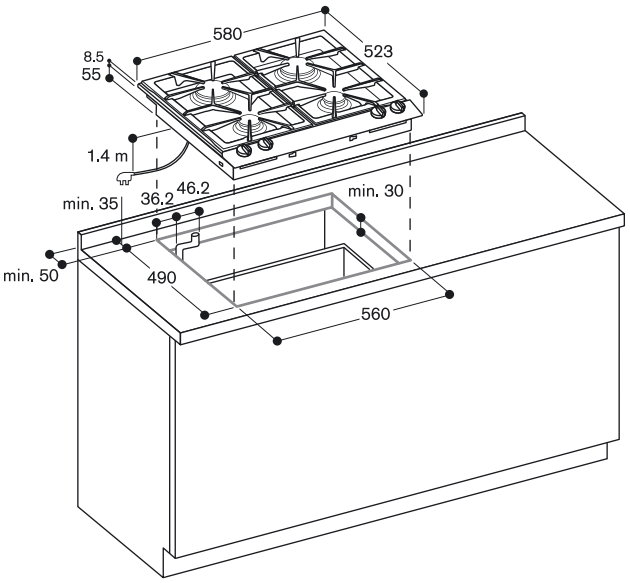

Gas connection

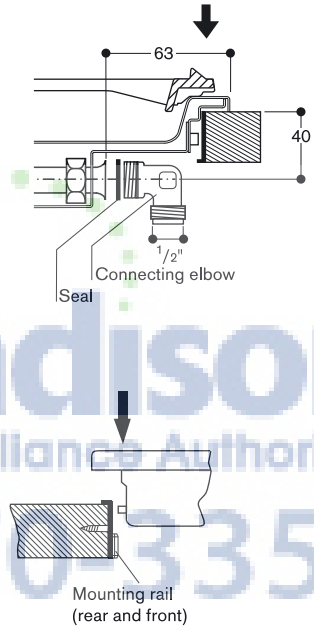

Madison
Appliance Authority™
800-570-3355

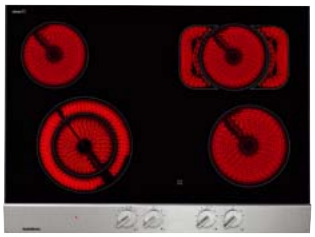

VE 270 114
Stainless steel control panel
Width 70 cm

Included in the price
1 glass scraper

Installation accessories
VV 200 014
Stainless steel connection strip for combination with further Vario cooktops

Vario glass ceramic cooktop 200 series
VE 270

- Can be combined with the cooktops of the Vario 200 series to a harmonic unity
- Generous control panel for comfortable and secure operation

Cooking zones
1 Super-Quick cooking zone ø 14.5 cm (1,100 W), converts to 14.5 x 24 cm (2,000 W) roasting zone.
1 Super-Quick cooking zone ø 14.5 cm (1,000 W), converts to ø 21 cm (2,200 W) cooking zone.
1 Super-Quick cooking zone ø 18 cm (1,800 W).
1 Super-Quick cooking zone ø 14.5 cm (1,200 W).

Handling
Continuously variable energy controls.

Features
Cooking zone marking.

Safety
Individual residual heat indicators.
Operation indicator.

Planning notes
Immersion depth 58 mm.
Under the appliance, a 60 mm clearance must be observed from side panels or intermediate shelf must be planned.
Appliance can be snapped into the worktop from above.
Securing rail on the rear and the front.
Appliance weight: approx. 13 kg.

Connection
Total connected load 7.2 kW.
Plan a connection cable.

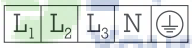

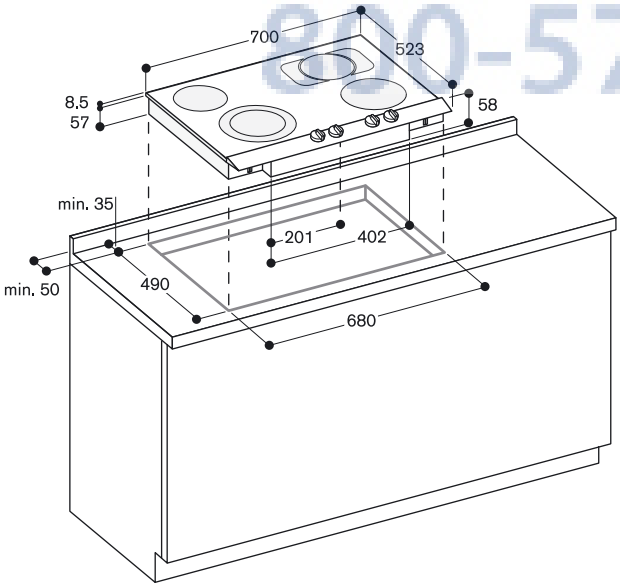

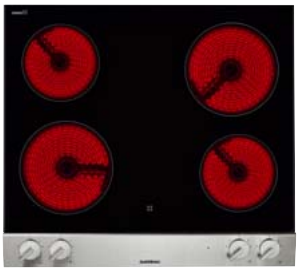

VE 260 114
Stainless steel control panel
Width 60 cm
VE 260 134
Aluminium control panel
Width 60 cm

Included in the price
1 glass scraper

Installation accessories
VV 200 014
Stainless steel connection strip for combination with further Vario cooktops
VV 200 034
Aluminium connection strip for combination with further Vario cooktops

Vario glass ceramic cooktop 200 series
VE 260

- Can be combined with the cooktops of the Vario 200 series to a harmonic unity
- Generous control panel for comfortable and secure operation

Cooking zones
2 Super-Quick cooking zones ø 18 cm (1,800 W).
2 Super-Quick cooking zones ø 14.5 cm (1,200 W).

Handling
Continuously variable energy controls.

Features
Cooking zone marking.

Safety
Individual residual heat indicators.
Operation indicator.

Planning notes
Immersion depth 58 mm.
Under the appliance, a 60 mm clearance must be observed from side panels or intermediate shelf must be planned.
Installation in a 60 cm wide bottom cabinet is possible.
Appliance can be snapped into the worktop from above.
Securing rail on the rear and the front.
Appliance weight: approx. 10 kg.

Connection
Total connected load 6.0 kW.
Plan a connection cable.

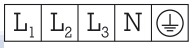

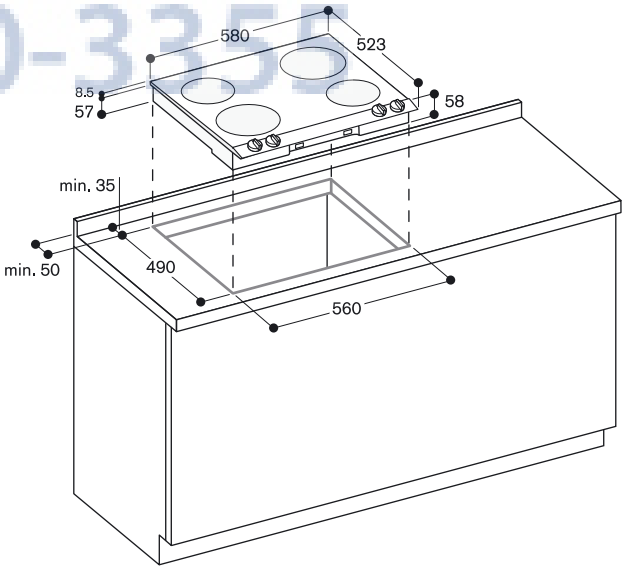

AMadison
Your Appliance Authority™
800-570-3358

VI 230 114
Stainless steel control panel
Width 28 cm

VI 230 134
Aluminium control panel
Width 28 cm

Installation accessories

SH 230 001
Hinge holder for fitting the appliance cover

VV 200 014
Stainless steel connection strip for combination with further Vario cooktops

VV 200 034
Aluminium connection strip for combination with further Vario cooktops

Special accessories

VD 201 014
Brushed stainless steel appliance cover

VD 201 034
Shot-blasted aluminium appliance cover

Vario induction cooktop 200 series
VI 230

- Can be combined with the cooktops of the Vario 200 series to a harmonic unity
- Generous control panel for comfortable and secure operation

Cooking zones
1 induction cooking zone ø 21 cm (2,200 W, with booster 3,300 W).
1 induction cooking zone ø 15 cm (1,400 W, with booster 1,800 W).

Handling
Control knobs with cooking zone and output level markings.
Electronic power control in 9 output levels.

Features
Cooking zone marking.
Pot detection.
Booster function for both cooking zones.

Safety
Residual heat indication.
Operation indicator.
Safety shut-off.

Planning notes
Operates with magnetic (induction) iron pots and pans only. For an optimal heat distribution, the use of sandwich bottom cookware is recommended.
Immersion depth 50 mm.
The wok pan WP 400 001 cannot be used with this appliance.
Appliance must be fixed from underneath.
Cooktop clamping range: 20 – 40 mm.
Appliance weight: approx. 7 kg.

Connection
Total connected load 3.6 kW.
Connecting cable 1.5 m without plug.

L N ⏚

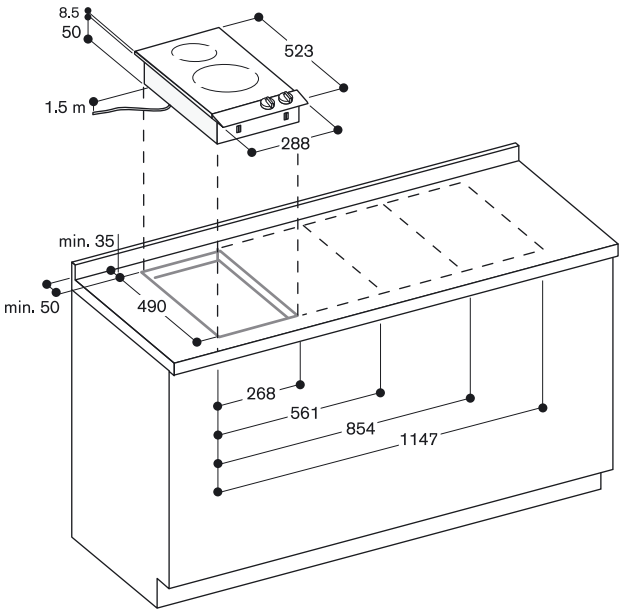

AMadison
Your Appliance Authority™
800-570-3355

Vario gas wok 200 series
VG 231

- Can be combined with the cooktops of the Vario 200 series to a harmonic unity
- Generous control panel for comfortable and secure operation
- Three-ring burner of solid, heat-resistant brass as used in professional kitchen
- Total output up to 6 KW

VG 231 114F
Stainless steel control panel
Width 28 cm
Liquid gas 28 – 37 mbar
Wok burner with 5 KW

VG 231 214
Stainless steel control panel
Width 28 cm
Natural gas 20 mbar
Wok burner with 6 KW

VG 231 134F
Aluminium control panel
Width 28 cm
Liquid gas 28 – 37 mbar
Wok burner with 5 KW

VG 231 234
Aluminium control panel
Width 28 cm
Natural gas 20 mbar
Wok burner with 6 KW

Installation accessories

VV 200 014
Stainless steel connection strip for combination with further Vario cooktops

VV 200 034
Aluminium connection strip for combination with further Vario cooktops

Special accessories

VD 201 014
Brushed stainless steel appliance cover

VD 201 034
Shot-blasted aluminium appliance cover

WP 400 001
Wok pan made of multiple-layer material
With round bottom and handle, ø 36 cm, 6 litres, height 10 cm.

Cooking zones
VG 231 114F
1 three-ring wok burner
(250 W – 5,000 W), suitable for pots up to max. ø 32 cm.

VG 231 214
1 three-ring wok burner
(250 W – 6,000 W), suitable for pots up to max. ø 32 cm.

VG 231 134F
1 three-ring wok burner
(250 W – 5,000 W), suitable for pots up to max. ø 32 cm.

VG 231 234
1 three-ring wok burner
(250 W – 6,000 W), suitable for pots up to max. ø 32 cm.

Handling
One-handed operation.
Gas valve with fine control.
To close the cover, the pan support can be easily reversed.

Features
Cast pan support.
Brass burner rings.

Safety
Thermoelectric safety pilot.

Planning notes
Maximum drawer depth 42 cm.
Appliance can be snapped into the worktop from above.
A minimum clearance of at least 150 mm from adjacent heat-sensitive furniture or contact surfaces must be observed or thermal insulation fitted.
With a total connected load of more than 12 kW local regulations concerning room ventilation, room size and combination of extraction or recirculation hoods must be observed.
Minimum clearance between gas cooktop(s) with more than 12 kW and ventilation hood 70 cm.

Special nozzles (order 1 of each):
Part No. 622148 Natural gas 20 mbar
Part No. 622150 Liquid gas 50 mbar
Part No. 622151 Liquid gas 28-30/37 mbar
Appliance weight: approx. 10 kg.

Connection
Total connected load gas 5.0/6.0 kW.
Total connected load electric 1.0/1.0/ W.
Connecting cable 1.4 m with plug.

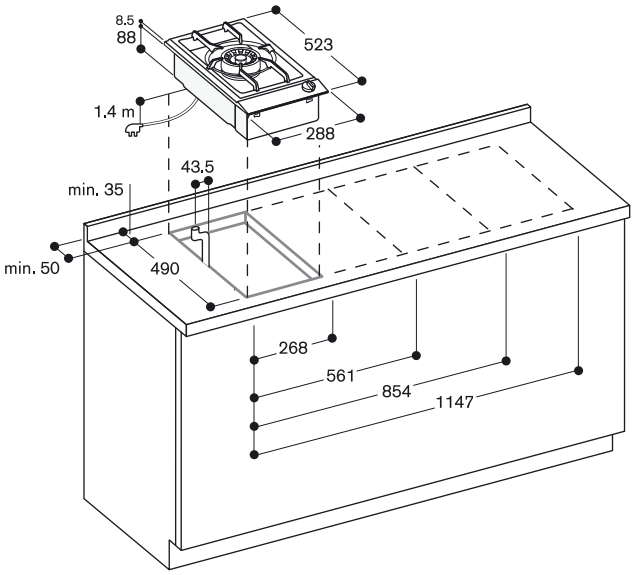

Gas connection

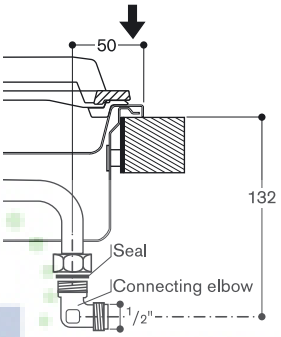

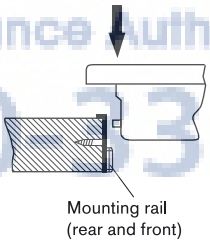

AJMadison
Your Appliance Authority™
800-570-2355

VG 232 114F
Stainless steel control panel
Width 28 cm
Liquid gas 28 – 37 mbar

VG 232 214
Stainless steel control panel
Width 28 cm
Natural gas 20 mbar

VG 232 134F
Aluminium control panel
Width 28 cm
Liquid gas 28 – 37 mbar

VG 232 234
Aluminium control panel
Width 28 cm
Natural gas 20 mbar

Installation accessories

VV 200 014
Stainless steel connection strip for combination with further Vario cooktops

VV 200 034
Aluminium connection strip for combination with further Vario cooktops

Special accessories

VD 201 014
Brushed stainless steel appliance cover

VD 201 034
Shot-blasted aluminium appliance cover

Vario gas cooktop 200 series
VG 232

- Can be combined with the cooktops of the Vario 200 series to a harmonic unity
- Generous control panel for comfortable and secure operation
- Solid smooth-surface cast pan supports for easy and safe positioning of cookware

Cooking zones
1 high output burner (560 – 2,800 W), suitable for pots up to max. ø 22 cm.
1 standard output burner (380 – 1,900 W), suitable for pots up to max. ø 22 cm.

Handling
One-handed operation.
Gas valve with fine control.

Features
Cast pan support with continuous pot surface.
Enamelled burner cover.

Safety
Thermoelectric safety pilot.

Planning notes
Maximum drawer depth 42 cm.
Appliance can be snapped into the worktop from above.
A minimum clearance of at least 150 mm from adjacent heat-sensitive furniture or contact surfaces must be observed or thermal insulation fitted.
With a total connected load of more than 12 kW local regulations concerning room ventilation, room size and combination of extraction or recirculation hoods must be observed.
Minimum clearance between gas cooktop(s) with more than 12 kW and ventilation hood 70 cm.

Special nozzles (order 1 of each):
Part No. 433603 Natural gas 20 mbar
Part No. 419831 Bottled gas 28-37 mbar
Part No. 419830 Bottled gas 50 mbar
Appliance weight: approx. 8 kg.

Connection
Total connected load gas 4.7 kW.
Total connected load electric 1.0 W.
Connecting cable 1.4 m with plug.

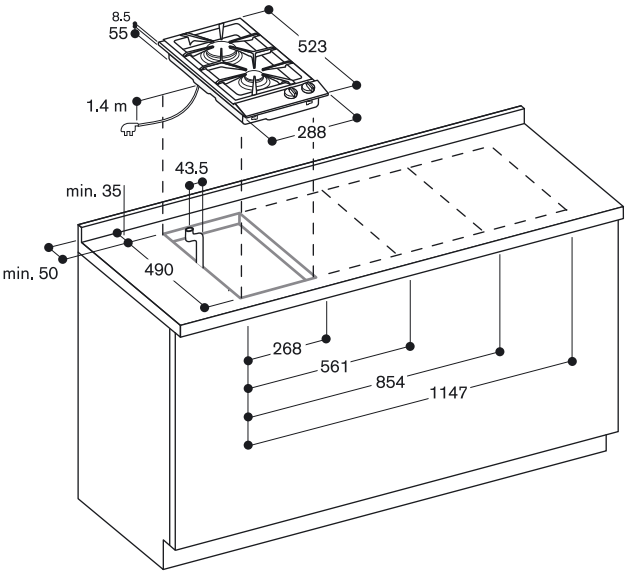

Gas connection

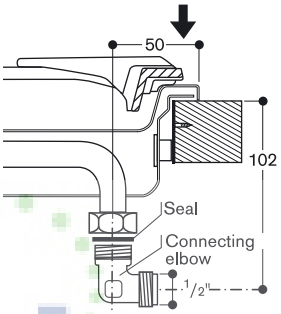

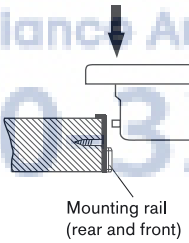

AJMadison
Your Appliance Authority™
800-570-3355

Vario glass ceramic cooktop 200 series
VE 230

- Can be combined with the cooktops of the Vario 200 series to a harmonic unity
- Generous control panel for comfortable and secure operation

VE 230 114
Stainless steel control panel
Width 28 cm

VE 230 134
Aluminium control panel
Width 28 cm

Included in the price
1 glass scraper

Installation accessories

SH 230 001
Hinge holder for fitting the appliance cover

VV 200 014
Stainless steel connection strip for combination with further Vario cooktops

VV 200 034
Aluminium connection strip for combination with further Vario cooktops

Special accessories

VD 201 014
Brushed stainless steel appliance cover

VD 201 034
Shot-blasted aluminium appliance cover

Cooking zones
1 Super-Quick cooking zone ø 14.5 cm (1,200 W).
1 Super-Quick cooking zone ø 12 cm (700 W), converts to ø 18 cm (1,800 W) cooking zone.

Handling
Continuously variable energy controls.

Features
Cooking zone marking.

Safety
Individual residual heat indicators.
Operation indicator.

Planning notes
Immersion depth 44 mm, depth at plug socket 65 mm.
Appliance can be snapped into the worktop from above.
Appliance weight: approx. 6 kg.

Connection
Total connected load 3.0 kW.
Connecting cable 1.7 m without plug.

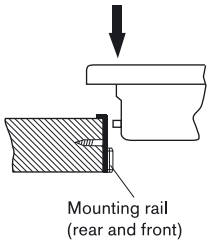

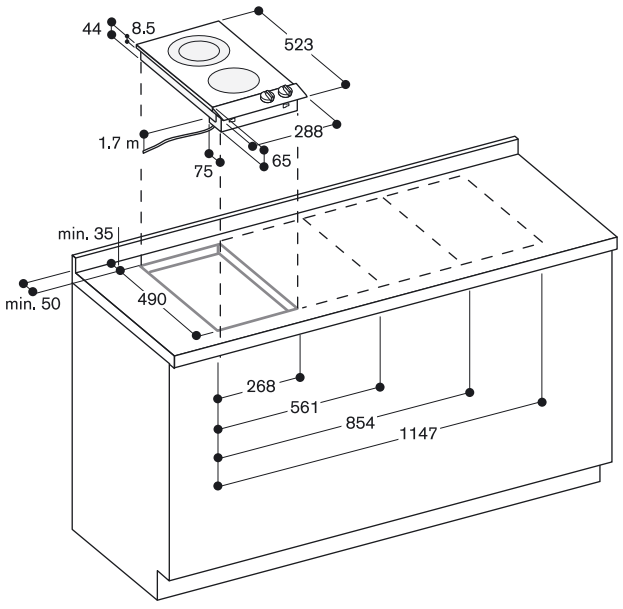

Vario Teppan Yaki 200 series
VP 230

- Can be combined with the cooktops of the Vario 200 series to a harmonic unity
- Generous control panel for comfortable and secure operation
- Cooking directly on the metal surface, without any pots or pans
- Exact temperature control up to 240 °C
- Keeping warm setting

VP 230 114
Stainless steel control panel
Width 28 cm

VP 230 134
Aluminium control panel
Width 28 cm

Included in the price
2 spatula

Installation accessories

SH 230 001
Hinge holder for fitting the appliance cover

VV 200 014
Stainless steel connection strip for combination with further Vario cooktops

VV 200 034
Aluminium connection strip for combination with further Vario cooktops

Special accessories

VD 201 014
Brushed stainless steel appliance cover

VD 201 034
Shot-blasted aluminium appliance cover

Cooking zones
Useable area: W 22.5 x D 39.5 cm.

Handling
Keeping warm setting.
Electronic temperature control from 120 °C to 240 °C.
Cleaning stage.

Features
Heating element with 1,800 W.
Stainless steel frame seamlessly welded with the stainless steel surface.

Safety
Pre-heat and residual heat indicator.
Operation indicator.

Planning notes
The distance from the upper edge of the work surface to the upper edge of the intermediate shelf must be at least 150 mm.
Appliance can be snapped into the worktop from above.
A minimum lateral clearance of at least 30 mm from adjacent heat-sensitive furniture or contact surfaces must be observed or thermal insulation fitted.
Intermediate shelf required; after installation, this shelf must only be removed using tools to guarantee the touch protection from below.
Appliance weight: approx. 10 kg.

Connection
Total connected load 1.8 kW.
Connecting cable 1.7 m without plug.

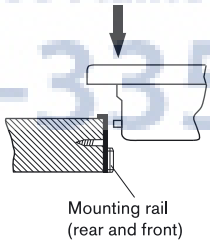

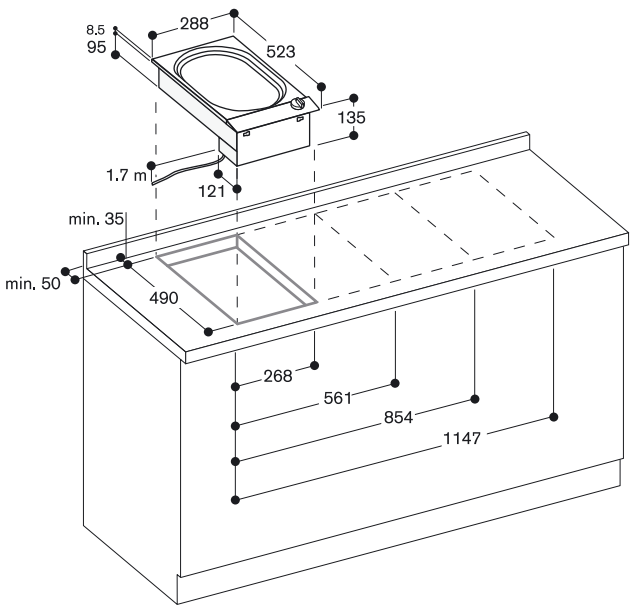

AjMadison
Your Appliance Authority™
800-570-3355

VR 230 114
Stainless steel control panel
Width 28 cm

VR 230 134
Aluminium control panel
Width 28 cm

Included in the price
1 lava stone
1 cleaning brush
1 cast grill
1 grease collecting insert
1 stainless steel appliance cover

Installation accessories
VV 200 014
Stainless steel connection strip for combination with further Vario cooktops

VV 200 034
Aluminium connection strip for combination with further Vario cooktops

Special accessories
AM 060 000
Cast roaster

LV 030 000
Lava stones for refilling

Vario electric grill 200 series
VR 230

- Can be combined with the cooktops of the Vario 200 series to a harmonic unity
- Generous control panel for comfortable and secure operation
- 2 zones, separately controlled
- Open cast grill, lava stones

Handling
9 switching levels.

Features
2 separately controllable swing-out grilling elements (1,500 W).
Cast grill.
Stainless steel lavastone container and grease collecting insert, dishwasher-safe.

Planning notes
Appliance can be snapped into the worktop from above.
A minimum clearance of at least 200 mm from adjacent heat-sensitive furniture or contact surfaces must be observed or thermal insulation fitted.
Appliance weight: approx. 15 kg.

Connection
Total connected load 3.0 kW.
Connecting cable 1.7 m without plug.

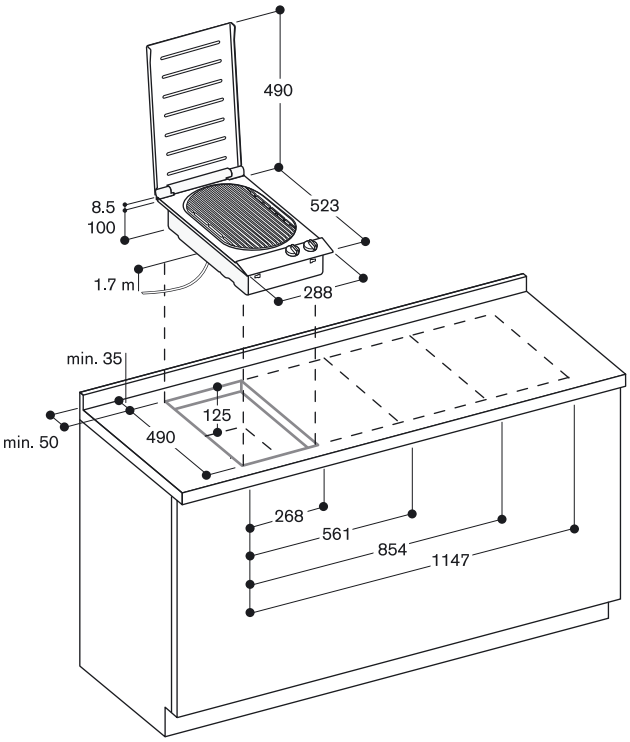

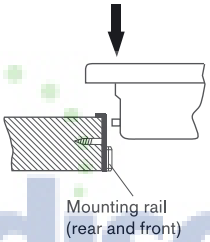

AjMadison
Your Appliance Authority™
800-570-3355

VK 230 114
Stainless steel control panel
Width 28 cm

VK 230 134
Aluminium control panel
Width 28 cm

Included in the price

2 cooking insert
1 glass cover
1 hand grip
1 residuary filter
1 water drain valve

Installation accessories

AG 050 000
Drain installation set with check valve drain set (DN 40) and connecting sleeve (½" on 1½")

AG 060 000
Drain installation set enables drainage of cooking liquid into a suitable receptacle

VV 200 014
Stainless steel connection strip for combination with further Vario cooktops

VV 200 034
Aluminium connection strip for combination with further Vario cooktops

Special accessories

FK 023 000
Pasta basket

GE 020 010
Unperforated cooking insert

GE 020 020
Perforated cooking insert

VD 201 014
Brushed stainless steel appliance cover

VD 201 034
Shot-blasted aluminium appliance cover

Vario steamer 200 series
VK 230

- Can be combined with the cooktops of the Vario 200 series to a harmonic unity
- Generous control panel for comfortable and secure operation
- Steaming in cooktop size
- Exact water temperature control from 45 °C to 95 °C
- Cooking on two levels, without flavour transfer

Cooking zones
Water capacity 1 to 6 litres.

Handling
Function display.
Electronic water temperature control from 45 °C to 95 °C, in 5 °C steps.
Steam cooking level with electronic steam control for pressureless cooking.

Features
Automatic boiling point detection.
Motor-driven water drain valve 1/2".
Electronic short-term timer up to 90 min.
Special heating system.

Safety
Remaining time display.
Child lock.
Operation indicator.
Automatic shut off.

Planning notes
Access to drain in bottom cabinet is required.
Appliance is intended for fixed water outlet connection, but can be fitted without fixed connection by using the special accessory AG 060.
Seal the worktop cutout.
Appliance can be snapped into the worktop from above.
A minimum clearance of at least 200 mm from adjacent heat-sensitive furniture or contact surfaces must be observed or thermal insulation fitted.
In case of suspended cabinets a ventilation hood must be installed above the steamer.
If a cover is fitted, the glass lid must be removed when closing it.
VK 230 and VF 230 must not be installed directly next to each other.
In combination with the downdraft ventilation VL 040/041, this must be planned on the left of VK.
Appliance weight: approx. 11 kg.

Connection
Total connected load 2.3 kW.
Connecting cable 1.7 m without plug.

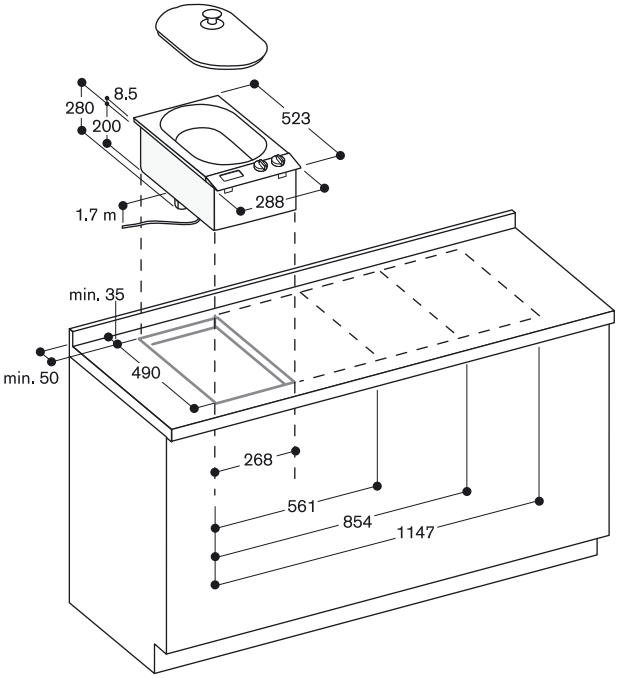

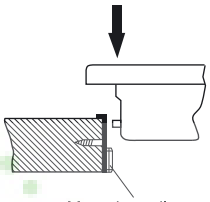

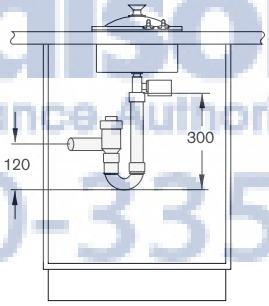

Drainage connection present in the bottom cupboard:
Fixed connection without free fall section as per DIN 1986, Part 1.
A non-return valve must be installed.
Recommendation: AG 050 000 Drain installation set.

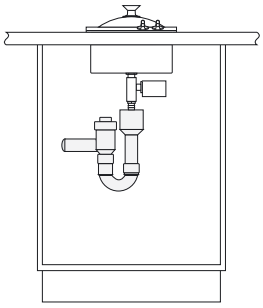

Drainage connection present in the bottom cupboard:
Fixed connection with free fall section as per DIN 1986 Part 1.
A non-return valve must be installed.
Recommendation:
Install a non-return valve.
Recommendation: AG 050 000 Drain installation set.

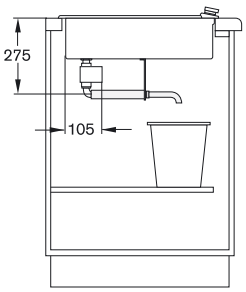

Drainage into a water-collecting receptacle (e.g. saucepan).
Only possible with AG 060 000 Drain installation set.

Andison
Your Appliance Authority™
800-870-3355

VF 230 114
Stainless steel control panel
Width 28 cm

Included in the price
1 stainless steel cover
1 deep frying basket

Installation accessories
VV 200 014
Stainless steel connection strip for combination with further Vario cooktops

Special accessories
VD 201 014
Brushed stainless steel appliance cover

Vario deep fryer 200 series
VF 230

- Can be combined with the cooktops of the Vario 200 series to a harmonic unity
- Generous control panel for comfortable and secure operation
- Three-zone basin, without flavour transfer
- Exact temperature control, no drop in output
- Integrated frying basket suspension

Cooking zones
Three-zone basin.
Oil capacity 3.5 litres.

Handling
Function display.
Electronic temperature control from 135 °C to 190 °C, in 5 °C steps.

Features
Gentle fat melting setting.
Foaming zone.
Frying zone.
Cold oil zone.
Swing-out heating element (2,300 W).
Electronic short-term timer up to 90 min.

Safety
Remaining time display.
Electronic overheating protection.
Child lock.
Safety shut-off.

Planning notes
Plan a door in the bottom cabinet for operation of the oil drain valve.
VF 230 and VK 230 must not be installed directly next to each other.
Appliance can be snapped into the worktop from above.
Appliance weight: approx. 10 kg.

Connection
Total connected load 2.3 kW.
Connecting cable 1.7 m without plug.

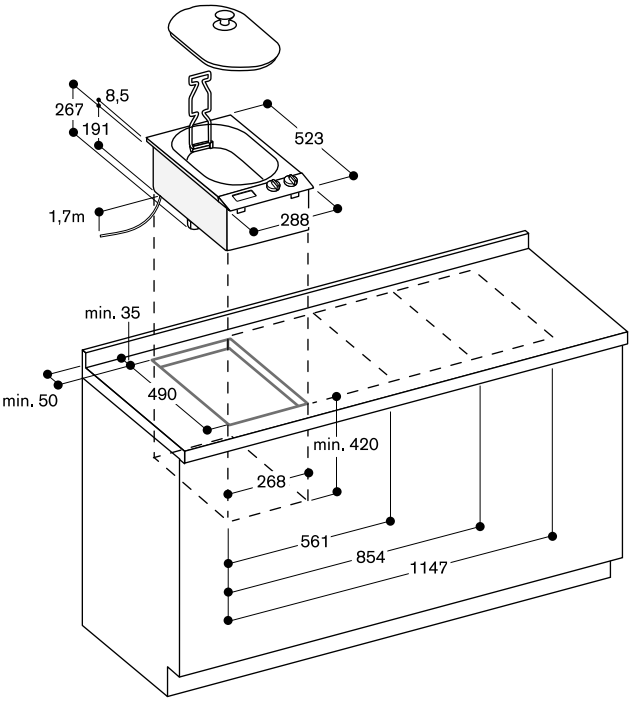

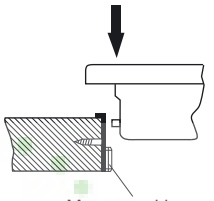

Montageschiene
(hinten und vorne)

Madison
Your Appliance Authority™
800-570-3355

VL 041 114
Stainless steel control panel
Control unit
Air extraction/recirculation with remote fan unit AR 400/401/403/413

VL 040 114
Stainless steel control panel
Expansion elementx
Air extraction/recirculation with remote fan unit AR 400/401/413

VL 041 134
Aluminium control panel
Control unit
Air extraction/recirculation with remote fan unit AR 400/401/403/413

VL 040 134
Aluminium control panel
Expansion elementx
Air extraction/recirculation with remote fan unit AR 400/401/413

Necessary installation accessories

AD 724 040
Connection piece for cylindrical duct DN 125

AD 824 042
Flat duct system with conducting fins
Connection piece VL 041/040 for DN 125 flat rectangular

AD 854 042
Flat duct system with conducting fins
Connection piece VL 041/040 for DN 150 flat rectangular

Installation accessories

AS 070 000
Connection piece for extension in the case of installation next to VK or VF

LS 041 000
Air baffle for VL 040/041 next to gas appliance

VV 200 014
Stainless steel connection strip for combination with further Vario cooktops

VV 200 034
Aluminium connection strip for combination with further Vario cooktops

Installation accessories for the air recirculation ducts you will find at the pages 236–239.

Vario downdraft ventilation 200 series
VL 040/VL 041

- Ventilation element integrated in the worktop
- Highly efficient ventilation system at the cooktop
- Compact ducting in connection with flat rectangular pipes AD 8..
- Minimal planning and easy installation for air recirculation

Output
Maximum air output in combination with remote fan units s. table remote fan units on page 252/253.
Sound power level depends on the built-in situation.

Features
Output control, knob operation.
4 output levels.
Ventilation grille can be washed.
Metal grease filter with grease collecting insert.
No duct connection piece included.

Planning notes
No additional switch necessary.
Air extraction operation in combination with remote fan units AR 400/401/403 or recirculation mode with AR 413.
Please refer to page 228–233 for recommended configurations of downdraft ventilations and remote fan units and the needed ducting elements.
Maximum cooktop width between two VL: 60 cm (exception: VI/VE 270).
If installed next to gas appliances, the air baffle LS 041 000 is recommended to ensure maximum performance of the cooktop. If installed next to gas appliances, flat ducts must not be used for the piping up to the fan unit.
When having installed the air baffle LS 041 000 the wok pan WP 400 001 can not be used.
When installing a ventilation hood with air extraction mode and a chimney-vented fireplace, the hood's power supply line needs a suitable safety switch.
Do not fit in drawer area.
For maximum duct lengths use Gaggenau flat rectangular ducts AD 8... or Naber-System Compair flow. Other flat ducts are not permitted!
Duct connection downwards or sidewards:
DN 125 cylindrical included.
Optional DN 125/150 flat rectangular duct with connection piece AD 824/854 042 (installation accessory).
Connection of 2 VL with ducting 2x DN 125 cylindrical or 2x DN 125/150 rectangular at remote fan AR 4.. .
For leading through the floor DN 150 cylindrical with connection of 2 DN 125 cylindrical use Y-joint AD 754 044.
Please ensure when installing the exhaust air ducting that no sharp bends are caused and that the cross-section of the ducting is not constricted in any way.
For downdraft configurations with maximum lengths of exhaust air ducts go to Rodun at www.gaggenau.com.
Appliance weight: approx. 4 kg.

Connection
Connecting cable 1.5 m with plug.

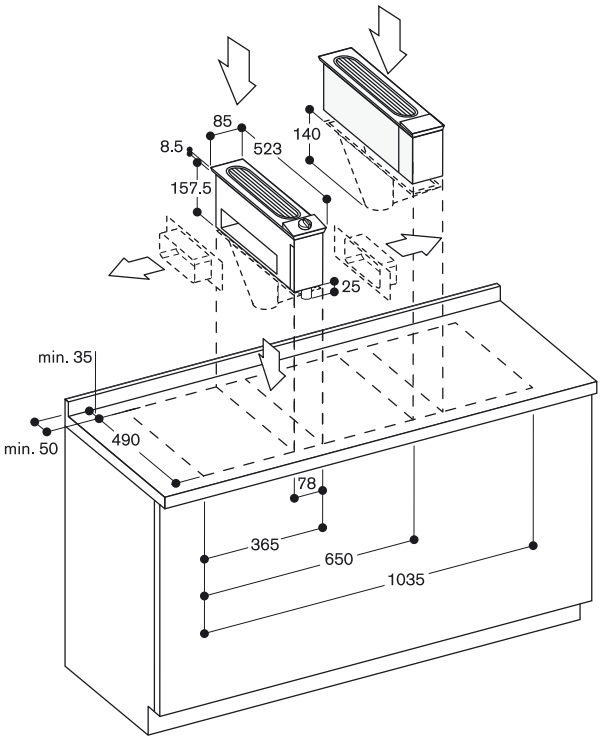

Flat duct pipe connection bottom/left/right
NW 150 using AD 854 042
NW 125 using AD 824 042

Circular duct pipe connection bottom/left/right
NW 125 using AD 724 040

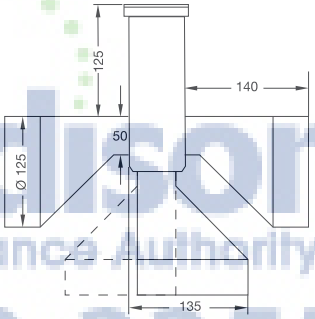

AD 854/824 042

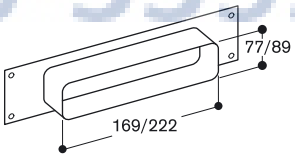

AS 070 000

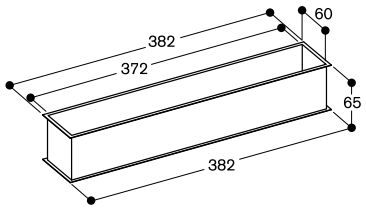

LS 041 000

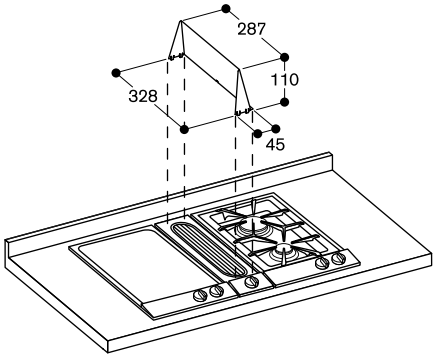

AJMadison
Your Appliance Authority™
800-570-3355

The drawings below show the cut-out dimensions for cooktop combinations of the 200 series.
The technician can find the suitable cut-out dimensions for the combinations most frequently used by referring to the previous pages and the drawings below.

Cut-out dimensions for the Vario 200 series

288 Appliances
– 20 Overhang
268 Cut-out

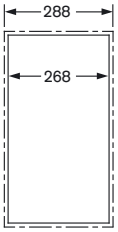

288 Appliances
5 VV 200
288 Appliances
581
– 20 Overhang
561 Cut-out

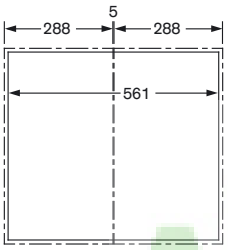

288 Appliances
5 VV 200
288 Appliances
5 VV 200
288 Appliances
874
– 20 Overhang
854 Cut-out

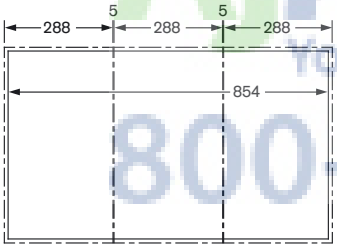

288 Appliances
5 VV 200
288 Appliances
5 VV 200
288 Appliances
5 VV 200
288 Appliances
1,167
– 20 Overhang
1,147 Cut-out

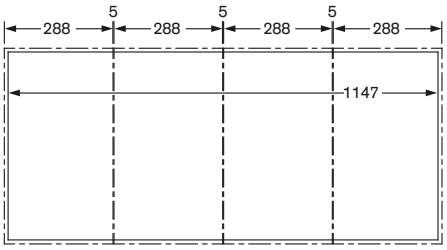

288 Appliances
5 VV 200
580*/700** Appliances
873*/993**
– 20 Overhang
853*/973** Cut-out

* VI, VE, VG 26.
** VI, VE 270

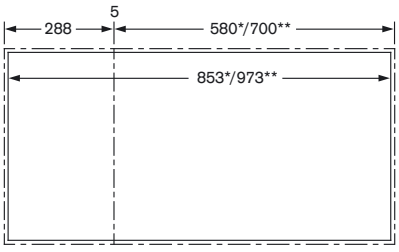

Cut-out dimensions for the Vario 200 series with downdraft

288 VI, VF, ...
5 VV 200
85 VL 041
378
– 13.5 Overhang
(10 + 3.5)
364.5 Cut-out

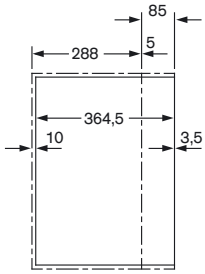

288 VI, VF, ...
5 VV 200
85 VL 041
5 VV 200
288 VI, VF, ...
671
– 20 Overhang
(10 + 10)
651 Cut-out
(= ca 650)

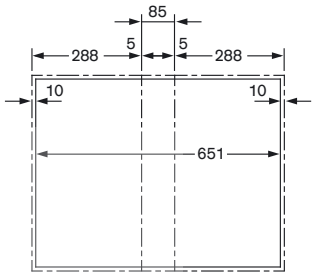

85 VL 041
5 VV 200
580 VI, VE, VG 26.
5 VV 200
85 VL 040
760
– 7 Overhang
(3.5 + 3.5)
753 Cut-out

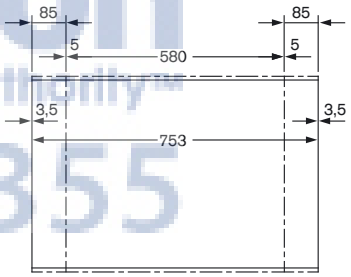

288 VI, VF, ...
5 VV 200
85 VL 041
5 VV 200
580 VI, VE, VG 26.
963
– 20 Overhang
(10 + 10)
943 Cut-out

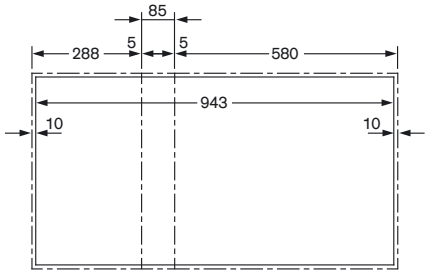

AiMadison
Your Appliance Authority
800-570-3355

AA 414 010
Ventilation moulding for use in combination with gas cooktops

SV 401 090
Spindle extensions up to 140 mm
SV 401 205
Spindle extensions up to 300 mm

SV 402 090
Spindle extensions up to 140 mm
SV 402 205
Spindle extensions up to 300 mm

SV 405 001
Spindle extensions up to 80 mm
SV 405 002
Spindle extensions up to 160 mm
SV 405 003
Spindle extensions up to 320 mm

SV 405 011
Spindle extensions up to 65 mm
SV 405 012
Spindle extensions up to 140 mm

VA 420 000
Connection strip for combination with other Vario appliances of the 400 series for flush installation

VA 420 001
Connection strip for combination with other Vario appliances of the 400 series for flush installation with appliance cover/adjustment strip

VA 420 010
Connection strip for combination with other Vario appliances of the 400 series for surface installation

VA 420 011
Connection strip for combination with other Vario appliances of the 400 series for surface installation with appliance cover/adjustment strip

VV 401 000
25 mm connecting strip for use in combination with other Vario cooking appliances in the 400 series in sections of the previous Vario 400 cooking series.
Not suitable for appliance combinations with the VL 430/431 downdraft ventilation.
For surface installation, without appliance cover.

VA 440 010
Stainless steel appliance cover with mounting strip

VA 450 110
Stainless steel adjustment strip 11 cm
Required accessory for combination of several Vario appliances of the 400 series with at least one appliance cover to compensate the appliance depth.

VA 450 400
Stainless steel adjustment strip 38 cm
Required accessory for combination of several Vario appliances of the 400 series with at least one appliance cover to compensate the appliance depth.

VA 450 600
Stainless steel adjustment strip 60 cm
Required accessory for combination of several Vario appliances of the 400 series with at least one appliance cover to compensate the appliance depth.

VA 450 800
Stainless steel adjustment strip 80 cm
Required accessory for combination of several Vario appliances of the 400 series with at least one appliance cover to compensate the appliance depth.

VA 450 900
Stainless steel adjustment strip 90 cm
Required accessory for combination of several Vario appliances of the 400 series with at least one appliance cover to compensate the appliance depth.

VA 461 000
Cast pan, enamelled, half size
For Vario electric grill 400 series.
For simultaneous frying and grilling on two separate surfaces.

VA 461 001
Cast pan, enamelled, half size
For Vario electric grill 400 series.
For simultaneous frying and grilling on two separate surfaces.

WP 400 001
Wok pan made of multiple-layer material
With round bottom and handle, ø 36 cm, 6 litres, height 10 cm.

WZ 400 001
Wok attachment for wok pan
Only for VI 414.

AjMadison
Your Appliance Authority™
800-570-3535

AM 060 000
Cast roaster

LS 041 000
Air baffle for VL 040/041 next to gas appliance

SH 230 001
Hinge holder for fitting the appliance cover

SH 260 000
Hinge holder for fitting the appliance cover

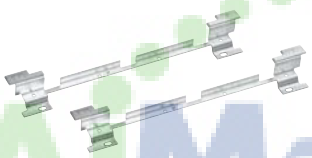

VD 201 014
Brushed stainless steel appliance cover

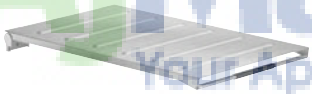

VD 201 034
Shot-blasted aluminium appliance cover

VV 200 014
Stainless steel connection strip for combination with further Vario cooktops

VV 200 034
Aluminium connection strip for combination with further Vario cooktops

AJMadison
Your Appliance Authority™
800-570-3355

AA 090 100
Circuit amplifier for connecting two remote fan units

AD 724 040
Connection piece for cylindrical duct DN 125
For VL 414/041/040.
For installation to left or right side of VL 414 additional adapter AD 724 041 necessary.

AD 724 041
Connection piece for cylindrical duct DN 125
Necessary for installation to left or right side of VL 414.

AD 854 046
Flat duct system with conducting fins
Connection piece VL 414 for DN 150 flat rectangular
Allows for long duct runs with highest efficiency due to soft duct shape and conducting fins within the duct bends
Compact installation height even with DN 150 allows integration in floor constructions

AG 050 000
Drain installation set with check valve drain set (DN 40) and connecting sleeve (½" on 1½")

AG 060 000
Drain installation set enables drainage of cooking liquid into a suitable receptacle

AS 070 000
Connection piece for extension in the case of installation next to VK or VF

FK 023 000
Pasta basket
For Series 400 and 200 Vario steam cookers
Cookig without overcooking, dripping directly in the appliance

GE 020 010
Unperforated cooking insert

GE 020 020
Perforated cooking insert

LV 030 000
Lava stones for refilling

AiMadison
Your Appliance Authority™
800-570-3355

AjMadison
Your Appliance Authority™
800-570-3355

Vario induction cooktops 400 series.

Appliance type	Induction cooktop	Induction cooktop	Full surface induction cooktop
Series	400 series	400 series	
Width	90.8	80.4	80.4
Stainless steel control panel with integrated knobs			
Aluminium control panel with integrated knobs			
Integrated control knobs			
Control knobs in furniture front	VI 491 110	VI 481 110	
TFT touch display			CX 480 111
Brushed stainless steel cooktop / 3 mm frame	–/•	–/•	–/•
Brushed stainless steel cooktop / frame			
Shot blasted stainless steel cooktop / frame			
Glass ceramic cooktop	•	•	•
Surface-mounted	•	•	•
Cooktop flush in the worktop	•	•	•
Cast pan support flush in the worktop			
Welded into stainless steel worktop			
Cooking zones / combinations			
Number of cooking zones or items of cookware	5	4	4
Super-Quick cooking zone ø 14.5 cm (1,200 W)			
Super-Quick cooking zone ø 18 cm (1,800 W)			
Super-Quick cooking zone ø 12 cm (700 W) / ø 18 cm (1,800 W)			
Super-Quick cooking zone ø 14.5 cm (1,000 W) / ø 21 cm (2,200 W)			
Super-Quick cooking zone ø 18 cm (1,500 W) / ø 23 cm (2,400 W)			
Super-Quick cooking zone ø 14.5 cm (1,100 W) / Roaster cooking zone 14.5 x 24 cm (2,000 W)			
Super-Quick cooking zone ø 18 cm (1,800 W) / together convertible to roasting zone 18 x 41.5 cm (4,400 W)			
Induction cooking zone ø 15 cm (1,400 / 1,800 W)	1	2	
Induction cooking zone ø 18 cm (1,800 / 2,500 W)	2		
Induction cooking zone ø 21 cm (2,200 / 3,300 W)	1	1	
Induction cooking zone ø 28 cm (2,400 / 3,600 W)		1	
Induction wok zone ø 18 cm (1,800 / 2,500 W) / ø 28 cm (2,800/3,600 W)			
Induction cooking zone ø 18 cm (1,800 / 2,500 W) / ø 28 cm (2,800 / 4,400 W)			
Induction cooking zone ø 21 cm (2,200 / 3,300 W) / ø 26 cm (2,600 / 3,400 W) / ø 32 cm (3,300 / 4,600 W)	1		
Features / accessories			
Electronic output control	•	•	•
Number of output levels	12	12	17
Pot detection	•	•	•
Residual heat display	•	•	•
Automatic cooking time			•
Booster function: Number of cooking zones	5	4	4
Safety lock	•	•	•
Wok pan support			
Wok pan			
Cast roaster for roaster zone 18 x 41.5 cm			
Stainless steel appliance cover			
Aluminium appliance cover			
Connection			
Total connected load	10.8	7.2	7.2

• Standard. – Not available.

[1] Special accessory.

Madison
Your Appliance Authority™
800-570-3355

Induction cooktop	Induction cooktop	Induction cooktop
400 series	400 series	400 series
59	38	38
VI 461 110	VI 414 110	VI 424 110
–/•	–/•	–/•
•	•	•
•	•	•
•	•	•
3	1	2
1		1
1		1
	1	
1		
•	•	•
12	12	12
•	•	•
•	•	•
3	1	2
•	•	•
	WZ 400 001[1]	
	WP 400 001[1]	
	VA 440 010[1,2]	VA 440 010[1,2]
	-	-
7.2	3.6	3.6

AjMadison
Your Appliance Authority™
800-570-3355

Vario induction and glass ceramic cooktops 200 series.

Appliance type	Induction cooktop	Induction cooktop	Induction cooktop
Series	200 series	200 series	200 series
Width	70	58	28.8
Stainless steel control panel with integrated knobs	VI 270 114	VI 260 114	VI 230 114
Aluminium control panel with integrated knobs	VI 270 134	VI 260 134	VI 230 134
Integrated control knobs			
Control knobs in furniture front			
TFT touch display			
Brushed stainless steel cooktop / 3 mm frame			
Brushed stainless steel cooktop / frame			
Shot blasted stainless steel cooktop / frame			
Glass ceramic cooktop	•	•	•
Surface-mounted	•	•	•
Cooktop flush in the worktop			
Cast pan support flush in the worktop			
Welded into stainless steel worktop			
Cooking zones / combinations			
Number of cooking zones or items of cookware	4	4	2
Super-Quick cooking zone ø 14.5 cm (1,200 W)			
Super-Quick cooking zone ø 18 cm (1,800 W)			
Super-Quick cooking zone ø 12 cm (700 W) / ø 18 cm (1,800 W)			
Super-Quick cooking zone ø 14.5 cm (1,000 W) / ø 21 cm (2,200 W)			
Super-Quick cooking zone ø 18 cm (1,500 W) / ø 23 cm (2,400 W)			
Super-Quick cooking zone ø 14.5 cm (1,100 W) / Roaster cooking zone 14.5 x 24 cm (2,000 W)			
Super-Quick cooking zone ø 18 cm (1,800 W) / together convertible to roasting zone 18 x 41.5 cm (4,400 W)			
Induction cooking zone ø 15 cm (1,400 / 1,800 W)	1	1	1
Induction cooking zone ø 18 cm (1,800 / 2,500 W)	2	2	
Induction cooking zone ø 21 cm (2,200 / 3,300 W)	1	1	1
Induction cooking zone ø 28 cm (2,400 / 3,600 W)			
Induction wok zone ø 18 cm (1,800 / 2,500 W) / ø 28 cm (2,800 / 3,600 W)			
Induction cooking zone ø 18 cm (1,800 / 2,500 W) / ø 28 cm (2,800 / 4,400 W)			
Induction cooking zone ø 21 cm (2,200 / 3,300 W) / ø 26 cm (2,600 / 3,400 W) / ø 32 cm (3,300 / 4,600 W)			
Features / accessories			
Electronic output control	•	•	•
Number of output levels	9	9	9
Pot detection	•	•	•
Residual heat display	•	•	•
Automatic cooking time			
Booster function: Number of cooking zones	4	4	2
Safety lock	•	•	•
Wok pan support			
Wok pan			
Cast roaster for roaster zone 18 x 41.5 cm			
Stainless steel appliance cover	-	-	VD 201 014[1]
Aluminium appliance cover	-	-	VD 201 034[1]
Connection			
Total connected load	7.2	7.2	3.6

• Standard. – Not available.

[1] Special accessory.

AJMadison
Your Appliance Authority™
800-570-3355

Glass ceramic cooktop	Glass ceramic cooktop	Glass ceramic cooktop
200 series	200 series	200 series
70	58	28.8
VE 270 114	VE 260 114	VE 230 114
	VE 260 134	VE 230 134
•	•	•
•	•	•
4	4	2
1	2	1
1	2	
		1
1		
1		
9	9	9
•	•	•
-	-	VD 201 014[1]
-	-	VD 201 034[1]
7.2	6.0	3.0

AjMadison
Your Appliance Authority™
800-570-3355

Vario gas cooktops 400 series.

Appliance type	Gas cooktop	Gas cooktop	Gas wok	Gas wok
Series	Serie 400	Serie 400	Serie 400	Serie 400
Bottled gas 50 mbar	•		•	
Natural gas 20 mbar		•		•
Width	90.8	90.8	38	38
Stainless steel control panel with integrated knobs				
Aluminium control panel with integrated knobs				
Integrated control knobs				
Control knobs in furniture front	VG 491 110F	VG 491 210	VG 415 110F	VG 415 210
Brushed stainless steel cooktop / 3 mm frame	•/•	•/•	•/•	•/•
Brushed stainless steel cooktop / frame				
Shot blasted stainless steel cooktop / frame				
Glass ceramic cooktop				
Surface-mounted	•	•	•	•
Cooktop flush in the worktop	•	•	•	•
Cast pan support flush in the worktop				
Welded into stainless steel worktop				
Cooking zones / combinations				
Number of cooking zones	5	5	1	1
Three-ring wok burner (180 – 5,600 W)				
Three-ring wok burner (250 – 5,000 W)				
Three-ring wok burner (250 – 6,000 W)				
Three-ring wok burner (300 – 5,000 W)	1		1	
Three-ring wok burner (300 – 6,000 W)		1		1
Two-ring high output burner (150 – 4,000 W)	2	2		
Two-ring standard output burner (150 – 2,000 W)	2	2		
Two-ring high output burner (165 – 4,000 W)				
Two-ring standard output burner (165 – 2,000 W)				
High output burner (560 – 2,800 W)				
High output burner (590 – 2,800 W)				
Standard burner (380 – 1,900 W)				
Features / accessories				
Electronic output control			•	•
Number of output levels			12	12
Simmer function			•	•
Automatic fast ignition	•	•	•	•
Electronic flame monitoring with automatic re-ignition	•	•	•	•
Electric ignition				
Residual heat display			•	•
Safety shut-off			•	•
Cast pan support	3-part	3-part	1-part	1-part
Stainless steel appliance cover			VA 440 010[1,2]	VA 440 010[1,2]
Aluminium appliance cover				
Wok pan	WP 400 001[1]	WP 400 001[1]	WP 400 001[1]	WP 400 001[1]
Connection				
Total connected load gas	17.0	18.0	5.0	6.0
Total connected load electric	15.0	15.0	15.0	15.0

• Standard. – Not available.

[1] Special accessory.

AjMadison
Your Appliance Authority
800-570-3355

Gas cooktop	Gas cooktop	Gas wok	Gas wok	Gas cooktop	Gas cooktop
Serie 400	Serie 400	Serie 400	Serie 400	Serie 400	Serie 400
•		•		•	
	•		•		•
38	38	38	38	38	38
VG 425 110F	VG 425 210	VG 414 110F	VG 414 210	VG 424 110F	VG 424 210
•/•	•/•	•/•	•/•	•/•	•/•
•	•	•	•	•	•
•	•	•	•	•	•
2	2	1	1	2	2
		1	1		
				1	1
				1	1
1	1				
1	1				
•	•				
12	12				
•	•				
•	•	•	•	•	•
•	•	•	•	•	•
•	•				
•	•				
1-part	1-part	1-part	1-part	1-part	1-part
VA 440 010[1,2]	VA 440 010[1,2]	VA 440 010[1,2]	VA 440 010[1,2]	VA 440 010[1,2]	VA 440 010[1,2]
		-	-	-	-
		WP 400 001[1]	WP 400 001[1]		
6.0	6.0	5.0	5.0	6.0	6.0
15.0	15.0	15.0	15.0	15.0	15.0

AjMadison
Your Appliance Authority™
800-570-3355

Vario gas cooktops 200 series.

Appliance type		Gas cooktop	Gas cooktop
Series		200 series	200 series
Bottled gas 50 mbar			
Bottled gas 28–37 mbar		•	
Natural gas 20 mbar			•
Width	(cm)	58	58
Stainless steel control panel with integrated knobs		VG 264 114F	VG 264 214
Aluminium control panel with integrated knobs		VG 264 134F	VG 264 234
Integrated control knobs			
Control knobs in furniture front			
Brushed stainless steel cooktop / frame		•/–	•/–
Shot blasted stainless steel cooktop / frame		–/•	–/•
Glass ceramic cooktop			
Surface-mounted		•	•
Cooktop flush in the worktop			
Cast pan support flush in the worktop			
Welded into stainless steel worktop			
Cooking zones			
Number of cooking zones		4	4
Three-ring wok burner (180 – 5,600 W)			
Three-ring wok burner (250 – 5,000 W)			
Three-ring wok burner (250 – 6,000 W)			
Three-ring wok burner (300 – 5,000 W)			
Three-ring wok burner (300 – 6,000 W)			
Two-ring high output burner (165 – 4,000 W)			
Two-ring standard output burner (165 – 2,000 W)			
High output burner (560 – 2,800 W)		2	2
High output burner (590 – 2,800 W)			
Standard burner (380 – 1,900 W)		2	2
Features / accessories			
Electronic output control			
Automatic fast ignition			
Electronic flame monitoring with automatic re-ignition			
Electric ignition		•	•
Residual heat display			
Safety shut-off			
Cast pan support		2–part	2–part
Stainless steel appliance cover		2x VD 201 014[1]	2x VD 201 014[1]
Aluminium appliance cover		2x VD 201 034[1]	2x VD 201 034[1]
Wok pan			
Connection			
Total connected load gas	(kW)	9.4	9.4
Total connected load electric	(W)	1.0	1.0

• Standard. – Not available.

[1] Special accessory.

AjMadison
Your Appliance Authority™
800-570-3355

Gas wok	Gas wok	Gas cooktop	Gas cooktop
200 series	200 series	200 series	200 series
•		•	
	•		•
28.8	28.8	28.8	28.8
VG 231 114F	VG 231 214	VG 232 114F	VG 232 214
VG 231 134F	VG 231 234	VG 232 134F	VG 232 234
•/–	•/–	•/–	•/–
–/•	–/•	–/•	–/•
•	•	•	•
1	1	2	2
1			
	1		
		1	1
		1	1
•	•	•	•
1–part	1–part	1–part	1–part
VD 201 014[1]	VD 201 014[1]	VD 201 014[1]	VD 201 014[1]
VD 201 034[1]	VD 201 034[1]	VD 201 034[1]	VD 201 034[1]
WP 400 001[1]	WP 400 001[1]		
5.0	6.0	4.7	4.7
1.0	1.0	1.0	1.0

AjMadison
Your Appliance Authority™
800-570-3355

Vario special cooktops 400 and 200 series.

Appliance type	Teppan Yaki	Electric grill	Steamer	Deep fryer
Series	400 series	400 series	400 series	400 series
Width	38	38	38	38
Stainless steel control panel with integrated knobs				
Aluminium control panel with integrated knobs				
Control knobs in furniture front	VP 414 110	VR 414 110	VK 414 110	VF 414 110
Brushed stainless steel cooktop / 3 mm frame	•/•	•/•	•/•	•/•
Brushed stainless steel cooktop / frame				
Shot blasted stainless steel cooktop / frame				
Glass ceramic cooktop				
Surface-mounted	•	•	•	•
Cooktop flush in the worktop	•	•	•	•
Cast pan support flush in the worktop				
Welded into stainless steel worktop				
Cooking zones				
Number of cooking zones	2	2	1	1
Output	2 x 1.5	2 x 1.5	2	3
Temperature range	120 – 240		45 – 95	135 – 190
Number of output levels	12	12	12	12
Features / accessories				
Electronic temperature control	•	•	•	•
Gentle fat melting stage				•
Cold oil zone				•
Foaming edge				•
Capacity			1 – 6	3.5
Deep frying basket				•
Cleaning setting				•
Electronic steam control			•	
Automatic boiling point detection			•	
Cooking insert perforated / unperforated			•/•	
Pasta basket			FK 023 000[1]	
Glass lid			•	
Residue strainer in the drain			•	
Cast grill		2		
Stainless steel container with lava stones		•		
Grease collecting insert		•		
Hard-chromed cooking surface	•			
Stainless steel sandwich cooking surface				
Keeping warm setting	•			
Residual heat indicator	•	•	•	•
Function display				
Motor-driven drain valve			•	
Drain installation set			AG 050/AG 060[1]	
Short-term timer				
Cooking timer				
Child lock				
Safety lock	•	•	•	•
Stainless steel appliance cover	VA 440 010[1,3]	VA 440 010[1,3]	VA 440 010[1,3]	VA 440 010[1,3]
Aluminium appliance cover				
Cast pan, half size		•		
Cast pan, full size		VA 461 001[1,3]		
Cleaning brush		•		
Spatula	2			
Connection				
Total connected load	3.0	3.0	2.0	3.0

• Standard. – Not available.

[1] Special accessory.

[2] According to appliance colour.

AjMadison
Your Appliance Authority™
800-570-3355

Teppan Yaki	Electric grill	Steamer	Deep fryer
200 series	200 series	200 series	200 series
28.8	28.8	28.8	28.8
VP 230 114	VR 230 114	VK 230 114	VF 230 114
VP 230 134	VR 230 134	VK 230 134	
•/-	-/-	-/-	-/-
-/•	-/•	-/•	-/•
-	-	-	-
•	•	•	•
1	2	1	1
1.8	2 x 1.5	2.3	2.3
120 – 240		45 – 95	135 – 190
13	9	9	9
•		•	•
			•
			•
			•
		1 – 6	3.5
			•
		•	
		•	
		•/•	
		FK 023 000[1]	
		•	
		•	
	1		
	•		
	•		
•			
•			
•			
		•	•
		•	
		AG 050/AG 060[1]	
		•	•
		•	
		•	•
•		•	•
VD 201 014[1]	•[2]	VD 201 014[1]	VD 201 014[1]
VD 201 034[1]	•[2]	VD 201 034[1]	-
	AM 060 000[1]		
	•		
2			
1.8	3.0	2.3	2.3

AjMadison
Your Appliance Authority™
800-570-3355

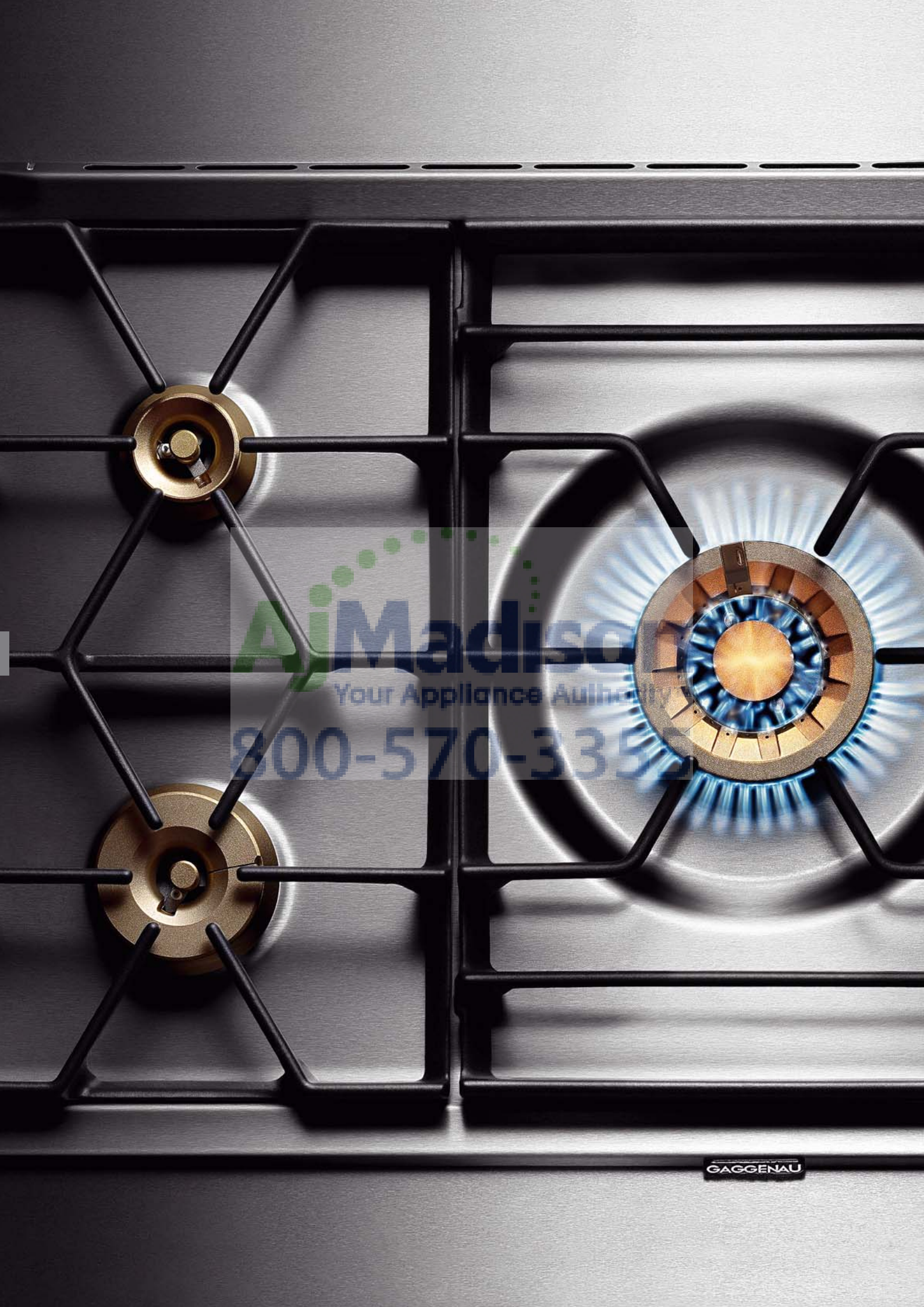
GAGGENAU

Cooktops.

Gas cooktops. 152

Induction cooktops. 162

Planning notes for Induction cooktops. 178

Glass ceramic cooktops. 179

Accessories / Special accessories. 185

Technical specifications. 186

AjMadison
Your Appliance Authority™
800-570-3355

CG 492 110F
Stainless steel
Width 100 cm
Liquid gas 28 – 37 mbar
Wok burner with 5 KW

CG 492 210
Stainless steel
Width 100 cm
Natural gas 20 mbar
Wok burner with 6 KW

Necessary installation accessories

CA 429 410
Frame set including decorative frame (to be welded in) and holding frame

Installation accessories

SV 405 022
Spindle extensions up to 115 mm

SV 405 032
Spindle extensions up to 160 mm

Special accessories

WP 400 001
Wok pan made of multiple-layer material
With round bottom and handle, ø 36 cm, 6 litres, height 10 cm.

product design award 2009

Gas cooktop
CG 492

- Top appliance in the market, up to 18 kW on 5 burners
- Solid smooth-surface cast pan supports on the same level as the worktop
- Automatic fast ignition, electronic flame monitoring
- Solid stainless steel control knob

Cooking zones

CG 492 110F
1 three-ring wok burner
(300 W – 5,000 W), suitable for pots up to max. ø 32 cm.
2 two-ring high output burners
(165 W – 4,000 W), suitable for pots up to max. ø 28 cm.
2 two-ring standard burners
(165 W – 2,000 W), suitable for pots up to max. ø 28 cm.

CG 492 210
1 three-ring wok burner
(300 W – 6,000 W), suitable for pots up to max. ø 32 cm.
2 two-ring high output burners
(165 W – 4,000 W), suitable for pots up to max. ø 28 cm.
2 two-ring standard burners
(165 W – 2,000 W), suitable for pots up to max. ø 28 cm.

Handling

Control knobs with cooking zone and output level markings.
One-handed operation.
Gas valve with fine control.

Features

Three-part pan support with flat, continuous pot surface, on the same level as the worktop.
Brass burner rings.

Safety

Electronic flame monitoring with automatic re-ignition.
Automatic fast ignition.

Planning notes

The frame set (necessary installation accessory)can be sent in advance to the manufacturer of the stainless steel or granite worktop for fitting.
Special nozzles can be ordered as spare parts.
Plan for an electrical connection (the appliance is not operable without power supply).
Panel thickness 16 – 26 mm.
The drawing "Installation of the control knob" must be observed if the panel is more than 26 mm thick (there must be a recess at the rear).
Minimum worktop depth 70 cm.
Control knobs can be integrated in the lower cabinet at drawer level.
Air intake from above.
No intermediate shelf required.
Due to the separate frame welded into the worktop, all parts remain fully accessible.
Rear panel and wall trims must be heat-resistant and consist of a non-flammable material.
The appliance can be fixed from above.
A minimum lateral clearance of at least 300 mm from adjacent heat-sensitive furniture or contact surfaces must be observed or thermal insulation fitted.
Cooktop clamping range: 40 – 50 mm.

With a total connected load of more than 12 kW local regulations concerning room ventilation, room size and combination of extraction or recirculation hoods must be observed.
Minimum clearance between gas cooktop(s) with more than 12 kW and ventilation hood 70 cm.
The combination with VL 430/431 is not recommended, since the air extraction from the centre burner cannot be guaranteed due to the distance.
Appliance weight: approx. 34 kg.

Connection

Total connected load gas 17.0/18.0 kW.
Connecting cable 1.4 m with plug.

AJMadison
Your Appliance Authority™
800-570-3355

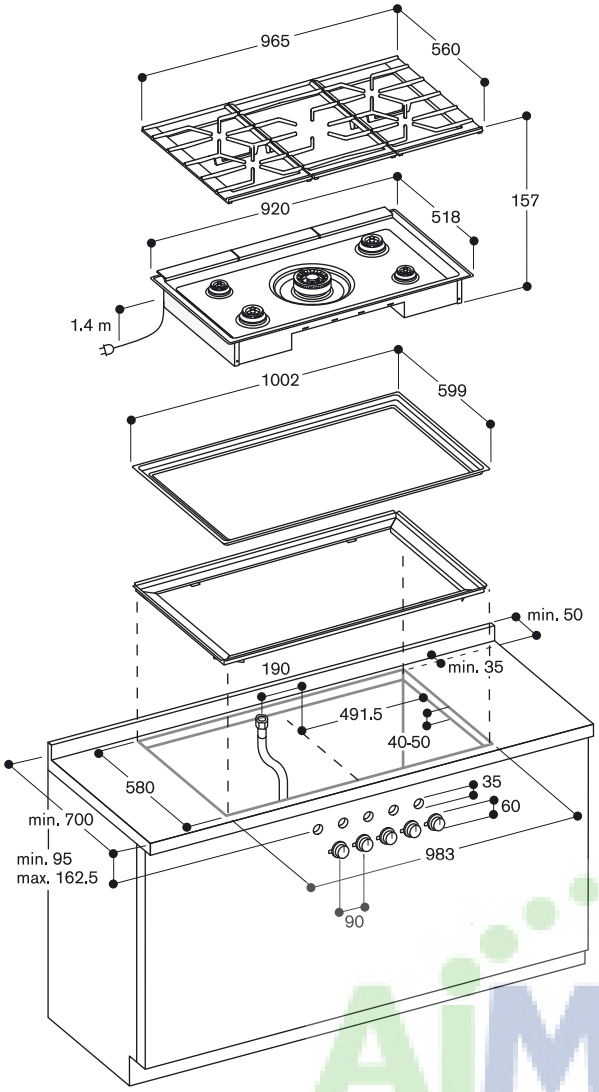

Cross-section

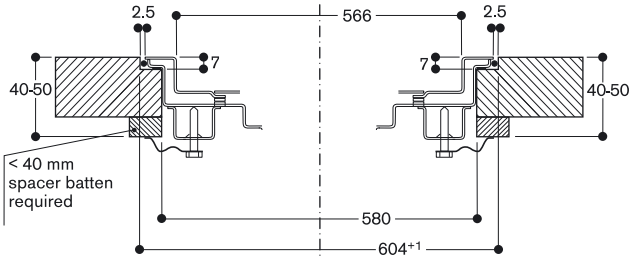

Gas connection

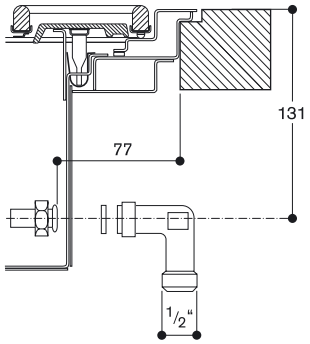

Possible axis extension

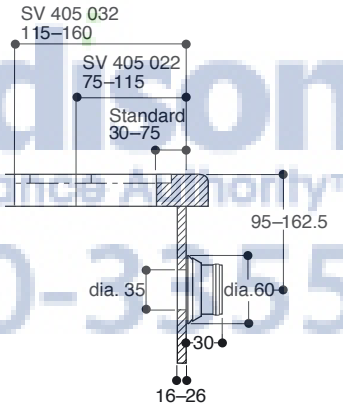

View from above

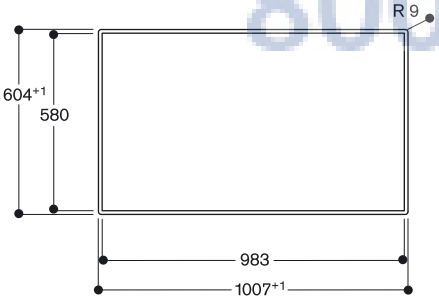

Installation of the control knob

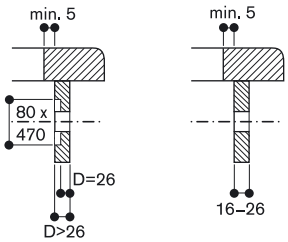

Longitudinal section

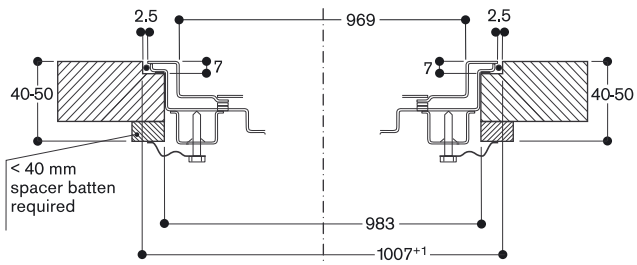

AjMadison
Your Appliance Authority™
800-570-3355

VG 295 114F
Stainless steel with stainless steel control panel
Width 90 cm
Liquid gas 28 – 37 mbar
Wok burner with 5 KW

VG 295 214
Stainless steel with stainless steel control panel
Width 90 cm
Natural gas 20 mbar
Wok burner with 6 KW

VG 295 134F
Stainless steel with aluminium control panel
Width 90 cm
Liquid gas 28 – 37 mbar
Wok burner with 5 KW

VG 295 234
Stainless steel with aluminium control panel
Width 90 cm
Natural gas 20 mbar
Wok burner with 6 KW

Special accessories

WP 400 001
Wok pan made of multiple-layer material
With round bottom and handle,
ø 36 cm, 6 litres, height 10 cm.

200 series gas cooktop
VG 295

- Top appliance in the market, up to 18 kW on 5 burners
- Solid smooth-surface cast pan supports
- Automatic fast ignition, electronic flame monitoring

Cooking zones

VG 295 114F
1 three-ring wok burner
(300 W – 5,000 W), suitable for pots up to max. ø 32 cm.
2 two-ring high output burners
(165 W – 4,000 W), suitable for pots up to max. ø 28 cm.
2 two-ring standard burners
(165 W – 2,000 W), suitable for pots up to max. ø 28 cm.

VG 295 214
1 three-ring wok burner
(300 W – 6,000 W), suitable for pots up to max. ø 32 cm.
2 two-ring high output burners
(165 W – 4,000 W), suitable for pots up to max. ø 28 cm.
2 two-ring standard burners
(165 W – 2,000 W), suitable for pots up to max. ø 28 cm.

VG 295 134F
1 three-ring wok burner
(300 W – 5,000 W), suitable for pots up to max. ø 32 cm.
2 two-ring high output burners
(165 W – 4,000 W), suitable for pots up to max. ø 28 cm.
2 two-ring standard burners
(165 W – 2,000 W), suitable for pots up to max. ø 28 cm.

VG 295 234
1 three-ring wok burner
(300 W – 6,000 W), suitable for pots up to max. ø 32 cm.
2 two-ring high output burners
(165 W – 4,000 W), suitable for pots up to max. ø 28 cm.
2 two-ring standard burners
(165 W – 2,000 W), suitable for pots up to max. ø 28 cm.

Handling
Integrated control panel with cooking zone and output level markings.
One-handed operation.
Gas valve with fine control.

Features
Three-part cast pan support with flat, continuous pot surface.
Brass burner rings.

Safety
Electronic flame monitoring with automatic re-ignition.
Automatic fast ignition.

Planning notes
Special nozzles can be ordered as spare parts.
Plan for an electrical connection (the appliance is not operable without power supply).
Panel thickness 16 – 26 mm.
Air intake from above.
No intermediate shelf required.
Rear panel and wall trims must be heat-resistant and consist of a non-flammable material.

Installation in a 90 cm wide lower cabinet is required.
An oven can be installed under the cooktop.
Appliance must be fixed from underneath.
A minimum lateral clearance of at least 300 mm from adjacent heat-sensitive furniture or contact surfaces must be observed or thermal insulation fitted.
Cooktop clamping range: 30 – 50 mm.
With a total connected load of more than 12 kW local regulations concerning room ventilation, room size and combination of extraction or recirculation hoods must be observed.
Minimum clearance between gas cooktop(s) with more than 12 kW and ventilation hood 70 cm.
Appliance weight: approx. 30 kg.

Connection
Total connected load gas 17.0/18.0/17.0/18.0 kW.
Connecting cable 1.4 m with plug.

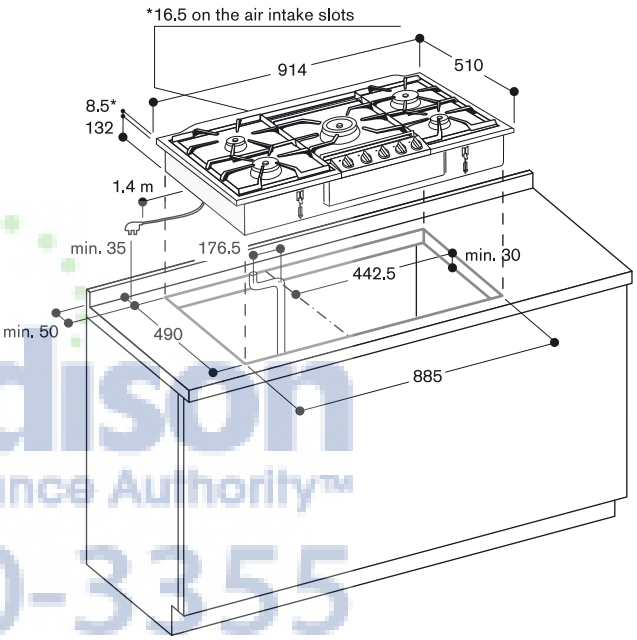

Gas connection

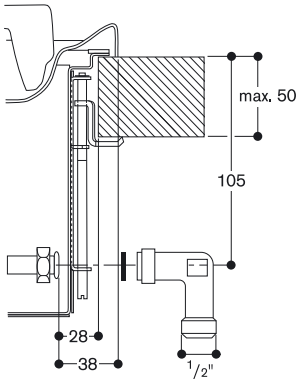

AJMadison
Your Appliance Authority™
800-570-3355

AjMadison
Your Appliance Authority™
800-570-3355

CG 290 111F
Glass ceramic
Width 90 cm
Liquid gas 28 – 37 mbar

CG 290 211
Glass ceramic
Width 90 cm
Natural gas 20 mbar
Nozzles for liquid gas 50 mbar included

Special accessories

WP 400 001
Wok pan made of multiple-layer material
With round bottom and handle,
ø 36 cm, 6 litres, height 10 cm.

Gas cooktop
CG 290

- For flush or conventional installation
- Two-ring burner with 6,000 W

Cooking zones
1 wok burner with 2 separately adjustable flame rings (300 W - 6,000 W), suitable for pots up to max. ø 32 cm.
1 high output burner (590 – 2,800 W), suitable for pots up to max. ø 26 cm.
2 standard burners (370 – 1,900 W), suitable for pots up to max. ø 20 cm.
1 economy burner (310 – 1,100 W), suitable for pots up to max. ø 14 cm.

Handling
Control knobs with cooking zone and output level markings.
One-handed operation.
Electric ignition.

Features
Three-part cast pan support with continuous pot surface.
Enamelled burner cover.

Safety
Thermoelectric safety pilot.

Planning notes
The cooktop can be conventionally built into worktops or flush integrated into stone worktops.
Special nozzles can be ordered as spare parts.
Installation in a 85 cm niche or a 88 cm niche with the included spacers.
Air intake from above.
Intermediate shelf is required.
Appliance must be fixed from underneath.
A minimum clearance of at least 150 mm from adjacent heat-sensitive furniture or contact surfaces must be observed or thermal insulation fitted.
Cooktop clamping range: 30 – 50 mm.
With a total connected load of more than 12 kW local regulations concerning room ventilation, room size and combination of extraction or recirculation hoods must be observed.
Minimum clearance between gas cooktop(s) with more than 12 kW and ventilation hood 70 cm.
Appliance weight: approx. 20 kg.

Connection
Total connected load gas 13.7/13.7 kW.
Connecting cable 1.0 m without plug.

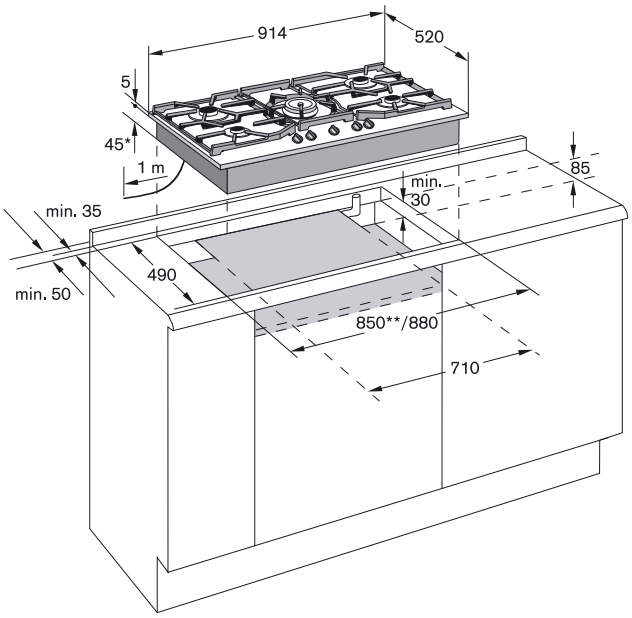

* 63.5 mm in the area of the gas connection at the back right

Gas connection fitted conventionally

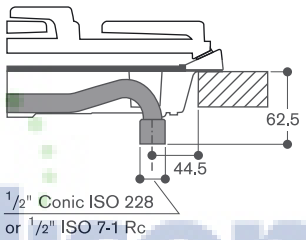

1/2" Conic ISO 228
or 1/2" ISO 7-1 Rc

A Madison
Your Appliance Authority™
800-570-3355

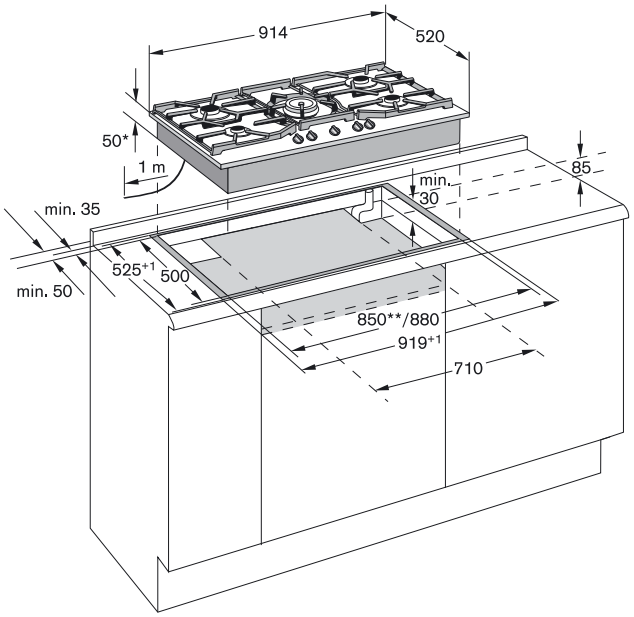

* 63.5 mm in the area of the gas connection at the back right

Gas connection fitted flush

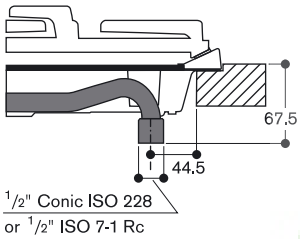

View from above

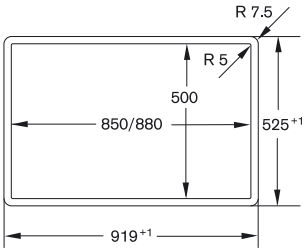

Longitudinal section

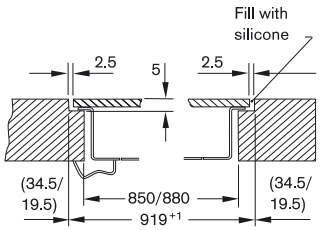

Cross-section

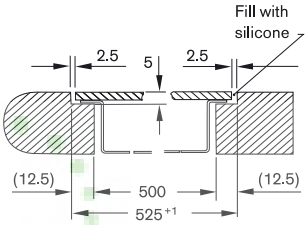

AjMadison
Your Appliance Authority™
800-570-3355

CG 280 110F
Stainless steel
Width 80 cm
Liquid gas 28 – 37 mbar

CG 280 210
Stainless steel
Width 80 cm
Natural gas 20 mbar
Nozzles for liquid gas 50 mbar included

Included in the price
1 wok attachment ring

Necessary installation accessories
CA 280 410
Built-in frame (to be welded in)

Special accessories
WP 400 001
Wok pan made of multiple-layer material
With round bottom and handle, ø 36 cm, 6 litres, height 10 cm.

Gas cooktop
CG 280

- For flush installation
- 80 cm wide appliance suitable for 60 cm deep worktops
- 12.1 kW on 5 burners

Cooking zones
CG 280 110F
1 two-ring wok burner (230 – 4,600 W), suitable for pots up to max. ø 28 cm.
1 high output burner (600 – 3,000 W), suitable for pots up to max. ø 24 cm.
1 standard output burner (410 – 1,750 W), suitable for pots up to max. ø 22 cm.
1 standard output burner (410 – 1,750 W), suitable for pots up to ø 18 cm.
1 economy burner (330 – 1,000 W), suitable for pots up to max. ø 18 cm.

CG 280 210
Preset for natural gas 20 mbar
1 two-ring wok burner (230 – 5,000 W), suitable for pots up to max. ø 28 cm.
1 high output burner (500 – 3,000 W), suitable for pots up to max. ø 24 cm.
1 standard output burner (350 – 1,750 W), suitable for pots up to max. ø 22 cm.
1 standard output burner (350 – 1,750 W), suitable for pots up to ø 18 cm.
1 economy burner (330 – 1,000 W), suitable for pots up to max. ø 18 cm.

For bottled gas 50 mbar (nozzles included)
1 two-ring wok burner (230 – 4,600 W), suitable for pots up to max. ø 28 cm.
1 high output burner (600 – 3,000 W), suitable for pots up to max. ø 24 cm.
1 standard output burner (410 – 1,750 W), suitable for pots up to max. ø 22 cm.
1 standard output burner (410 – 1,750 W), suitable for pots up to ø 18 cm.
1 economy burner (330 – 1,000 W), suitable for pots up to max. ø 18 cm.

Handling
Control knobs with cooking zone and output level markings.
One-handed operation.

Features
Three-part cast pan support with continuous pot surface.
Enamelled burner cover.

Safety
Thermoelectric safety pilot.

Planning notes
Built-in frame CA 280 410 as required installation accessory.
Can be welded into stainless steel worktop.
Special nozzles can be ordered as spare parts.
Plan for an electrical connection (the appliance is not operable without power supply).
Air intake from above.
No intermediate shelf required.
Appliance must be fixed from underneath.
Access from above.
Rear panel and wall trims must be heat-resistant and consist of a non-flammable material.

A minimum clearance of at least 150 mm from adjacent heat-sensitive furniture or contact surfaces must be observed or thermal insulation fitted.
Cooktop clamping range: 30 – 50 mm.
With a total connected load of more than 12 kW local regulations concerning room ventilation, room size and combination of extraction or recirculation hoods must be observed.
Minimum clearance between gas cooktop(s) with more than 12 kW and ventilation hood 70 cm.

Special accessories
(order as spare parts):
Part No. 648786 Simmer plate
Part No. 088903 Espresso cross

Appliance weight: approx. 19 kg.

Connection
Total connected load gas 12.1/12.5 kW.
Connecting cable 1.4 m with plug.

AJ Madison
Your Appliance Authority™
800-570-3355

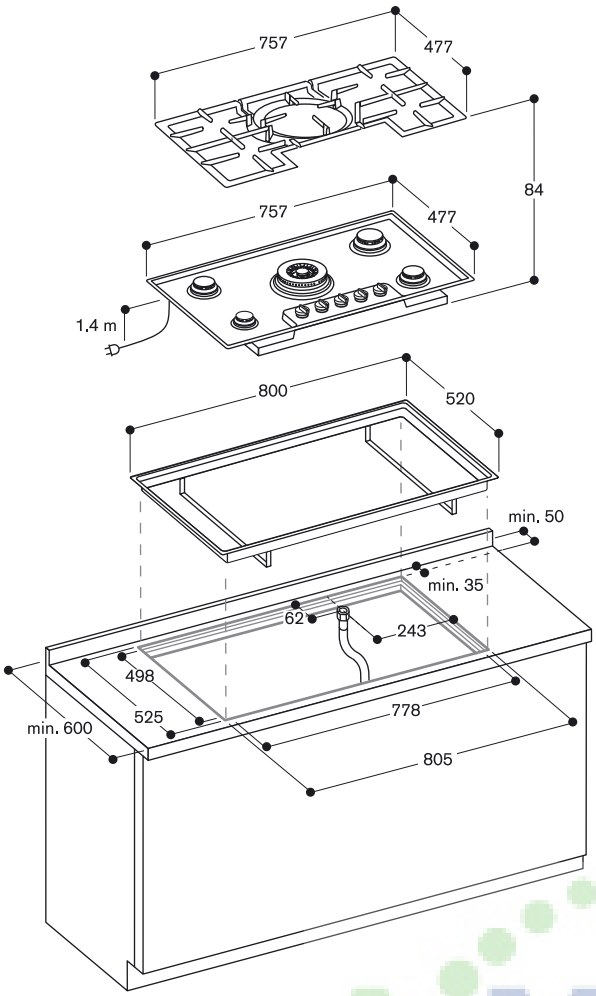

Longitudinal section

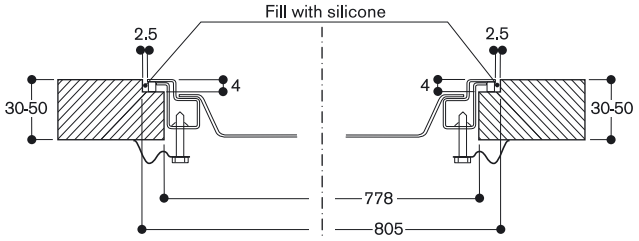

Cross-section

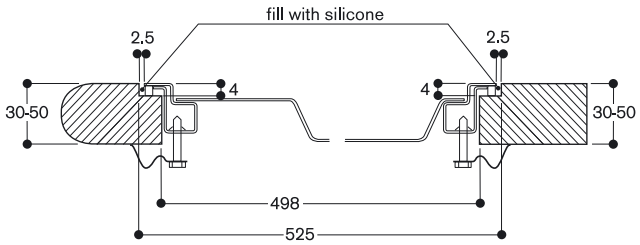

View from above

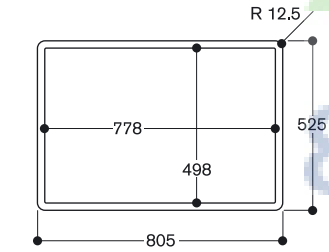

Gas connection

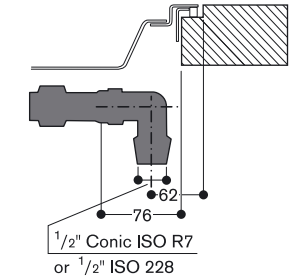

AjMadison
Your Appliance Authority™
800-570-3355

CG 270 211
Stainless steel
Width 70 cm
Natural gas 20 mbar
Nozzles for liquid gas 50 mbar and liquid gas 28-30/37 mbar included

Included in the price
1 wok attachment ring
1 cross support for espresso

Gas cooktop
CG 270

- For flush or conventional installation
- 9.75 KW with burners in a diamond-shaped arrangement

Cooking zones
1 three-ring wok burner (1,550 W – 4,000 W), suitable for pots up to max. ø 30 cm.
1 high output burner (500 W - 3,000 W), suitable for pots up to max. ø 26 cm.
1 standard burner (350 W – 1,750 W), suitable for pots up to max. ø 20 cm.
1 economy burner (330 W – 1,000 W), suitable for pots up to max. ø 16 cm.

Handling
Control knobs with cooking zone and output level markings.
One-handed operation.
Electric ignition.

Features
Three-part cast pan support with continuous pot surface.
Enamelled burner cover.

Safety
Thermoelectric safety pilot.

Planning notes
The cooktop can be conventionally built into worktops or flush integrated into stone worktops.
Special nozzles can be ordered as spare parts.
Installation in a 56 cm standard niche.
Air intake from above.
Intermediate shelf is recommended.
Allow for a gas connection when planning drawer depth.
Appliance must be fixed from underneath.
A minimum lateral clearance of at least 150 mm from adjacent heat-sensitive furniture or contact surfaces must be observed or thermal insulation fitted.
Cooktop clamping range: 30 – 50 mm.
Appliance weight: approx. 18 kg.

Connection
Total connected load gas 9.75 KW.
Connecting cable 1.0 m without plug.

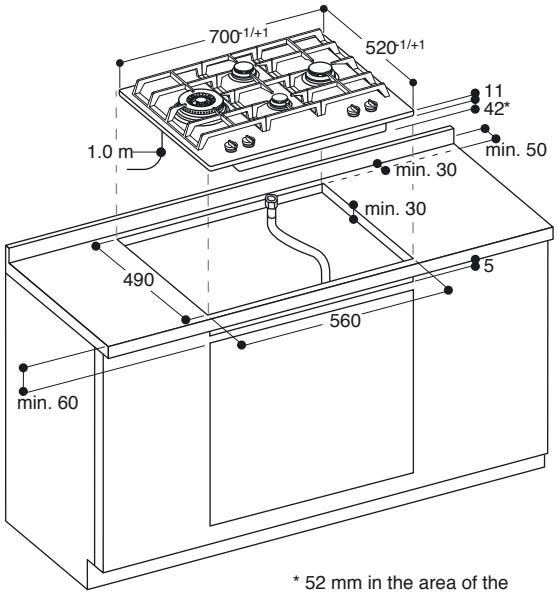

* 52 mm in the area of the gas connection at the back right

Gas connection fitted conventionally

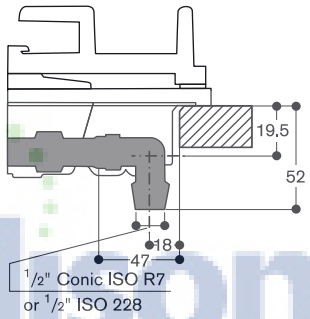

AJMadison
Major Appliance Authority™
800-570-3355

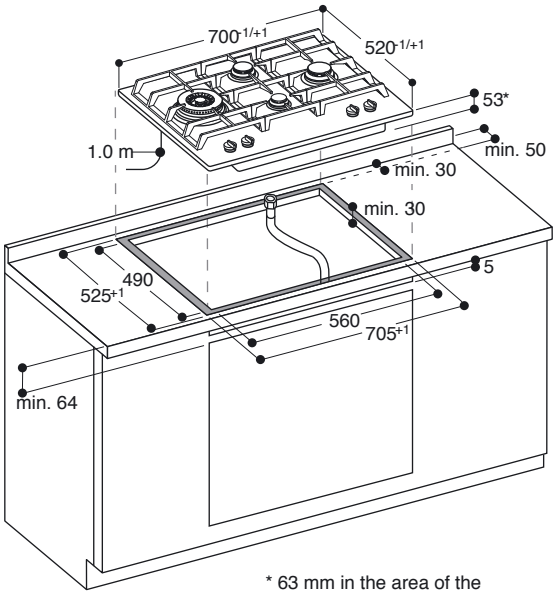

* 63 mm in the area of the gas connection at the back right

View from above

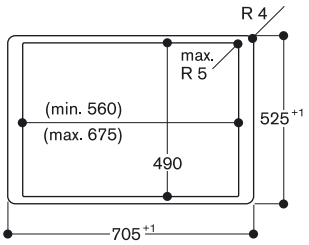

Longitudinal section

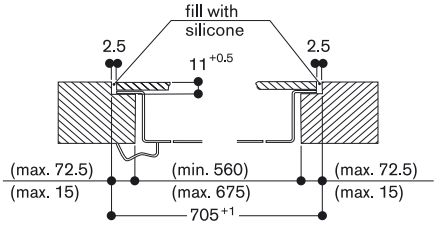

Cross-section

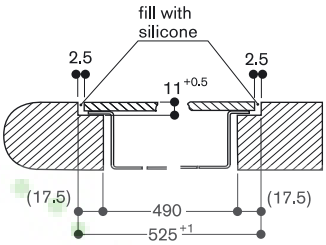

Gas connection fitted flush

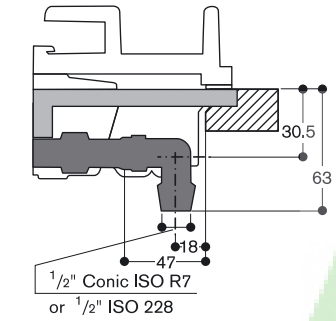

AjMadison
Your Appliance Authority™
800-570-3355

CX 480 100
Frameless
Width 80 cm

Special accessories

GN 232 110
Teppan Yaki made of multi ply material, GN 1/1
For full surface induction hob CX 480.

GN 232 230
Teppan Yaki made of multi ply material, GN 2/3
For full surface induction hob CX 480.

Full surface induction cooktop
CX 480

- One single big cooking surface
- Free positioning of cookware
- All sizes and formats of cookware can be used
- TFT touch display for an intuitive control of all functions
- Max. power output for big cookware of up to 4.4 kW
- Frameless for flush installation

Cooking zones
One unique cooking surface of 2,800 cm².
Up to 4 items of cookware can be placed simultaneously on the cooktop.

Handling
Easy to use colour graphic TFT touch display with use indications.
Electronic power control in 17 output levels.

Features
Booster function.
Individual pot detection.
Cooking timer for each cooking position.
Timer.
Information key with use indications.
Power management.

Safety
Main switch.
Residual heat indicator.
Child lock.
Display cleaning protection.

Planning notes
Operates with magnetic (induction) iron pots and pans only. For an optimal heat distribution, the use of sandwich bottom cookware is recommended.
The wok pan WP 400 001 cannot be used with this appliance.
Installation is possible in worktops made of stone, synthetics or solid wood. Heat resistance and watertight sealing of the cut edges must be observed. Concerning other materials please consult the worktop manufacturer.
The bearing capacity and stability, in the case of thin worktops in particular, must be supported using suitable substructures. Take into account the appliance weight and additional loads.
The groove must be continuous and even, so that uniform placing of the appliance on the gasket is ensured. Do not use discontinuous lining.
Immersion depth 64.6 mm.
Intermediate shelf is required.
Appliance must be fixed from underneath.
Cooktop clamping range: 30 – 50 mm.
Joint width may vary due to dimensional tolerances of the glass ceramic cooktop and the worktop cut-out.
Appliance weight: approx. 26 kg.

Please read additional planning notes on page 178.

Connection
Total connected load 7.2 kW.
Connecting cable 1.5 m without plug.

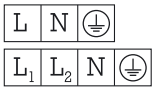

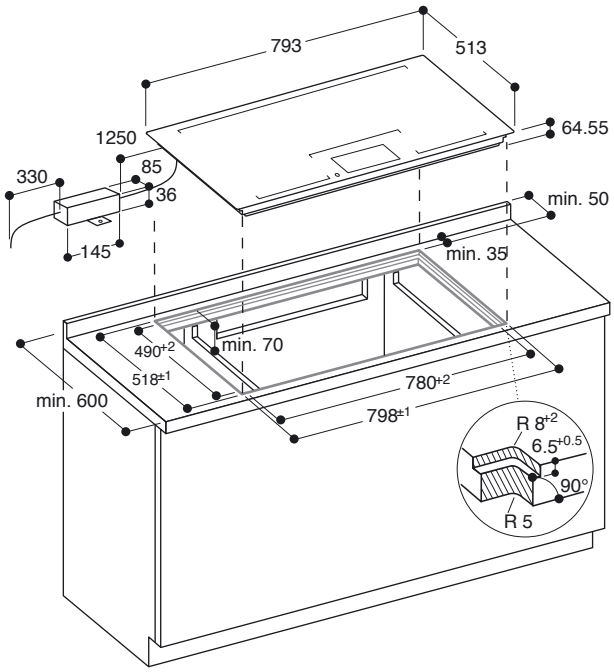

View from above

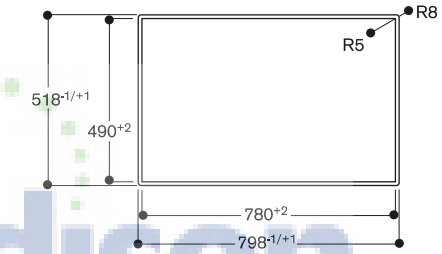

Longitudinal section

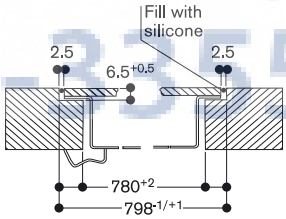

Cross-section

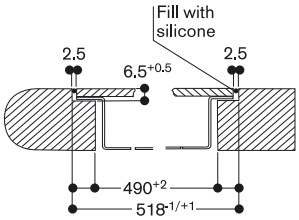

Worktop strength

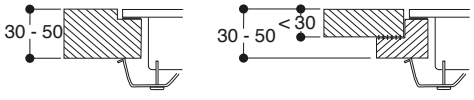

Solid worktop

Thin worktop
with reinforced substructure

Authorized Appliance Authority™
800-570-3355

AjMadison
Your Appliance Authority™
800-570-3355

CX 480 111
Stainless steel frame
Width 80 cm

Installation accessories

VA 420 010
Connection strip for combination with other Vario appliances of the 400 series for surface installation

VA 420 011
Connection strip for combination with other Vario appliances of the 400 series for surface installation with appliance cover/adjustment strip

VA 420 000
Connection strip for combination with other Vario appliances of the 400 series for flush installation

VA 420 001
Connection strip for combination with other Vario appliances of the 400 series for flush installation with appliance cover/adjustment strip

VA 450 800
Stainless steel adjustment strip 80 cm
Required accessory for combination of several Vario appliances of the 400 series with at least one appliance cover to compensate the appliance depth.

Special accessories

GN 232 110
Teppan Yaki made of multi ply material, GN 1/1
For full surface induction hob CX 480.

GN 232 230
Teppan Yaki made of multi ply material, GN 2/3
For full surface induction hob CX 480.

Full surface induction cooktop
CX 480

- One single big cooking surface
- Free positioning of cookware
- All sizes and formats of cookware can be used
- TFT touch display for an intuitive control of all functions
- Max. power output for big cookware of up to 4.4 kW
- Precision crafting of 3 mm stainless steel
- For surface installation with a visible edge or for flush installation
- Can be combined perfectly with other Vario appliances of the 400 series

Cooking zones
One unique cooking surface of 2,800 cm².
Up to 4 items of cookware can be placed simultaneously on the cooktop.

Handling
Easy to use colour graphic TFT touch display with use indications.
Electronic power control in 17 output levels.

Features
Booster function.
Individual pot detection.
Cooking timer for each cooking position.
Timer.
Information key with use indications.
Power management.

Safety
Main switch.
Residual heat indicator.
Child lock.
Display cleaning protection.

Planning notes
Depending on the type of installation (surface-mounted or flush-mounted), the specific definition of the cut-out must be observed.
If installing with the appliance cover VA 440 or adjustement strip VA 450 take into account the additional space required for the depth.
If combining several appliances with at least one appliance cover, the adjustment strip VA 450 is required to compensate for the depth of the appliance without the appliance cover.
If combining several Vario appliances of the 400 series, a connection strip VA 420 must be placed between the appliances. Depending on the type of installation, the corresponding connection strip must be provided.
In the cut-out, the installation system requires the side edge to be at least 10 mm for surface installation and at least 13 mm for flush installation.
Ensure a continuous cut surface of 90°.
The bearing capacity and stability, in the case of thin worktops in particular, must be supported using suitable substructures. Take into account the appliance weight and additional loads.
Additional instructions for flush installation:
Installation is possible in worktops made of stone, synthetics or solid wood. Heat resistance and watertight sealing of the cut edges must be observed. Concerning other materials please consult the worktop manufacturer.
The groove must be continuous and even, so that uniform placing of the appliance on the gasket is ensured. Do not use discontinuous lining.
The joint width may vary due to size tolerances of the combinations and of the worktop cut-out.

Please read additional planning notes on page 116–123.

If installing several appliances in individual cut-outs allow for a division bar of minimum 50 mm between the individual cut-outs.
Operates with magnetic (induction) iron pots and pans only. For an optimal heat distribution, the use of sandwich bottom cookware is recommended.
The wok pan WP 400 001 cannot be used with this appliance.
Immersion depth depending on installation situation 64/67 mm.
Intermediate shelf is required.
Appliance can be snapped into the worktop from above.
Appliance weight: approx. 27 kg.

Please read additional planning notes on page 178.

Connection
Total connected load 7.2 kW.
Connecting cable 1.5 m without plug.

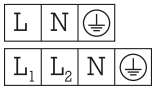

AJMadison
Major Appliance Authority™
800-570-3355

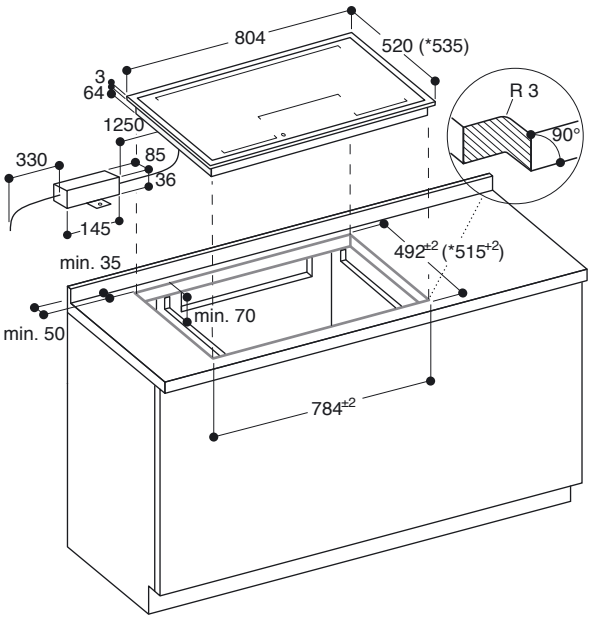

* with spacer batten.
See separate planning notes.

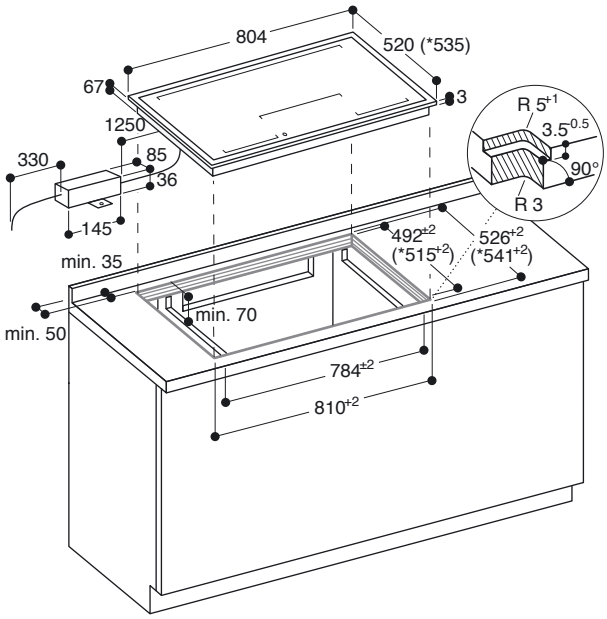

* with spacer batten.
See separate planning notes.

View from above

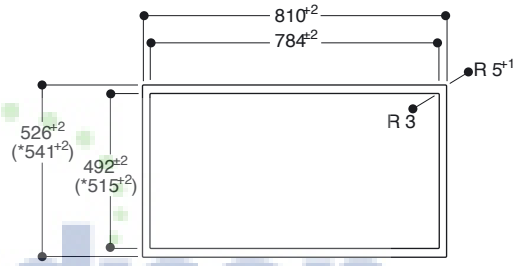

* with spacer batten

Longitudinal section

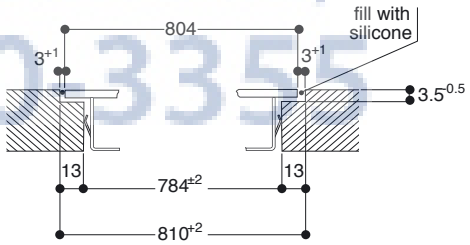

Cross-section

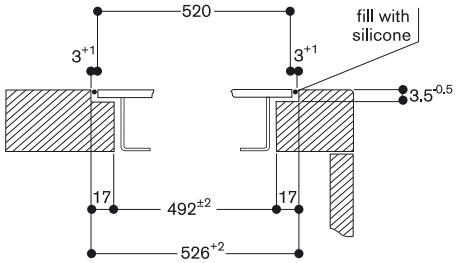

When installing with appliance cover or spacer batten, pay attention to the deeper cut-out and the front and rear groove width.

AjMadison
Your Appliance Authority™
800-570-3355

CI 491 103
Frameless
Width 90 cm

Special accessories

GP 900 002
Stainless steel frying sensor pan
Non-stick coating, for ø 18 cm cooking zone.

GP 900 003
Stainless steel frying sensor pan
Non-stick coating, for ø 21 cm cooking zone.

Induction cooktop
CI 491

- Frameless for flush installation
- Frying sensor function
- Large cooking zone for pots up to ø 32 cm
- Twist-Pad control with removable magnetic knob

Cooking zones
1 induction cooking zone ø 21 cm (2,200 W, with booster 3,300 W), automatically switches to ø 26 cm (2,600 W, with booster 3,400 W) and to ø 32 cm (3,300 W, with booster 4,600 W).
1 induction cooking zone ø 21 cm (2,200 W, with booster 3,300 W).
2 induction cooking zones ø 18 cm (1,800 W, with booster 2,500 W).
1 induction cooking zone ø 15 cm (1,400 W, with booster 1,800 W).

Handling
Twist-Pad control with removable magnetic knob.
Cooking zone marking.
Electronic power control in 17 output levels.

Features
Frying sensor function for ø 18 cm and ø 21 cm cooking zones.
Booster function for each cooking zone.
Super booster function for ø 32 cm cooking zone.
Quick boil timer, with individually adjustable boiling time.
Cooking timer for up to 90 minutes.
Short-term timer.
Memory function.
Options menu.
Power management.

Safety
Main switch.
Operation indicator.
Pot detection.
Individual residual heat indicators.
Child lock.
Safety shut-off.

Planning notes
Operates with magnetic (induction) iron pots and pans only. For an optimal heat distribution, the use of sandwich bottom cookware is recommended.
The wok pan WP 400 001 cannot be used with this appliance.
Immersion depth 56 mm.
Appliance must be fixed from underneath.
Cooktop clamping range: 20 – 40 mm.
Joint width may vary due to dimensional tolerances of the glass ceramic cooktop and the worktop cut-out.
Appliance weight: approx. 18 kg.

Please read additional planning notes on page 178.

Connection
Total connected load 10.8 kW.
Connecting cable 1.5 m without plug.

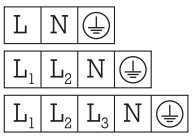

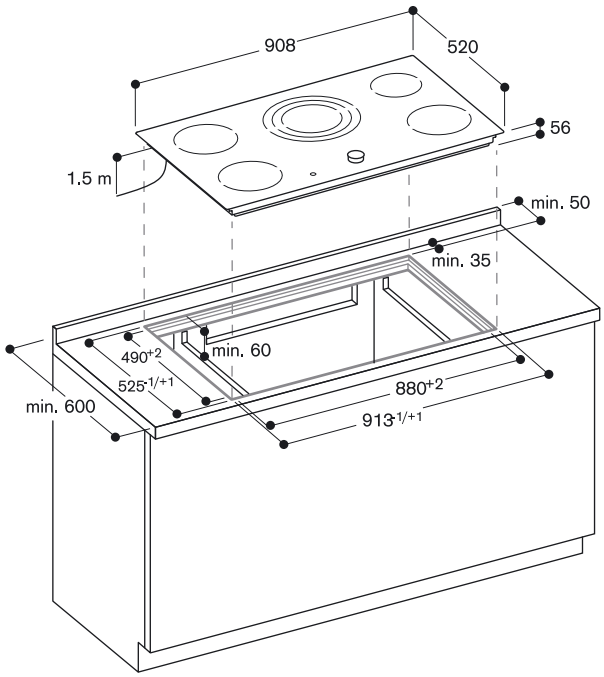

View from above

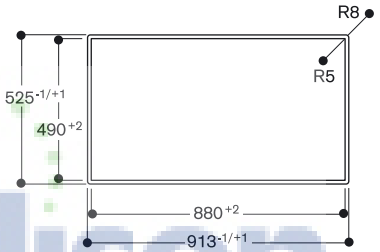

Longitudinal section

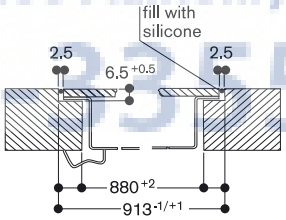

Cross section

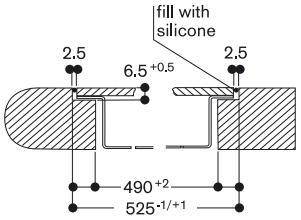

AjMadison
Your Appliance Authority™
800-570-2355

CI 491 113
Stainless steel frame
Width 90 cm

Special accessories

GP 900 002
Stainless steel frying sensor pan
Non-stick coating, for ø 18 cm cooking zone.

GP 900 003
Stainless steel frying sensor pan
Non-stick coating, for ø 21 cm cooking zone.

Induction cooktop
CI 491

- Sturdy stainless steel frame
- Frying sensor function
- Large cooking zone for pots up to ø 32 cm
- Twist-Pad control with removable magnetic knob

Cooking zones
1 induction cooking zone ø 21 cm (2,200 W, with booster 3,300 W), automatically switches to ø 26 cm (2,600 W, with booster 3,400 W) and to ø 32 cm (3,300 W, with booster 4,600 W).
1 induction cooking zone ø 21 cm (2,200 W, with booster 3,300 W).
2 induction cooking zones ø 18 cm (1,800 W, with booster 2,500 W).
1 induction cooking zone ø 15 cm (1,400 W, with booster 1,800 W).

Handling
Twist-Pad control with removable magnetic knob.
Cooking zone marking.
Electronic power control in 17 output levels.

Features
Frying sensor function for ø 18 cm and ø 21 cm cooking zones.
Booster function for each cooking zone.
Super booster function for ø 32 cm cooking zone.
Quick boil timer, with individually adjustable boiling time.
Cooking timer for up to 90 minutes.
Short-term timer.
Memory function.
Options menu.
Power management.

Safety
Main switch.
Operation indicator.
Pot detection.
Individual residual heat indicators.
Child lock.
Safety shut-off.

Planning notes
Operates with magnetic (induction) iron pots and pans only. For an optimal heat distribution, the use of sandwich bottom cookware is recommended.
The wok pan WP 400 001 cannot be used with this appliance.
Immersion depth 55 mm.
Appliance must be fixed from underneath.
Cooktop clamping range: 20 – 40 mm.
Appliance weight: approx. 18 kg.

Please read additional planning notes on page 178.

Connection
Total connected load 10.8 kW.
Connecting cable 1.5 m without plug.

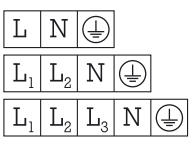

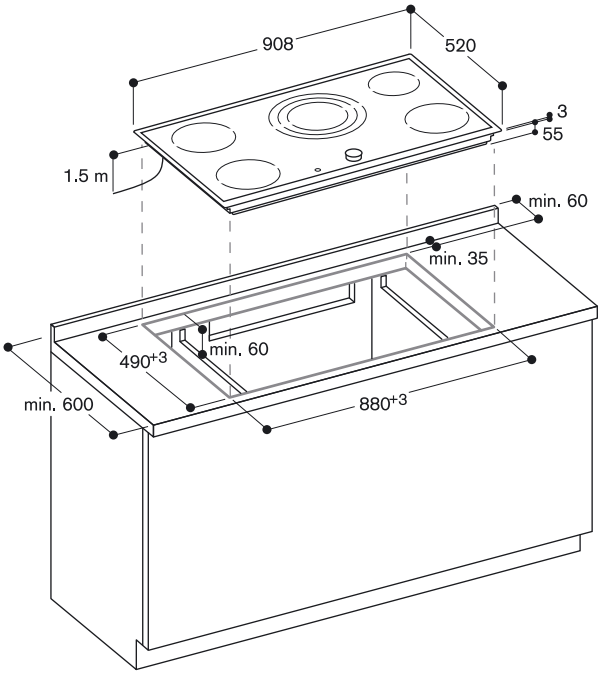

AJ Madison
Your Appliance Authority™
800-570-3355

CI 490 112
Stainless steel frame
Width 90 cm

Special accessories

GP 900 002
Stainless steel frying sensor pan
Non-stick coating, for ø 18 cm cooking zone.

GP 900 003
Stainless steel frying sensor pan
Non-stick coating, for ø 21 cm cooking zone.

Induction cooktop
CI 490

- Sturdy stainless steel frame
- Frying sensor function
- Suitable for 60 cm deep worktops in combination with AT 400 table ventilation
- Twist-Pad control with removable magnetic knob

Cooking zones
1 induction cooking zone ø 21 cm (2,200 W, with booster 3,300 W).
2 induction cooking zones ø 18 cm (1,800 W, with booster 2,500 W).
1 induction cooking zone ø 15 cm (1,400 W, with booster 1,800 W).

Handling
Twist-Pad control with removable magnetic knob.
Cooking zone marking.
Electronic power control in 17 output levels.

Features
Frying sensor function for ø 18 cm and ø 21 cm cooking zones.
Booster function for each cooking zone.
Quick boil timer, with individually adjustable boiling time.
Cooking timer for up to 90 minutes.
Short-term timer.
Memory function.
Options menu.
Power management.

Safety
Main switch.
Operation indicator.
Pot detection.
Individual residual heat indicators.
Child lock.
Safety shut-off.

Planning notes
Operates with magnetic (induction) iron pots and pans only. For an optimal heat distribution, the use of sandwich bottom cookware is recommended.
The wok pan WP 400 001 cannot be used with this appliance.
Immersion depth 55 mm.
Appliance must be fixed from underneath.
Cooktop clamping range: 20 – 40 mm.
Appliance weight: approx. 13 kg.

Please read additional planning notes on page 178.

Connection
Total connected load 7.2 kW.
Connecting cable 1.5 m without plug.

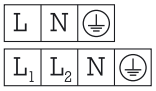

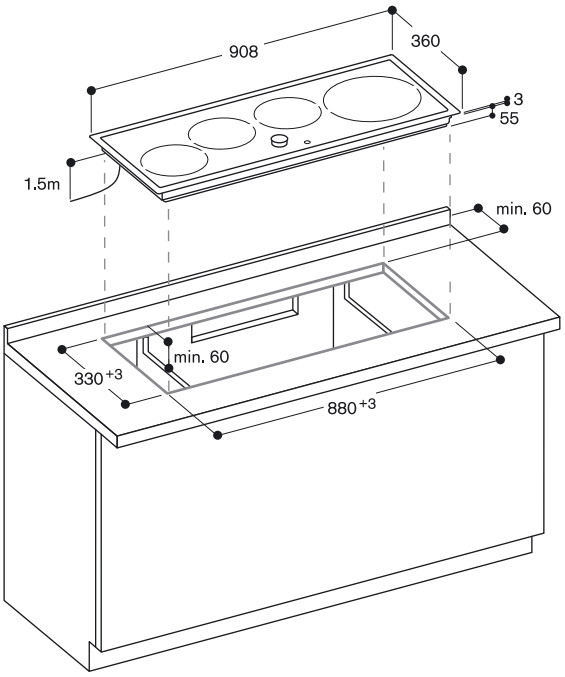

AJMadison
Your Appliance Authority™
800-570-3355

CI 481 102
Frameless
Width 80 cm

Special accessories

GP 900 001
Stainless steel frying sensor pan
Non-stick coating, for ø 15 cm cooking zone.

GP 900 003
Stainless steel frying sensor pan
Non-stick coating, for ø 21 cm cooking zone.

Induction cooktop
CI 481

- Frameless for flush installation
- Frying sensor function
- Twist-Pad control with removable magnetic knob

Cooking zones
1 induction cooking zone ø 28 cm (2,400 W, with booster 3,600 W).
1 induction cooking zone ø 21 cm (2,200 W, with booster 3,300 W).
2 induction cooking zones ø 15 cm (1,400 W, with booster 1,800 W).

Handling
Twist-Pad control with removable magnetic knob.
Cooking zone marking.
Electronic power control in 17 output levels.

Features
Frying sensor function for ø 15 cm and ø 21 cm cooking zones.
Booster function for each cooking zone.
Quick boil timer, with individually adjustable boiling time.
Cooking timer for up to 90 minutes.
Short-term timer.
Memory function.
Options menu.
Power management.

Safety
Main switch.
Operation indicator.
Pot detection.
Individual residual heat indicators.
Child lock.
Safety shut-off.

Planning notes
Operates with magnetic (induction) iron pots and pans only. For an optimal heat distribution, the use of sandwich bottom cookware is recommended.
The wok pan WP 400 001 cannot be used with this appliance.
Immersion depth 56 mm.
Intermediate shelf is recommended.
Appliance must be fixed from underneath.
Cooktop clamping range: 20 – 40 mm.
Joint width may vary due to dimensional tolerances of the glass ceramic cooktop and the worktop cut-out.
Appliance weight: approx. 14 kg.

Please read additional planning notes on page 178.

Connection
Total connected load 7.2 kW.
Connecting cable 1.5 m without plug.

L	N	⏚

L_1	L_2	N	⏚

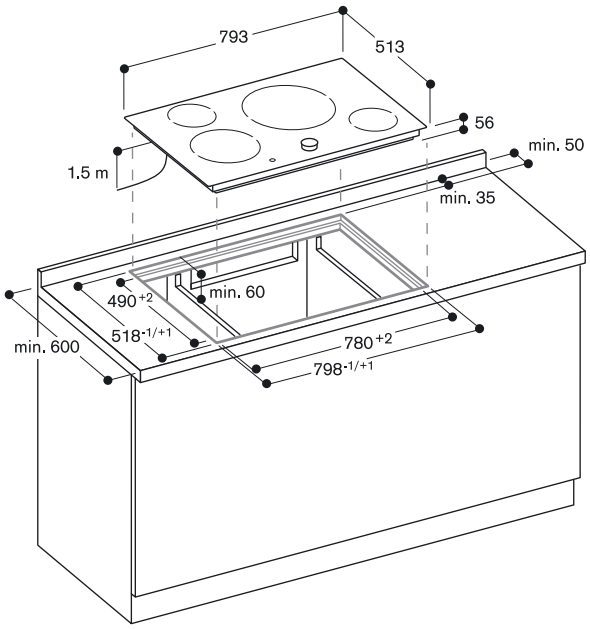

View from above

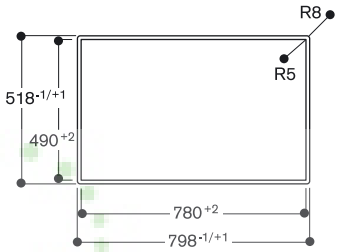

Cross section

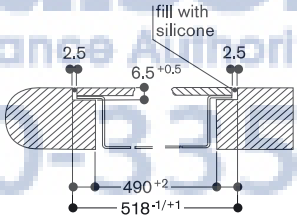

Longitudinal section

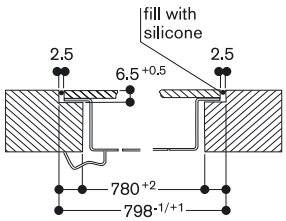

AJ Madison
Best Appliance Authority™
800-570-9355

CI 481 112
Stainless steel frame
Width 80 cm

Special accessories

GP 900 001
Stainless steel frying sensor pan
Non-stick coating, for ø 15 cm cooking zone.

GP 900 003
Stainless steel frying sensor pan
Non-stick coating, for ø 21 cm cooking zone.

Industrie Forum Design Hannover

Induction cooktop
CI 481

- Sturdy stainless steel frame
- Frying sensor function
- Twist-Pad control with removable magnetic knob

Cooking zones
1 induction cooking zone ø 28 cm (2,400 W, with booster 3,600 W).
1 induction cooking zone ø 21 cm (2,200 W, with booster 3,300 W).
2 induction cooking zones ø 15 cm (1,400 W, with booster 1,800 W).

Handling
Twist-Pad control with removable magnetic knob.
Cooking zone marking.
Electronic power control in 17 output levels.

Features
Frying sensor function for ø 15 cm and ø 21 cm cooking zones.
Booster function for each cooking zone.
Quick boil timer, with individually adjustable boiling time.
Cooking timer for up to 90 minutes.
Short-term timer.
Memory function.
Options menu.
Power management.

Safety
Main switch.
Operation indicator.
Pot detection.
Individual residual heat indicators.
Child lock.
Safety shut-off.

Planning notes
Operates with magnetic (induction) iron pots and pans only. For an optimal heat distribution, the use of sandwich bottom cookware is recommended.
The wok pan WP 400 001 cannot be used with this appliance.
Immersion depth 55 mm.
Intermediate shelf is recommended.
Appliance must be fixed from underneath.
Cooktop clamping range: 20 – 40 mm.
Appliance weight: approx. 16 kg.

Please read additional planning notes on page 178.

Connection
Total connected load 7.2 kW.
Connecting cable 1.5 m without plug.

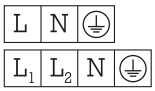

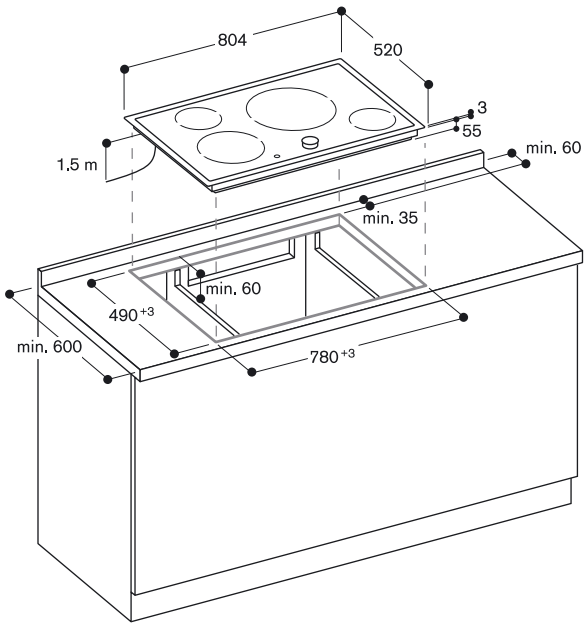

AJMadison
Your Appliance Authority™
800-570-3355

CI 271 102
Frameless
Width 70 cm

Special accessories

GP 900 001
Stainless steel frying sensor pan
Non-stick coating, for ø 15 cm cooking zone.

GP 900 003
Stainless steel frying sensor pan
Non-stick coating, for ø 21 cm cooking zone.

Induction cooktop
CI 271

- Frameless for flush installation
- Frying sensor function
- Oval roasting zone switches on automatically
- Twist-Pad control with removable magnetic knob

Cooking zones
1 induction cooking zone ø 18 cm (1,800 W, with booster 2,500 W), automatically switches to a 18 x 28 cm roasting zone (2,000 W, with booster 2,600 W).
1 induction cooking zone ø 21 cm (2,200 W, with booster 3,300 W).
2 induction cooking zones ø 15 cm (1,400 W, with booster 1,800 W).

Handling
Twist-Pad control with removable magnetic knob.
Cooking zone marking.
Electronic power control in 17 output levels.

Features
Frying sensor function for ø 15 cm and ø 21 cm cooking zones.
Booster function for each cooking zone.
Quick boil timer, with individually adjustable boiling time.
Cooking timer for up to 90 minutes.
Short-term timer.
Memory function.
Options menu.
Power management.

Safety
Main switch.
Operation indicator.
Pot detection.
Individual residual heat indicators.
Child lock.
Safety shut-off.

Planning notes
Operates with magnetic (induction) iron pots and pans only. For an optimal heat distribution, the use of sandwich bottom cookware is recommended.
The wok pan WP 400 001 cannot be used with this appliance.
Immersion depth 56 mm.
Intermediate shelf is recommended.
Appliance must be fixed from underneath.
Cooktop clamping range: 20 – 40 mm.
Joint width may vary due to dimensional tolerances of the glass ceramic cooktop and the worktop cut-out.
Appliance weight: approx. 11 kg.

Please read additional planning notes on page 178.

Connection
Total connected load 7.0 kW.
Connecting cable 1.5 m without plug.

L	N	⏚

L_1	L_2	N	⏚

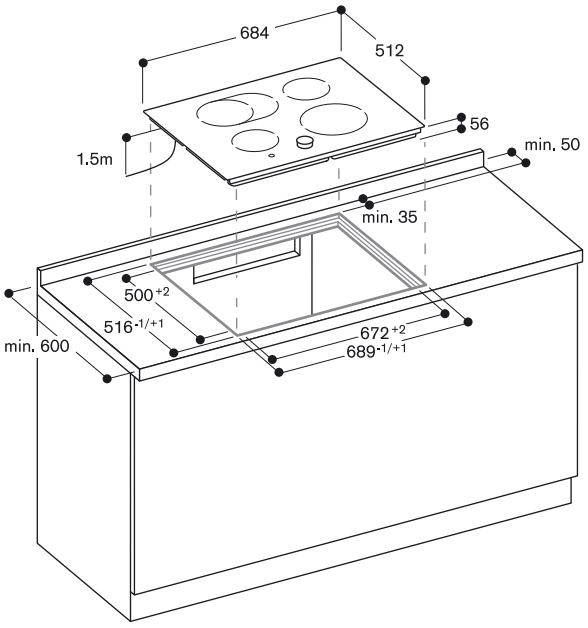

View from above

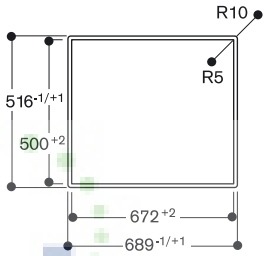

Longitudinal section

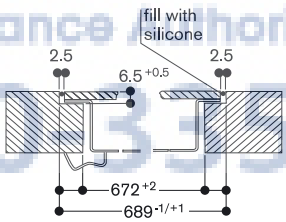

Cross-section

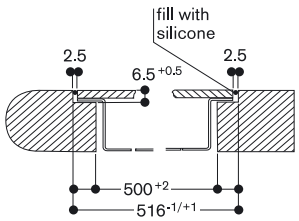

Madison
Your Appliance Authority™
800-570-3355

CI 271 112
Stainless steel frame
Width 70 cm

Special accessories

GP 900 001
Stainless steel frying sensor pan
Non-stick coating, for ø 15 cm cooking zone.

GP 900 003
Stainless steel frying sensor pan
Non-stick coating, for ø 21 cm cooking zone.

Induction cooktop
CI 271

- Sturdy stainless steel frame
- Frying sensor function
- Oval roasting zone switches on automatically
- Twist-Pad control with removable magnetic knob

Cooking zones
1 induction cooking zone ø 18 cm (1,800 W, with booster 2,500 W), automatically switches to a 18 x 28 cm roasting zone (2,000 W, with booster 2,600 W).
1 induction cooking zone ø 21 cm (2,200 W, with booster 3,300 W).
2 induction cooking zones ø 15 cm (1,400 W, with booster 1,800 W).

Handling
Twist-Pad control with removable magnetic knob.
Cooking zone marking.
Electronic power control in 17 output levels.

Features
Frying sensor function for ø 15 cm and ø 21 cm cooking zones.
Booster function for each cooking zone.
Quick boil timer, with individually adjustable boiling time.
Cooking timer for up to 90 minutes.
Short-term timer.
Memory function.
Options menu.
Power management.

Safety
Main switch.
Operation indicator.
Pot detection.
Individual residual heat indicators.
Child lock.
Safety shut-off.

Planning notes
Operates with magnetic (induction) iron pots and pans only. For an optimal heat distribution, the use of sandwich bottom cookware is recommended.
The wok pan WP 400 001 cannot be used with this appliance.
Immersion depth 55 mm.
Intermediate shelf is recommended.
Appliance must be fixed from underneath.
Cooktop clamping range: 20 – 40 mm.
Appliance weight: approx. 14 kg.

Please read additional planning notes on page 178.

Connection
Total connected load 7.0 kW.
Connecting cable 1.5 m without plug.

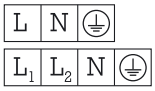

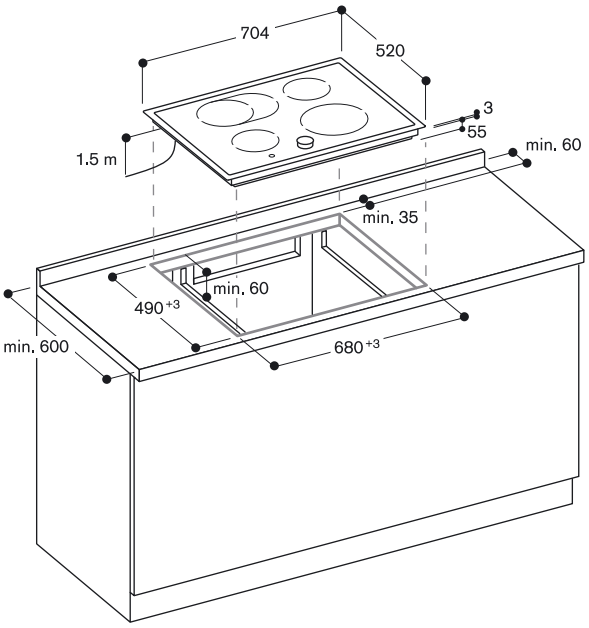

AJMadison
Your Appliance Authority™
800-570-3355

CI 262 102
Frameless
Width 60 cm

Special accessories

GP 900 001
Stainless steel frying sensor pan
Non-stick coating, for ø 15 cm cooking zone.

GP 900 003
Stainless steel frying sensor pan
Non-stick coating, for ø 21 cm cooking zone.

Induction cooktop
CI 262

- Frameless for flush installation
- Frying sensor function
- Super booster function for the 28 cm cooking zone with 4.4 kW
- Twist-Pad control with removable magnetic knob

Cooking zones
1 induction cooking zone ø 18 cm (1,800 W, with booster 2,500 W), automatically switches to ø 28 cm (2,800 W, with booster 4,400 W).
1 induction cooking zone ø 21 cm (2,200 W, with booster 3,300 W).
1 induction cooking zone ø 15 cm (1,400 W, with booster 1,800 W).

Handling
Twist-Pad control with removable magnetic knob.
Cooking zone marking.
Electronic power control in 17 output levels.

Features
Frying sensor function for ø 15 cm and ø 21 cm cooking zones.
Booster function for each cooking zone.
Super booster function for ø 28 cm cooking zone.
Quick boil timer, with individually adjustable boiling time.
Cooking timer for up to 90 minutes.
Short-term timer.
Memory function.
Options menu.
Power management.

Safety
Main switch.
Operation indicator.
Pot detection.
Individual residual heat indicators.
Child lock.
Safety shut-off.

Planning notes
Operates with magnetic (induction) iron pots and pans only. For an optimal heat distribution, the use of sandwich bottom cookware is recommended.
The wok pan WP 400 001 cannot be used with this appliance.
Immersion depth 56 mm.
Intermediate shelf is recommended.
Appliance must be fixed from underneath.
Cooktop clamping range: 20 – 40 mm.
Joint width may vary due to dimensional tolerances of the glass ceramic cooktop and the worktop cut-out.
Appliance weight: approx. 12 kg.

Please read additional planning notes on page 178.

Connection
Total connected load 7.2 kW.
Connecting cable 1.5 m without plug.

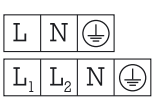

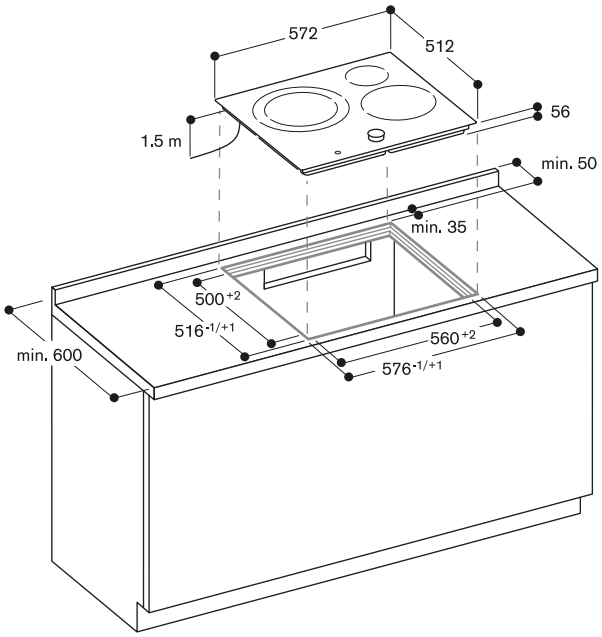

View from above

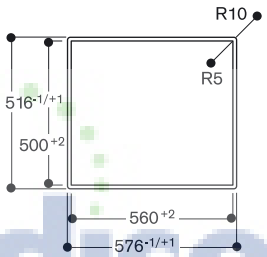

Cross section

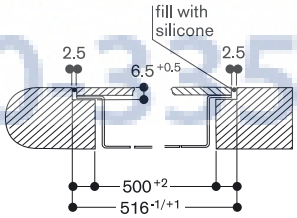

Longitudinal section

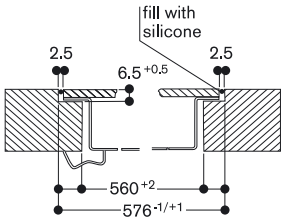

AiMadison Your Appliance Authority™ 800-570-3355

CI 262 112
Stainless steel frame
Width 60 cm

Special accessories

GP 900 001
Stainless steel frying sensor pan
Non-stick coating, for ø 15 cm cooking zone.

GP 900 003
Stainless steel frying sensor pan
Non-stick coating, for ø 21 cm cooking zone.

Induction cooktop
CI 262

- Sturdy stainless steel frame
- Frying sensor function
- Super booster function for the 28 cm cooking zone with 4.4 kW
- Twist-Pad control with removable magnetic knob

Cooking zones
1 induction cooking zone ø 18 cm (1,800 W, with booster 2,500 W), automatically switches to ø 28 cm (2,800 W, with booster 4,400 W).
1 induction cooking zone ø 21 cm (2,200 W, with booster 3,300 W).
1 induction cooking zone ø 15 cm (1,400 W, with booster 1,800 W).

Handling
Twist-Pad control with removable magnetic knob.
Cooking zone marking.
Electronic power control in 17 output levels.

Features
Frying sensor function for ø 15 cm and ø 21 cm cooking zones.
Booster function for each cooking zone.
Super booster function for ø 28 cm cooking zone.
Quick boil timer, with individually adjustable boiling time.
Cooking timer for up to 90 minutes.
Short-term timer.
Memory function.
Options menu.
Power management.

Safety
Main switch.
Operation indicator.
Pot detection.
Individual residual heat indicators.
Child lock.
Safety shut-off.

Planning notes
Operates with magnetic (induction) iron pots and pans only. For an optimal heat distribution, the use of sandwich bottom cookware is recommended.
The wok pan WP 400 001 cannot be used with this appliance.
Immersion depth 55 mm.
Intermediate shelf is recommended.
Appliance must be fixed from underneath.
Cooktop clamping range: 20 – 40 mm.
Appliance weight: approx. 13 kg.

Please read additional planning notes on page 178.

Connection
Total connected load 7.2 kW.
Connecting cable 1.5 m without plug.

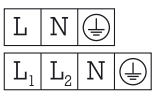

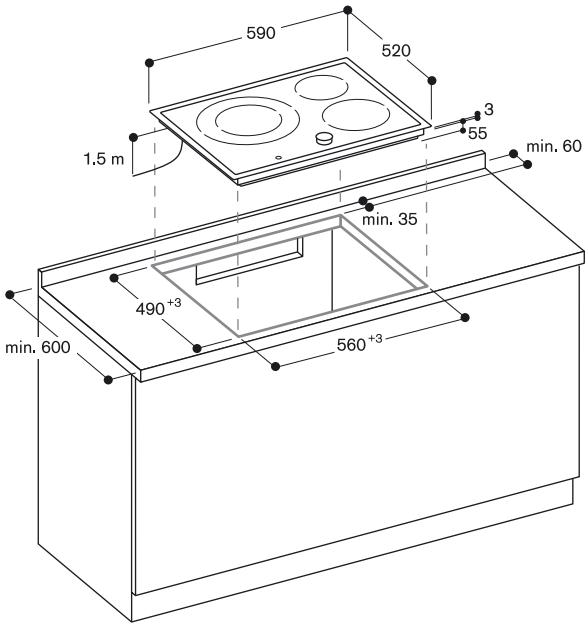

AiMadison
Your Appliance Authority™
800-570-3355

CI 261 102
Frameless
Width 60 cm

Special accessories

GP 900 001
Stainless steel frying sensor pan
Non-stick coating, for ø 15 cm cooking zone.

GP 900 003
Stainless steel frying sensor pan
Non-stick coating, for ø 21 cm cooking zone.

Induction cooktop
CI 261

- Frameless for flush installation
- Oval roasting zone switches on automatically
- Frying sensor function
- Twist-Pad control with removable magnetic knob

Cooking zones
1 induction cooking zone ø 18 cm (1,800 W, with booster 2,500 W), automatically switches to a 18 x 28 cm roasting zone (2,000 W, with booster 2,600 W).
1 induction cooking zone ø 21 cm (2,200 W, with booster 3,300 W).
2 induction cooking zones ø 15 cm (1,400 W, with booster 1,800 W).

Handling
Twist-Pad control with removable magnetic knob.
Cooking zone marking.
Electronic power control in 17 output levels.

Features
Frying sensor function for ø 15 cm and ø 21 cm cooking zones.
Booster function for each cooking zone.
Quick boil timer, with individually adjustable boiling time.
Cooking timer for up to 90 minutes.
Short-term timer.
Memory function.
Options menu.
Power management.

Safety
Main switch.
Operation indicator.
Pot detection.
Individual residual heat indicators.
Child lock.
Safety shut-off.

Planning notes
Operates with magnetic (induction) iron pots and pans only. For an optimal heat distribution, the use of sandwich bottom cookware is recommended.
The wok pan WP 400 001 cannot be used with this appliance.
Immersion depth 56 mm.
Intermediate shelf is recommended.
Appliance must be fixed from underneath.
Cooktop clamping range: 20 – 40 mm.
Joint width may vary due to dimensional tolerances of the glass ceramic cooktop and the worktop cut-out.
Appliance weight: approx. 12 kg.

Please read additional planning notes on page 178.

Connection
Total connected load 7.0 kW.
Connecting cable 1.5 m without plug.

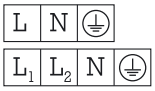

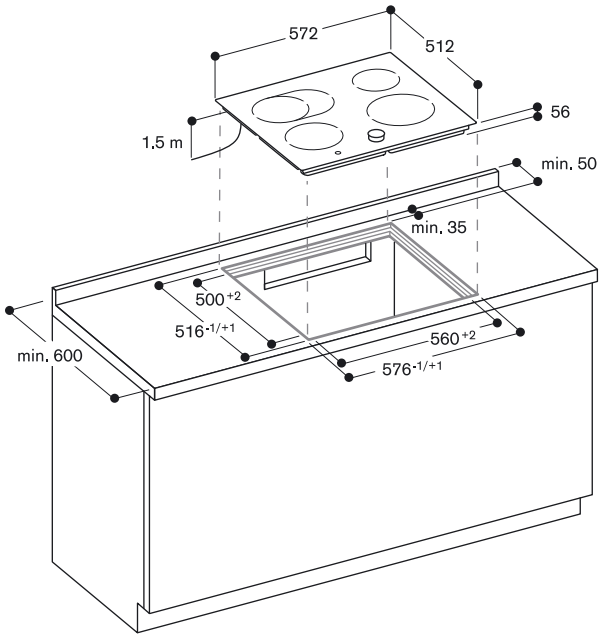

View from above

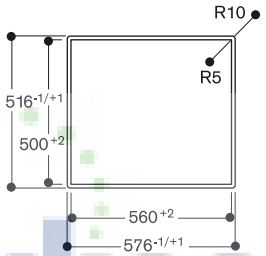

Cross section

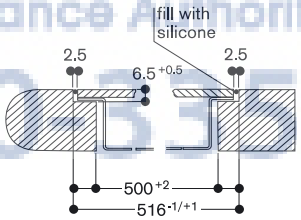

Longitudinal section

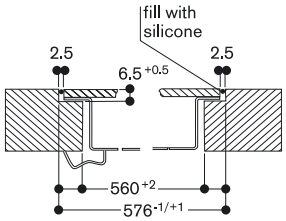

Madison
Your Appliance Authority™
800-570-3535

CI 261 112
Stainless steel frame
Width 60 cm

Special accessories

GP 900 001
Stainless steel frying sensor pan
Non-stick coating, for ø 15 cm cooking zone.

GP 900 003
Stainless steel frying sensor pan
Non-stick coating, for ø 21 cm cooking zone.

Induction cooktop
CI 261

- Sturdy stainless steel frame
- Frying sensor function
- Oval roasting zone switches on automatically
- Twist-Pad control with removable magnetic knob

Cooking zones
1 induction cooking zone ø 18 cm (1,800 W, with booster 2,500 W), automatically switches to a 18 x 28 cm roasting zone (2,000 W, with booster 2,600 W).
1 induction cooking zone ø 21 cm (2,200 W, with booster 3,300 W).
2 induction cooking zones ø 15 cm (1,400 W, with booster 1,800 W).

Handling
Twist-Pad control with removable magnetic knob.
Cooking zone marking.
Electronic power control in 17 output levels.

Features
Frying sensor function for ø 15 cm and ø 21 cm cooking zones.
Booster function for each cooking zone.
Quick boil timer, with individually adjustable boiling time.
Cooking timer for up to 90 minutes.
Short-term timer.
Memory function.
Options menu.
Power management.

Safety
Main switch.
Operation indicator.
Pot detection.
Individual residual heat indicators.
Child lock.
Safety shut-off.

Planning notes
Operates with magnetic (induction) iron pots and pans only. For an optimal heat distribution, the use of sandwich bottom cookware is recommended.
The wok pan WP 400 001 cannot be used with this appliance.
Immersion depth 55 mm.
Intermediate shelf is recommended.
Appliance must be fixed from underneath.
Cooktop clamping range: 20 – 40 mm.
Appliance weight: approx. 12 kg.

Please read additional planning notes on page 178.

Connection
Total connected load 7.0 kW.
Connecting cable 1.5 m without plug.

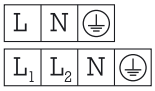

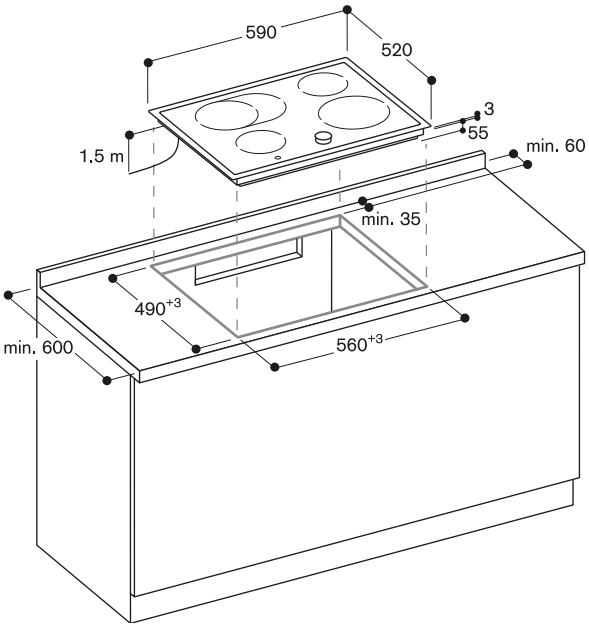

AJMadison
Your Appliance Authority™
800-570-3355

CI 263 112
Stainless steel frame
Width 60 cm

Special accessories

GP 900 001
Stainless steel frying sensor pan
Non-stick coating, for ø 15 cm cooking zone.

GP 900 003
Stainless steel frying sensor pan
Non-stick coating, for ø 21 cm cooking zone.

Induction cooktop
CI 263

- Sturdy stainless steel frame
- Frying sensor function
- Oval roasting zone switches on automatically
- Sensor control with direct selection of output level

Cooking zones
1 induction cooking zone ø 18 cm (1,800 W, with booster 2,500 W), automatically switches to a 18 x 28 cm roasting zone (2,000 W, with booster 2,600 W).
1 induction cooking zone ø 21 cm (2,200 W, with booster 3,300 W).
2 induction cooking zones ø 15 cm (1,400 W, with booster 1,800 W).

Handling
Sensor control with direct selection of ouput level.
Cooking zone marking.
Electronic power control in 9 output levels.

Features
Frying sensor function for ø 15 cm and ø 21 cm cooking zones.
Booster function for each cooking zone.
Quick boil timer, with individually adjustable boiling time.
Cooking timer for up to 90 minutes.
Short-term timer.
Memory function.
Options menu.
Power management.

Safety
Main switch.
Operation indicator.
Pot detection.
Individual residual heat indicators.
Child lock.
Safety shut-off.

Planning notes
Operates with magnetic (induction) iron pots and pans only. For an optimal heat distribution, the use of sandwich bottom cookware is recommended.
The wok pan WP 400 001 cannot be used with this appliance.
Immersion depth 55 mm.
Intermediate shelf is recommended.
Appliance must be fixed from underneath.
Cooktop clamping range: 20 – 40 mm.
Appliance weight: approx. 12 kg.

Please read additional planning notes on page 178.

Connection
Total connected load 7.0 kW.
Connecting cable 1.5 m without plug.

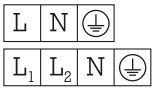

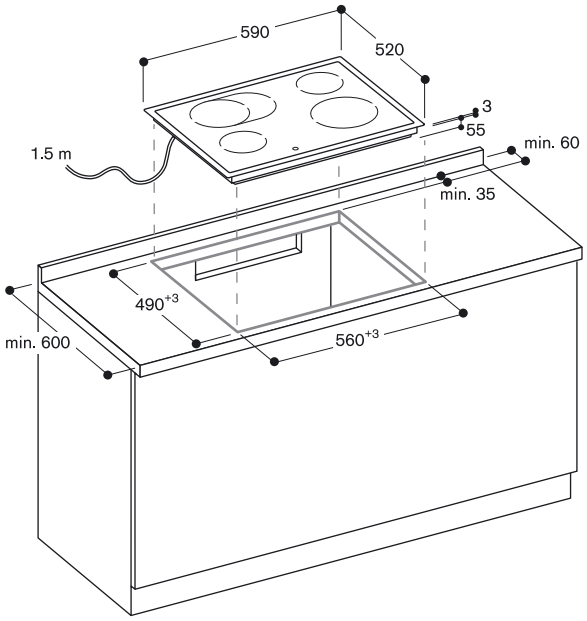

Madison
Your Appliance Authority™
800-570-3355

Installation notes for induction cooktops.

Applies to CI 26./27./48./49., CX 48., VI 461/481/491 and VI 26./27.

Intake air ducting

Induction cooktops have a cooling fan to protect the appliance's electronics from overheating. In the case of insufficient air circulation in the cabinet, the appliance's output will be reduced to prevent electronic damage.

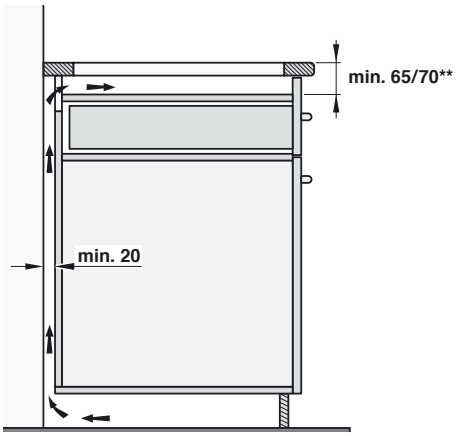

A Air duct behind a cabinet or built-in oven

An open cross-section of a minimum of 20 mm is needed across the full width and full height of the cabinet. Cabinets with a closed bottom also need a respective cross-section in the air duct area.

B intake through the cabinet's back wall

In the cabinet's back wall, plan a recess of at least 45 mm in height from the worktop's bottom edge.

The minimum width is
- 550 mm for a Vario cooktop or a 60-cm to 80-cm induction cooktop
- 820 mm for a 90-cm induction cooktop

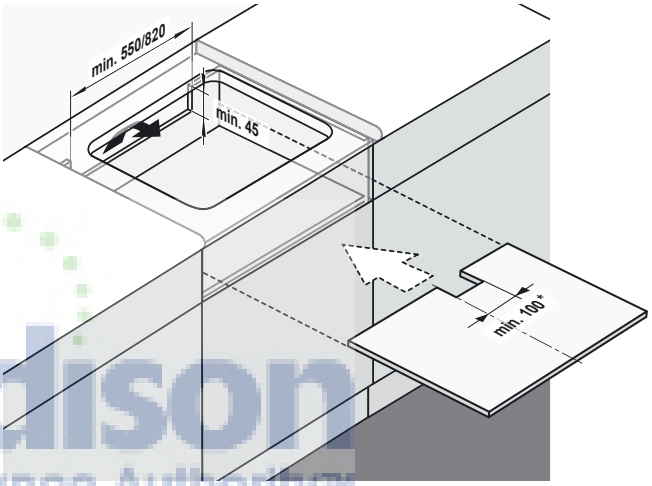

Intermediate shelf

To prevent the content of drawers underneath the cooktop from heating up, the use of an intermediate shelf is recommend, except for with 90 cm cooktops.
Width of cut-out at least
- 100 mm for a 60 to 80 cm induction cooktop

* does not apply to 90 cm cooktops
** min. 65 mm for cooktops with frame as well as VI 461/481/491 for surface-mounted installation and min. 70 mm for cooktops without frame, for CX 480 with frame as well as for VI 461/481/491 for flush-mounted installation.

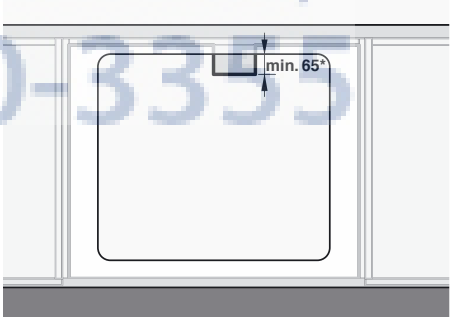

Combination with other appliances

Installation above dishwasher or washing machine is not permitted.

Combination with AT 400/AL 400

In addition to the measures mentioned above, the following unobstructed cross sections must be planned between of the cabinet and the AT 400/AL 400 to allow for proper intake and exhaust air circulation for the induction cooktop.

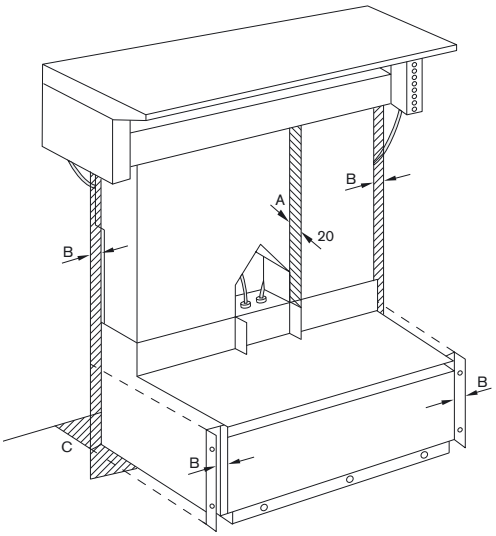

A In front of the air duct

20 mm distance between the back side of drawers, an oven or the cabinet's interior wall.

B Adjacent to the air duct

The resulting gap between the air duct and the cabinet's side wall needs to remain open.

C At the housing's rear edge

The resulting cross section between the housing and the wall, as well as between the housing and the floor, must remain open.

AirMadison Your Appliance Authority™ 800-570-3355

CE 491 102
Frameless
Width 90 cm

Included in the price
1 glass scraper

Special accessories
BT 481 000
Cast roaster made of aluminium casting
Non-stick cover can also be used as fish or grill pan.
For cooking zone 18 x 41.5 cm.

GP 900 003
Stainless steel frying sensor pan
Non-stick coating, for ø 21 cm cooking zone.

Glass ceramic cooktop
CE 491

- Frameless for flush installation
- Frying sensor function
- Three-ring cooking zone up to 27 cm
- Large roasting zone for BT 481
- Twist-Pad control with removable magnetic knob

Cooking zones
2 Super-Quick cooking zones ø 18 cm (1,800 W); together they convert to 18 x 41.5 cm (4,400 W) roasting zone.
1 Super-Quick cooking zone ø 12 cm (750 W), converts to ø 21 cm (2,200 W) cooking zone.
1 Super-Quick cooking zone ø 14.5 cm (1,050 W), converts to ø 21 cm (2,200 W) or ø 27 cm (3,080 W) cooking zone.
1 Super-Quick cooking zone ø 14.5 cm (1,200 W).

Handling
Twist-Pad control with removable magnetic knob.
Cooking zone marking.
Electronic power control in 17 output levels.

Features
Frying sensor function for ø 21 cm cooking zone.
Quick boil timer, with individually adjustable boiling time.
Cooking timer for up to 90 minutes.
Short-term timer.
Memory function.
Options menu.

Safety
Main switch.
Operation indicator.
Individual residual heat indicators.
Child lock.
Safety shut-off.

Planning notes
Immersion depth 44 mm, depth at plug socket 65 mm.
The cooktop must not be installed lower than the top edge of the worktop.
Under the plug socket, a 10 mm clearance must be observed from side panels or from intermediate shelf.
The cooktop must be freely accessible from underneath to be able to detach the cooktop´s base in a downward direction.
Installation possible in a 60 cm wide lower cabinet.
Appliance must be fixed from underneath.
Cooktop clamping range: 20 – 50 mm.
Joint width may vary due to dimensional tolerances of the glass ceramic cooktop and the worktop cut-out.
Appliance weight: approx. 13 kg.

Connection
Total connected load 10.9 kW.
Plan a connection cable.

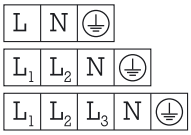

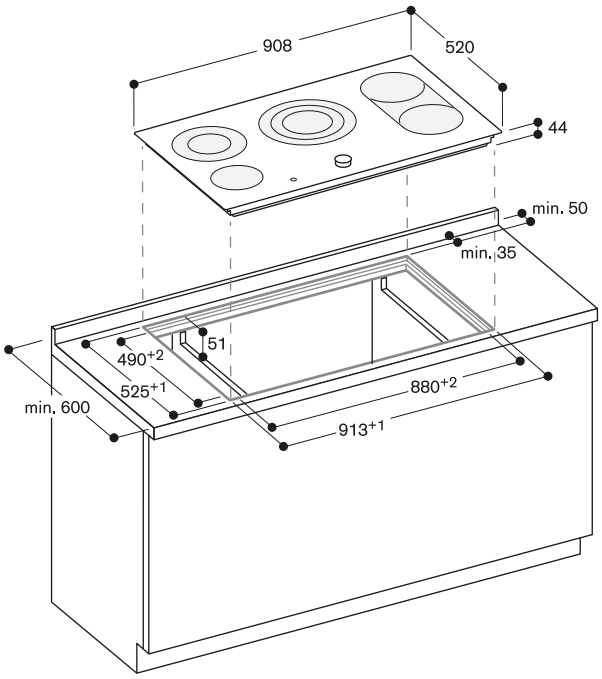

Recessed depth in the vicinity of the electrical connection box 65 mm.

View from above

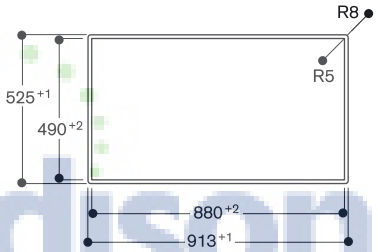

Longitudinal section

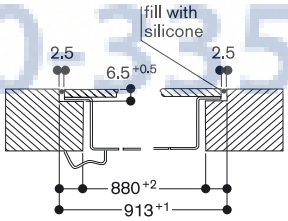

Cross section

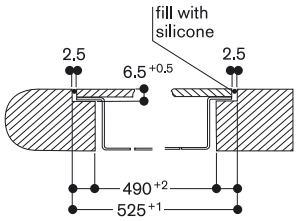

AjMadison
Your Appliance Authority™
800-570-3255

CE 491 112
Stainless steel frame
Width 90 cm

Included in the price
1 glass scraper

Special accessories
BT 481 000
Cast roaster made of aluminium casting
Non-stick cover can also be used as fish or grill pan.
For cooking zone 18 x 41.5 cm.

GP 900 003
Stainless steel frying sensor pan
Non-stick coating, for ø 21 cm cooking zone.

Glass ceramic cooktop
CE 491

- Sturdy stainless steel frame
- Frying sensor function
- Three-ring cooking zone up to 27 cm
- Large roasting zone for BT 481
- Twist-Pad control with removable magnetic knob

Cooking zones
2 Super-Quick cooking zones ø 18 cm (1,800 W); together they convert to 18 x 41.5 cm (4,400 W) roasting zone.
1 Super-Quick cooking zone ø 12 cm (750 W), converts to ø 21 cm (2,200 W) cooking zone.
1 Super-Quick cooking zone ø 14.5 cm (1,050 W), converts to ø 21 cm (2,200 W) or ø 27 cm (3,080 W) cooking zone.
1 Super-Quick cooking zone ø 14.5 cm (1,200 W).

Handling
Twist-Pad control with removable magnetic knob.
Cooking zone marking.
Electronic power control in 17 output levels.

Features
Frying sensor function for ø 21 cm cooking zone.
Quick boil timer, with individually adjustable boiling time.
Cooking timer for up to 90 minutes.
Short-term timer.
Memory function.
Options menu.

Safety
Main switch.
Operation indicator.
Individual residual heat indicators.
Child lock.
Safety shut-off.

Planning notes
Appliance depth 43 mm, depth at plug socket 60 mm.
Under the plug socket, a 10 mm clearance must be observed from side panels or from intermediate shelf.
The cooktop must be freely accessible from underneath to be able to detach the cooktop´s base in a downward direction.
Installation possible in a 60 cm wide lower cabinet.
Appliance must be fixed from underneath.
Cooktop clamping range: 20 – 50 mm.
Appliance weight: approx. 13 kg.

Connection
Total connected load 10.9 kW.
Plan a connection cable.

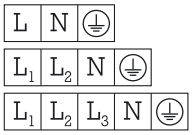

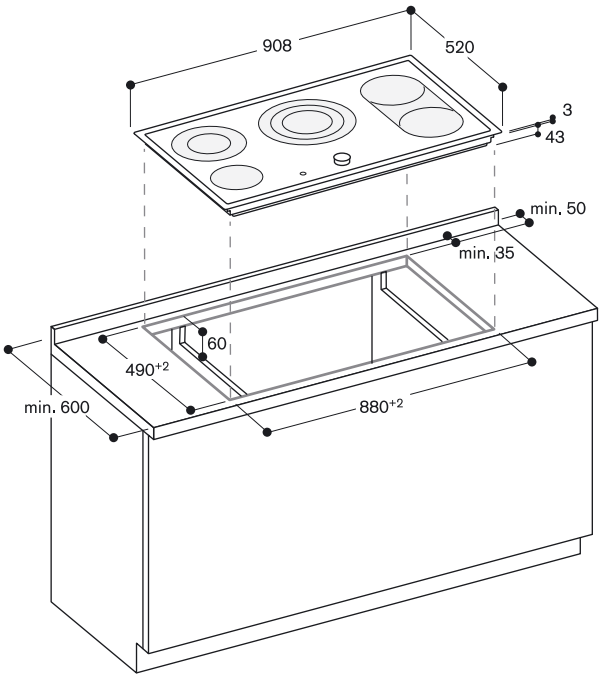

Recessed depth in the vicinity of the electrical connection box 60 mm.

AjMadison
Your Appliance Authority™
800-570-3355

CE 481 102
Frameless
Width 80 cm

Included in the price
1 glass scraper

Special accessories
BT 481 000
Cast roaster made of aluminium casting
Non-stick cover can also be used as fish or grill pan.
For cooking zone 18 x 41.5 cm.

GP 900 003
Stainless steel frying sensor pan
Non-stick coating, for ø 21 cm cooking zone.

Glass ceramic cooktop
CE 481

- Frameless for flush installation
- Frying sensor function
- Three-ring cooking zone up to 27 cm
- Large roasting zone for BT 481
- Twist-Pad control with removable magnetic knob

Cooking zones
2 Super-Quick cooking zones ø 18 cm (1,800 W); together they convert to 18 x 41.5 cm (4,400 W) roasting zone.
1 Super-Quick cooking zone ø 14.5 cm (1,050 W), converts to ø 21 cm (2,200 W) or ø 27 cm (3,080 W) cooking zone.
1 Super-Quick cooking zone ø 14.5 cm (1,200 W).

Handling
Twist-Pad control with removable magnetic knob.
Cooking zone marking.
Electronic power control in 17 output levels.

Features
Frying sensor function for ø 21 cm cooking zone.
Quick boil timer, with individually adjustable boiling time.
Cooking timer for up to 90 minutes.
Short-term timer.
Memory function.
Options menu.

Safety
Main switch.
Operation indicator.
Individual residual heat indicators.
Child lock.
Safety shut-off.

Planning notes
Immersion depth 44 mm, depth at plug socket 65 mm.
The cooktop must not be installed lower than the top edge of the worktop.
Under the plug socket, a 10 mm clearance must be observed from side panels or from intermediate shelf.
The cooktop must be freely accessible from underneath to be able to detach the cooktop´s base in a downward direction.
Installation possible in a 60 cm wide lower cabinet.
Appliance must be fixed from underneath.
Cooktop clamping range: 20 – 50 mm.
Joint width may vary due to dimensional tolerances of the glass ceramic cooktop and the worktop cut-out.
Appliance weight: approx. 11 kg.

Connection
Total connected load 8.7 kW.
Plan a connection cable.

L_1	L_2	N	⏚

L_1	L_2	L_3	N	⏚

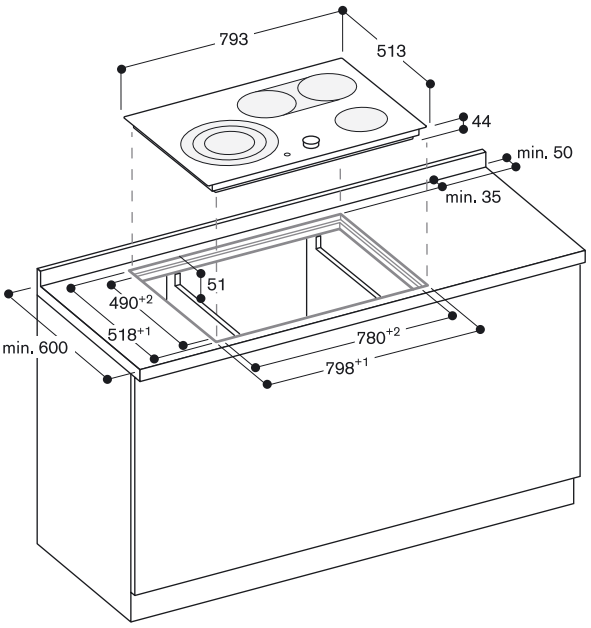

Recessed depth in the vicinity of the electrical connection box 65 mm.

View from above

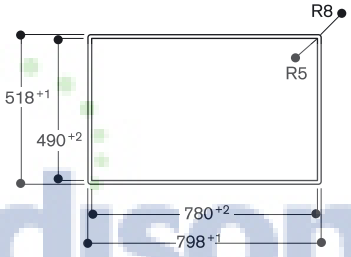

Longitudinal section

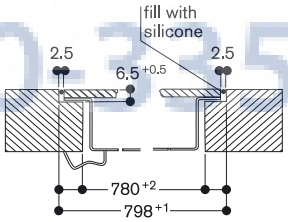

Cross section

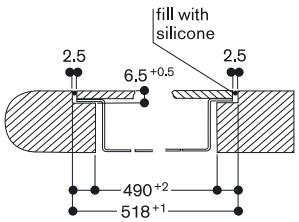

AiMadison Your Appliance Authority™ 800-570-3355

CE 481 112
Stainless steel frame
Width 80 cm

Included in the price
1 glass scraper

Special accessories
BT 481 000
Cast roaster made of aluminium casting
Non-stick cover can also be used as fish or grill pan.
For cooking zone 18 x 41.5 cm.

GP 900 003
Stainless steel frying sensor pan
Non-stick coating, for ø 21 cm cooking zone.

Glass ceramic cooktop
CE 481

- Sturdy stainless steel frame
- Frying sensor function
- Three-ring cooking zone up to 27 cm
- Large roasting zone for BT 481
- Twist-Pad control with removable magnetic knob

Cooking zones
2 Super-Quick cooking zones ø 18 cm (1,800 W); together they convert to 18 x 41.5 cm (4,400 W) roasting zone.
1 Super-Quick cooking zone ø 14.5 cm (1,050 W), converts to ø 21 cm (2,200 W) or ø 27 cm (3,080 W) cooking zone.
1 Super-Quick cooking zone ø 14.5 cm (1,200 W).

Handling
Twist-Pad control with removable magnetic knob.
Cooking zone marking.
Electronic power control in 17 output levels.

Features
Frying sensor function for ø 21 cm cooking zone.
Quick boil timer, with individually adjustable boiling time.
Cooking timer for up to 90 minutes.
Short-term timer.
Memory function.
Options menu.

Safety
Main switch.
Operation indicator.
Individual residual heat indicators.
Child lock.
Safety shut-off.

Planning notes
Appliance depth 43 mm, depth at plug socket 60 mm.
Under the plug socket, a 10 mm clearance must be observed from side panels or from intermediate shelf.
The cooktop must be freely accessible from underneath to be able to detach the cooktop´s base in a downward direction.
Installation possible in a 60 cm wide lower cabinet.
Appliance must be fixed from underneath.
Cooktop clamping range: 20 – 50 mm.
Appliance weight: approx. 12 kg.

Connection
Total connected load 8.7 kW.
Plan a connection cable.

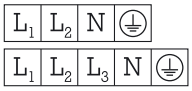

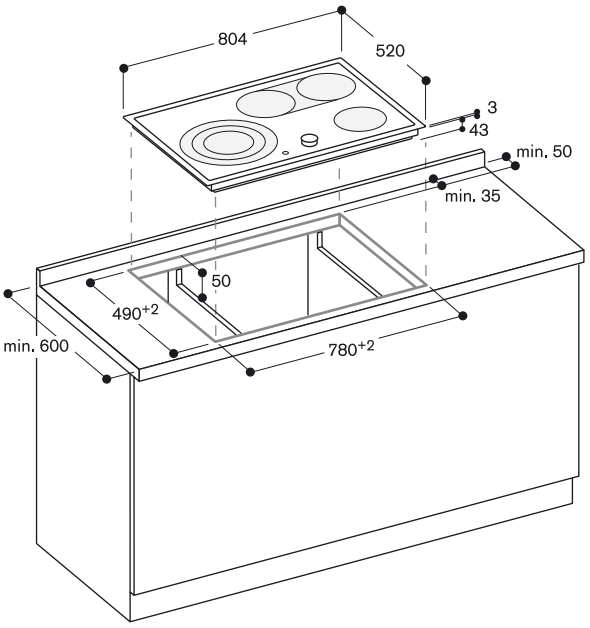

Recessed depth in the vicinity of the electrical connection box 60 mm.

AJMadison
Your Appliance Authority™
800-570-3355

CE 273 112
Stainless steel frame
Width 70 cm

Included in the price
1 glass scraper

Glass ceramic cooktop
CE 273

- Sturdy stainless steel frame
- Sensor control with direct selection of output level

Cooking zones
1 Super-Quick cooking zone ø 17 cm (1,800 W), switches to 17 x 26,5 cm (2,600 W) roasting zone.
1 Super-Quick cooking zone ø 12 cm (750 W), converts to ø 21 cm (2,200 W) cooking zone.
1 Super-Quick cooking zone ø 18 cm (1,800 W).
1 Super-Quick cooking zone ø 14.5 cm (1,200 W).

Handling
Sensor control with direct selection of ouput level.
Cooking zone marking.
Electronic power control in 9 output levels.

Features
Quick boil timer, with individually adjustable boiling time.
Cooking timer for up to 90 minutes.
Short-term timer.
Memory function.
Options menu.

Safety
Main switch.
Operation indicator.
Individual residual heat indicators.
Child lock.
Safety shut-off.

Planning notes
Appliance depth 43 mm, depth at plug socket 60 mm.
Under the plug socket, a 10 mm clearance must be observed from side panels or from intermediate shelf.
The cooktop must be freely accessible from underneath to be able to detach the cooktop´s base in a downward direction.
Installation possible in a 60 cm wide lower cabinet.
Appliance must be fixed from underneath.
Cooktop clamping range: 20 – 50 mm.
Appliance weight: approx. 11 kg.

Connection
Total connected load 7.8 kW.
Plan a connection cable.

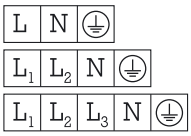

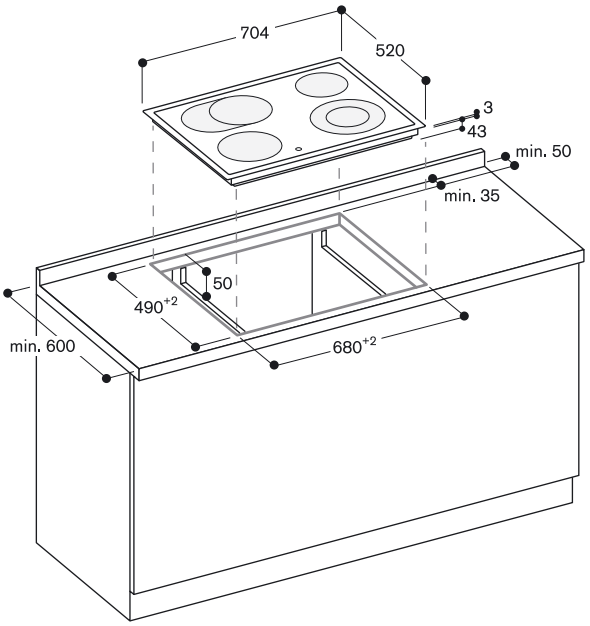

Recessed depth in the vicinity of the electrical connection box 60 mm.

Madison
Home Appliance Authority™
800-570-3355

CE 261 112
Stainless steel frame
Width 60 cm

Included in the price
1 glass scraper

Glass ceramic cooktop
CE 261

- Sturdy stainless steel frame
- Sensor control with direct selection of output level

Cooking zones
1 Super-Quick cooking zone ø 17 cm (1,800 W), switches to 17 x 26,5 cm (2,600 W) roasting zone.
1 Super-Quick cooking zone ø 12 cm (750 W), converts to ø 21 cm (2,200 W) cooking zone.
2 Super-Quick cooking zones ø 14.5 cm (1,200 W).

Handling
Sensor control with direct selection of ouput level.
Cooking zone marking.
Electronic power control in 9 output levels.

Features
Quick boil timer, with individually adjustable boiling time.
Cooking timer for up to 90 minutes.
Short-term timer.
Memory function.
Options menu.

Safety
Main switch.
Operation indicator.
Individual residual heat indicators.
Child lock.
Safety shut-off.

Planning notes
Appliance depth 43 mm, depth at plug socket 50 mm.
Under the plug socket, a 10 mm clearance must be observed from side panels or from intermediate shelf.
The cooktop must be freely accessible from underneath to be able to detach the cooktop's base in a downward direction.
Installation possible in a 60 cm wide lower cabinet.
Appliance must be fixed from underneath.
Cooktop clamping range: 20 – 50 mm.
Appliance weight: approx. 9 kg.

Connection
Total connected load 7.2 kW.
Plan a connection cable.

L	N	⏚

L_1	L_2	N	⏚

L_1	L_2	L_3	N	⏚

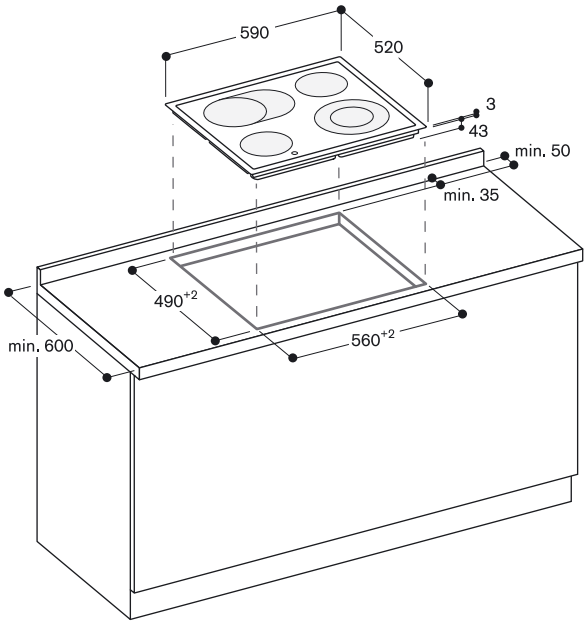

Recessed depth in the vicinity of the electrical connection box 60 mm

AMadison
Your Appliance Authority™
800-570-3355

BT 481 000
Cast roaster made of aluminium casting
Non-stick cover can also be used as fish or grill pan.
For cooking zone 18 x 41.5 cm.

CA 280 410
Built-in frame (to be welded in)

CA 429 410
Frame set including decorative frame (to be welded in) and holding frame

GN 232 110
Teppan Yaki made of multi ply material, GN 1/1
For full surface induction hob CX 480.

GN 232 230
Teppan Yaki made of multi ply material, GN 2/3
For full surface induction hob CX 480.

GP 900 001
Stainless steel frying sensor pan
Non-stick coating, for ø 15 cm cooking zone.

GP 900 002
Stainless steel frying sensor pan
Non-stick coating, for ø 18 cm cooking zone.

GP 900 003
Stainless steel frying sensor pan
Non-stick coating, for ø 21 cm cooking zone.

SV 405 001
Spindle extensions up to 80 mm

SV 405 002
Spindle extensions up to 160 mm

SV 405 003
Spindle extensions up to 320 mm

SV 405 011
Spindle extensions up to 65 mm

SV 405 012
Spindle extensions up to 140 mm

SV 405 022
Spindle extensions up to 115 mm

SV 405 032
Spindle extensions up to 160 mm

VA 420 000
Connection strip for combination with other Vario appliances of the 400 series for flush installation

VA 420 001
Connection strip for combination with other Vario appliances of the 400 series for flush installation with appliance cover/adjustment strip

VA 420 010
Connection strip for combination with other Vario appliances of the 400 series for surface installation

VA 420 011
Connection strip for combination with other Vario appliances of the 400 series for surface installation with appliance cover/adjustment strip

VA 450 800
Stainless steel adjustment strip 80 cm
Required accessory for combination of several Vario appliances of the 400 series with at least one appliance cover to compensate the appliance depth.

WP 400 001
Wok pan made of multiple-layer material
With round bottom and handle,
ø 36 cm, 6 litres, height 10 cm.

AjMadison
Your Appliance Authority™
800-570-3355

Appliance type		Gas cooktop	Gas cooktop	Gas cooktop	Gas cooktop
Series				400 series	400 series
Bottled gas 50 mbar					
Bottled gas 28–37 mbar		•		•	
Natural gas 20 mbar			•		•
Width	(cm)	100.2	100.2	90.8	90.8
Stainless steel control panel with integrated knobs					
Aluminium control panel with integrated knobs					
Integrated control knobs					
Control knobs in furniture front		CG 492 110F	CG 492 210	VG 491 110F	VG 491 210
Brushed stainless steel cooktop / 3 mm frame		•/–	•/–	•/•	•/•
Shot blasted stainless steel cooktop / frame		–/–	–/–	–/–	–/–
Glass ceramic cooktop					
Surface-mounted				•	•
Cooktop flush in the worktop				•	•
Cast pan support flush in the worktop		•	•		
Welded into stainless steel worktop		•	•		
Cooking zones					
Number of cooking zones		5	5	5	5
Three-ring wok burner (230 – 4,600 W)					
Three-ring wok burner (230 – 5,000 W)					
Three-ring wok burner (300 – 5,000 W)		1		1	
Three-ring wok burner (300 – 6,000 W)			1		1
Two-ring wok burner (300 – 6,000 W)					
Three-ring high output burners (1,200 – 2,500 W)					
Three-ring high output burners (1,260 – 3,600 W)					
Two-ring high output burners (165 – 4,000 W)		2	2	2	2
Two-ring standard burners (165 – 2,000 W)		2	2	2	2
High-output burner (500 – 3,000 W)					
High-output burner (560 – 2,800 W)					
High-output burner (590 – 2,800 W)					
High-output burner (600 – 3,000 W)					
Standard burner (370 – 1,900 W)					
Standard burner (380 – 1,900 W)					
Standard burner (320 – 1,750 W)					
Standard burner (350 – 1,750 W)					
Standard burner (410 – 1,750 W)					
Economy burner (330 – 1,000 W)					
Economy burner (310 – 1,100 W)					
Features / accessories					
Automatic fast ignition		•	•	•	•
Electronic flame monitoring with automatic re-ignition		•	•	•	•
Electric ignition					
Cast pan support		3-part	3-part	3-part	3-part
Stainless steel appliance cover					
Aluminium appliance cover					
Wok pan		WP 400 001[1]	WP 400 001[1]	WP 400 001[1]	WP 400 001[1]
Connection					
Total connected load gas	(kW)	17.0	18.0	17.0	18.0
Total connected load electric	(W)	15.0	15.0	15.0	15.0

• Standard. – Not available.

[1] Special accessory. [2] Nozzles for bottled gas 50 mbar are included.

[3] Nozzles for bottled gas 50 mbar and 28–30/37 mbar are included.

[4] For bottled gas 50 mbar (noozles included).

AjMadison
Your Appliance Authority™
800-570-3355

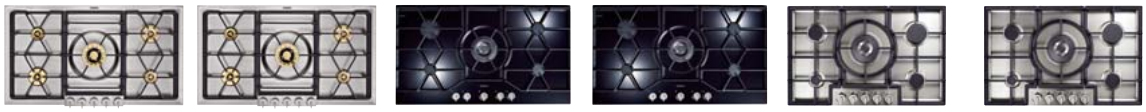

Gas cooktop	Gas cooktop	Gas cooktop	Gas cooktop	Gas cooktop	Gas cooktop
200 series	200 series				
•		•		•	
	•		•[2]		•[2]
91.4	91.4	91.4	91.4	80.4	80.4
VG 295 114F	VG 295 214				
VG 295 134F	VG 295 234				
		CG 290 111F	CG 290 211[2]	CG 280 110F	CG 280 210[2]
•/–	•/–	–/–	–/–	•/–	•/–
–/•	–/•	–/–	–/–	–/–	–/–
		•	•		
•	•	•	•		
		•	•		
				•	•
5	5	5	5	5	5
				1	(1[4])
					1
1					
	1				
		1	1		
2	2				
2	2				
					1
		1	1		
				1	(1[4])
		2	2		
					2
				2	(2[4])
				1	1
		1	1		
•	•				
•	•				
		•	•	•	•
3-part	3-part	3-part	3-part	3-part	3-part
WP 400 001[1]	WP 400 001[1]	WP 400 001[1]	WP 400 001[1]	WP 400 001[1]	WP 400 001[1]
17.0	18.0	13.7	13.7	12.1	12.5 / (12.1[4])
25.0	25.0	0.6	0.6	1.0	1.0

AjMadison
Your Appliance Authority™
800-570-3355

Appliance type		Gas cooktop	Gas cooktop	Gas cooktop
Series			200 series	200 series
Bottled gas 50 mbar				
Bottled gas 28–37 mbar			•	
Natural gas 20 mbar		•[3]		•
Width	(cm)	70	58	58
Stainless steel control panel with integrated knobs			VG 264 114F	VG 264 214
Aluminium control panel with integrated knobs			VG 264 134F	VG 264 234
Integrated control knobs		CG 270 211[3]		
Control knobs in furniture front				
Brushed stainless steel cooktop / 3 mm frame		•/•	•/–	•/–
Shot blasted stainless steel cooktop / frame		–/–	–/•	–/•
Glass ceramic cooktop				
Surfaced-mounted		•	•	•
Cooktop flush in the worktop		•		
Cast pan support flush in the worktop				
Welded into stainless steel worktop				
Cooking zones				
Number of cooking zones		4	4	4
Three-ring wok burner (1,550 – 4,000 W)		1		
Three-ring wok burner (230 – 4,600 W)				
Three-ring wok burner (230 – 5,000 W)				
Three-ring wok burner (300 – 5,000 W)				
Three-ring wok burner (300 – 6,000 W)				
Two-ring wok burner (300 – 6,000 W)				
Three-ring high output burners (1,200 – 2,500 W)				
Three-ring high output burners (1,260 – 3,600 W)				
Two-ring high output burners (165 – 4,000 W)				
Two-ring standard burners (165 – 2,000 W)				
High-output burner (500 – 3,000 W)		1		
High-output burner (560 – 2,800 W)			2	2
High-output burner (590 – 2,800 W)				
High-output burner (600 – 3,000 W)				
Standard burner (370 – 1,900 W)				
Standard burner (380 – 1,900 W)			2	2
Standard burner (320 – 1,750 W)				
Standard burner (350 – 1,750 W)		1		
Standard burner (410 – 1,750 W)				
Economy burner (330 – 1,000 W)		1		
Economy burner (310 – 1,100 W)				
Features / accessories				
Automatic fast ignition				
Electronic flame monitoring with automatic re-ignition				
Electric ignition		•	•	•
Cast pan support		3-part	2-part	2-part
Stainless steel appliance cover			2x VD 201 014[1]	2x VD 201 014[1]
Aluminium appliance cover			2x VD 201 034[1]	2x VD 201 034[1]
Wok pan				
Connection				
Total connected load gas	(kW)	9.75	9.4	9.4
Total connected load electric	(W)	1.0	1.0	1.0

• Standard. – Not available.

[1] Special accessory. [2] Nozzles for bottled gas 50 mbar are included.

[3] Nozzles for bottled gas 50 mbar and 28–30/37 mbar are included.

[4] For bottled gas 50 mbar (noozles included).

AjMadison
Your Appliance Authority™
800-570-3355

AjMadison
Your Appliance Authority™
800-570-3355

Induction cooktops.

Appliance type		Full surface induction cooktop	Induction cooktop	Induction cooktop
Width	(cm)	80	90	90
Frameless for flush installation		CX 480 100	CI 491 103	
Stainless steel frame			CI 491 113	CI 490 112
Stainless steel frame 3 mm for surface or flash installation		CX 480 111		
Operation				
TFT touch display		•		
Sensor control / touch keys			–/•	–/•
Twist-Pad control			•	•
Knobs in furniture front / integrated control panel				
Cooking zones / combinations				
Number of cooking zones or items of cookware		4	5	4
Induction cooking zone ø 15 cm (1,400 / 1,800 W)			1	1
Induction cooking zone ø 18 cm (1,800 / 2,500 W)			2	2
Induction cooking zone ø 21 cm (2,200 / 3,300 W)			1	1
Induction cooking zone ø 28 cm (2,400 / 3,600 W)				
Induction cooking zone ø 18 cm (1,800 / 2,500 W) / ø 28 cm (2,800 / 4,400 W)				
Induction cooking zone ø 21 cm (2,200 / 3,300 W) / ø 26 cm (2,600 / 3,400 W) / ø 32 cm (3,300 / 4,600 W)			1	
Induction cooking zone ø 18 cm (1,800 / 2,500 W) / Roaster zone 18 x 28 cm (2,000 / 2,600 W)				
Features / accessories				
Electronic output control		•	•	•
Number of output levels		17	17	17
Pot detection		•	•	•
Residual heat indicator		•	•	•
Cooking timer: Number of cooking zones		4	5	4
Booster function: Number of cooking zones		4	5	4
Quick boil timer: Number of cooking zones			5	4
Frying sensor function: Number of cooking zones			1 x 18 cm 1 x 21 cm	1 x 18 cm 1 x 21 cm
Child lock		•	•	•
Safety lock		•	•	•
Memory function			•	•
Options menu		•	•	•
Frying sensor pan for ø 15 cm cooking zone				
Frying sensor pan for ø 18 cm cooking zone			GP 900 002[1]	GP 900 002[1]
Frying sensor pan for ø 21 cm cooking zone			GP 900 003[1]	GP 900 003[1]
Connection				
Total connected load electric	(kW)	7.2	10.8	7.2

• Standard. – Not available.

[1] Special accessories.

AjMadison
Your Appliance Authority™
800-570-3355

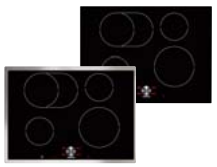

Induction cooktop	Induction cooktop	Induction cooktop	Induction cooktop	Induction cooktop
80	70	60	60	60
CI 481 102	CI 271 102	CI 262 102	CI 261 102	
CI 481 112	CI 271 112	CI 262 112	CI 261 112	CI 263 112
–/•	–/•	–/•	–/•	•/•
•	•	•	•	
4	4	3	4	4
2	2	1	2	2
1	1	1	1	1
1				
		1		
	1		1	1
•	•	•	•	•
17	17	17	17	9
•	•	•	•	•
•	•	•	•	•
4	4	3	4	4
4	4	3	4	4
4	4	3	4	4
1 x 15 cm	1 x 15 cm	1 x 15 cm	1 x 15 cm	1 x 15 cm
1 x 21 cm	1 x 21 cm	1 x 21 cm	1 x 21 cm	1 x 21 cm
•	•	•	•	•
•	•	•	•	•
•	•	•	•	•
•	•	•	•	•
GP 900 001[1]	GP 900 001[1]	GP 900 001[1]	GP 900 001[1]	GP 900 001[1]
GP 900 003[1]	GP 900 003[1]	GP 900 003[1]	GP 900 003[1]	GP 900 003[1]
7.2	7.0	7.2	7.0	7.0

AjMadison
Your Appliance Authority™
800-570-3355

Glas ceramic cooktops.

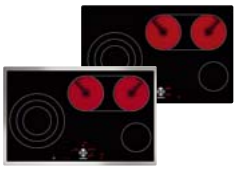

Appliance type		Glass ceramic cooktop	Glass ceramic cooktop
Width	(cm)	90	80
Frameless for flush installation		CE 491 102	CE 481 102
Stainless steel frame		CE 491 112	CE 481 112
Operation			
Sensor control / touch keys		–/•	–/•
Twist-Pad control		•	•
Control knob in furniture front/integrated control panel			
Cooking zones / combinations			
Number of cooking zones		5	4
Super-Quick cooking zone ø 14.5 cm (1,200 W)		1	1
Super-Quick cooking zone ø 18 cm (1,800 W)			
Super-Quick cooking zone ø 12 cm (800 W) / ø 18 cm (2,000 W)			
Super-Quick cooking zone ø 12 cm (750 W) / ø 21 cm (2,200 W)		1	
Super-Quick cooking zone ø 14.5 cm (1,000 W) / ø 21 cm (2,200 W)			
Super-Quick cooking zone ø 18 cm (1,500 W) / ø 23 cm (2,400 W)			
Super-Quick cooking zone ø 14.5 cm (1,050 W) / ø 21 cm (2,200 W) / ø 27 cm (3,080 W)		1	1
Super-Quick cooking zone ø 17 cm (1,800 W) / Roaster zone 17 x 26.5 cm (2,600 W)			
Super-Quick cooking zone ø 18 cm (1,800 W) / together convertible to roasting zone 18 x 41.5 cm (4,400 W)		2	2
Features / accessories			
Electronic output control		•	•
Number of output levels		17	17
Residual heat indicator		•	•
Cooking timer: Number of cooking zones		5	4
Quick boil timer: Number of cooking zones		5	4
Frying sensor function: Number of cooking zones		1 x 21 cm	1 x 21 cm
Child lock		•	•
Safety lock		•	•
Memory function		•	•
Options menu		•	•
Cast roaster for roaster zone 18 x 41.5 cm		BT 481 000[1]	BT 481 000[1]
Frying sensor pan for ø 21 cm cooking zone		GP 900 003[1]	GP 900 003[1]
Connection			
Total connected load electric	(kW)	10.9	8.7

• Standard. – Not available.

[1] Special accessories.

AiMadison
Your Appliance Authority
800-570-3355

Glass ceramic cooktop	Glass ceramic cooktop
70	60
CE 273 112	CE 261 112
•/•	•/•
4	4
1	2
1	
1	1
1	1
•	•
9	9
•	•
4	4
4	4
•	•
•	•
•	•
•	•
7.8	7.2

AjMadison
Your Appliance Authority™
800-570-3355

AjMadison
Your Appliance Authority
800-570-3355

Ventilation appliances.

Ceiling ventilation.	196
Recommended configurations of ceiling ventilation.	198
Table ventilations.	200
Downdraft ventilation.	204
Island hoods.	208
Wall-mounted hoods.	213
Flat kitchen hoods.	219
Canopy extractors.	222
Remote fan units.	224
Planning notes / Recommended configurations of VL and AR.	228
Planning notes for motorless ventilation units.	234
Accessories / Special accessories.	236
Technical specifications.	240

Appliance Authority™
800-570-3355

AC 402 180
Stainless steel
Filter module
Air extraction/recirculation with remote fan unit AR 400/401
Motorless

Installation accessories

AD 704 044
Air collector box DN 200 cylindrical duct
2 x DN 150 cylindrical duct air intake.
1-2 x DN 200 cylindrical duct air outlet.

AD 854 044
Air collector box DN 150 flat duct
2 x DN 150 flat duct air intake.
1 x DN 200 flat duct air outlet.

Special accessories

KF 273 198
Activated charcoal air filter

Vario ceiling ventilation
AC 402

- Discreet integration into the architecture of the kitchen
- Flexible by dimension, performance and ventilation mode
- Room ventilation
- Modular ceiling ventilation which can be configurated individually by separate components such as filter module, control modules and light module
- Individual configuration of unobstructed airflow of remote fan unit from 950 – 2,800 m³/h
- Highly efficient patented rim extraction
- Planed and easy to clean underside with covered filters

Output
Maximum air output in combination with remote fan units s. table remote fan units on page 252/253.
Sound power level depends on the built-in situation.

Features
Rim extraction filter, dishwasher-safe.
Installation frame for thread rods (rods not included).
Connection piece DN 150 cylindrical.

Planning notes
The ceiling ventilation has to be handled as a room ventilation when distance to cooktop is larger than 120 cm since the direct capture of vapours will be limited. The needed airflow is given by an air exchange rate of 10 to 12 times the room volume.
Please refer to page 198/199 for recommended configurations of ceiling ventilations and remote fan units and the resulting dimensions.
Air extraction in combination with remote fan unit AR 400/401. For recirculation mode 1 activated carbon filter KF 273 198 per filter module is needed.
Max. 2 filter modules to be connected to 1 AR 400 131 or AR 401 131/140.
Max. 4 filter modules to be connected to 1 AR 400 140.
When installing remote fan unit AR 400 within the ceiling or furniture block it must remain accessible through the ceiling cutout or another maintenance access.
To be installed in standard ceiling or furniture cutout which will be covered by module frames with 0.8 mm thickness.
When installing a ventilation hood with air extraction mode and a chimney-vented fireplace, the hood's power supply line needs a suitable safety switch.
For maximum duct lengths use Gaggenau flat rectangular ducts AD 8... or Naber-System Compair flow. Other flat ducts are not permitted!
Please ensure when installing the exhaust air ducting that no sharp bends are caused and that the cross-section of the ducting is not constricted in any way.
For downdraft configurations with maximum lengths of exhaust air ducts go to Rodun at www.gaggenau.com.

AC 482 180
Stainless steel
Control module with light
For controlling remote fan units AR 400/401

AC 462 180
Stainless steel
Control module without light
For controlling remote fan units AR 400/401

Special accessories

AA 090 100
Circuit amplifier for connecting two remote fan units

Vario ceiling ventilation
AC 482/AC 462

- Control module of ceiling ventilation with light
- Individual configuration of unobstructed airflow of remote fan unit from 950 – 2,800 m³/h
- Individual integration of light elements into the configuration of the ceiling ventilation

Output
Maximum air output in combination with remote fan units s. table remote fan units on page 252/253.

Features
7-key infrared remote control, backup keys for operation also on the control module.
3 electronically controlled output levels.
Intensive mode.
Run-on function.
Acoustic grease filter saturation indicator.
Dimmable halogen Soft-Light 2 x 20 W (only at AC 482).

Planning notes
Fixing at the filter module.
Max. 2 AR 400/401 to be controlled with one control module.
One amplifier AA 090 100 is needed for connecting two remote fan units.
Max. 2 additional light modules connected to one control module with light.
Fit one socket within the area of control module, two sockets when using amplifier AA 090 100.
When installing a ventilation hood with air extraction mode and a chimney-vented fireplace, the hood's power supply line needs a suitable safety switch.

Connection
Total connected load max. 355 – 1,160 W.
Connecting cable 1.3 m with plug.

AHadison
Home Appliance Authority™
800-570-3355

Vario ceiling ventilation
AC 472

- Light module of ceiling ventilation
- Individual integration of light elements into the configuration of the ceiling ventilation

Features
Connection cable for connection with control module.
Dimmable halogen Soft-Light 2 x 20 W.

Planning notes
Please refer to page 198/199 for recommended configurations of ceiling ventilations and remote fan units and the resulting dimensions.
Fixing at the filter module.
Max. 2 additional light modules connected to one control module with light.

Connection
Total connected load 40 W.

AC 472 180
Stainless steel
Light module
For completing control module with light

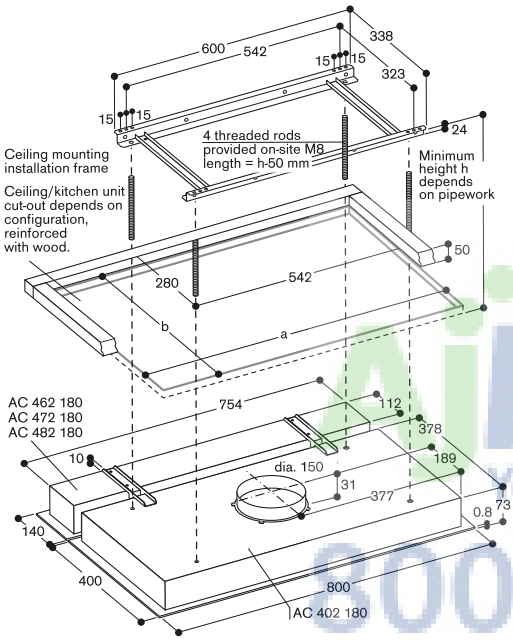

For multi-configurations:
Ceiling deflection around cut-out: max. ± 3 mm.
Support is required in the middle to prevent deflection upwards when fastening the modules.

Minimum installation height including flat duct NW 150

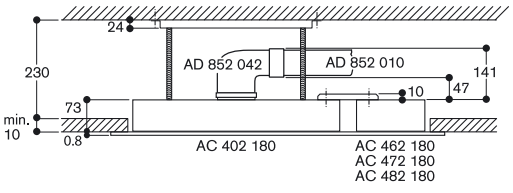

Required installation space
F3-CL-L1

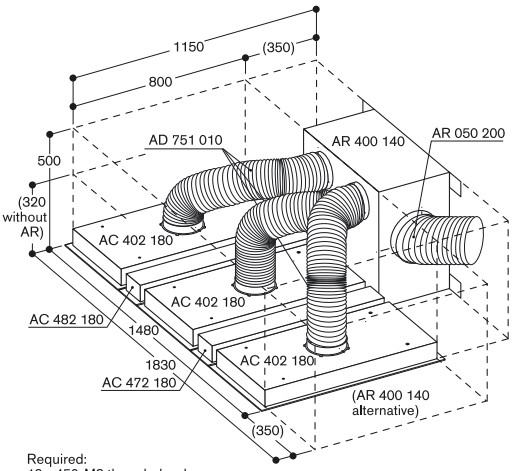

Required:
12 x 450xM8 threaded rod
48 x M8 nut
12 x ceiling bolt

Required installation space
F2-CL

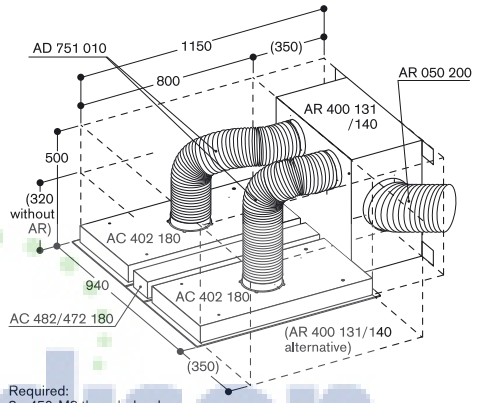

Required:
8 x 450xM8 threaded rod
32 x M8 nut
8 x ceiling bolt

Required installation space
FL2-CL-L1

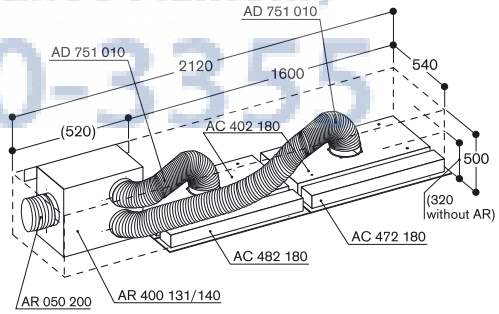

Required:
8 x 450xM8 threaded rod
32 x M8 nut
8 x ceiling bolt

AC 402 Ceiling fixture and position of connecting piece NW 150

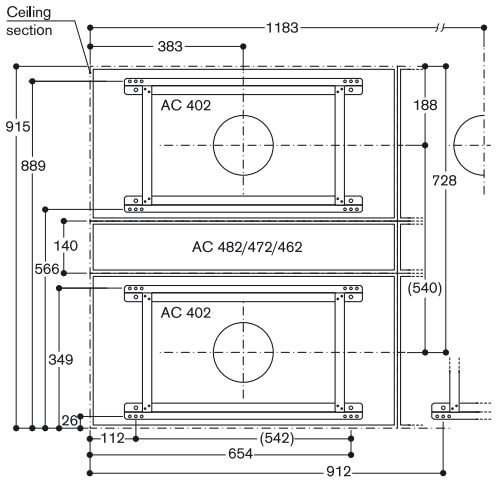

AiMadison
Your Appliance Authority™
800-570-3355

Recommended configurations for ceiling ventilation.

Planning as a cooktop ventilation wall/island (W/I) up to max. 120 cm distance to the cooktop.
For larger distances planning as room ventilation (R) with air exchange rates 10 to 12 times the room volume.

The given airflow of the remote fan units will be reduced by the different ducting types between filter modules and AR 400/401 as well as by the further ducting. For additional ducting chose the configuration with higher airflow.

Bold print: favoured configuration
Regular print: possible configuration
Other: – Not possible due to performance or ducting reasons

Respect the positioning of the remote fan units and the run of the ducts.

Modules of ceiling ventilation:
F = Filter module (FL = in-line configuration)
CL = Control module with light
CO = Control module without
L = Light module

Minimal construction height including installation frame

150 - 160

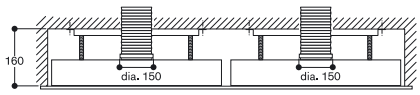

Structure within ceiling/ furniture element

Minimal construction height with flexible aluminium ducting straight through the ceiling.
Remote fan unit separately placed.

Air collector box, if needed

(AD 704 044)
2–3 x DN 150 cylindrical duct-> 1-2x DN 200 cylindrical duct

	Maximal width of cooktop Cooktop ventilation, max. distance 120 cm: W = Cooktop ventilation wall I = Cooktop ventilation island R = Room ventilation, distance > 120 cm	Ceiling cutout a x b (frame size) mm	Remote fan unit inside installation (unobstructed airflow fan unit alone) Duct behind fan DN 200	Remote fan unit outside installation wall/roof (unobstructed airflow fan unit alone)
Range of unbstructed airflow of remote fan units 950 - 1,400 m³/h			**No air collector box necessary**	
FL1-CL FL1-CO	**W: 80 cm I: 60 cm, no VR, VP, VF** R: -	765 x 515 (800 x 540)	**1x AR 400 131 (1,000 m³/h)** 1x AR 400 140 (1,400 m³/h)	**1x AR 401 131 (950 m³/h)** 1x AR 401 140 (1,200 m³/h)
FL1-CL-L1	**W: 80 cm I: 60 cm, no VR, VP, VF** R: -	765 x 660 respect direction! (800 x 680)	**1x AR 400 131 (1,000 m³/h)** 1x AR 400 140 (1,400 m³/h)	**1x AR 401 131 (950 m³/h)** 1x AR 401 140 (1,200 m³/h)
Range of unbstructed airflow of remote fan units 950 - 2,800 m³/h				
FL2-CL-L1	**W: 120 cm, VR, VP, VF centered** I: 90 cm, no VR, VP, VF R: -	1,565 x 515 (1,600 x 540)	1x AR 400 131 (1,000 m³/h) **1x AR 400 140 (1,400 m³/h)** 2x AR 400 131 (2,000 m³/h) 2x AR 400 140 (2,800 m³/h)	1x AR 401 131 (950 m³/h) **1x AR 401 140 (1,200 m³/h)** 2x AR 401 131 (1,900 m³/h) 2x AR 401 140 (2,400 m³/h)
F2-CL F2-CO	W: - **I: 80 cm** R: 60 cm, 10x air exchange rate, no VR, VP, VF	915 x 765 respect direction! (940 x 800)	1x AR 400 131 (1,000 m³/h) **1x AR 400 140 (1,400 m³/h)** 2x AR 400 131 (2,000 m³/h) 2x AR 400 140 (2,800 m³/h)	1x AR 401 131 (950 m³/h) **1x AR 401 140 (1,200 m³/h)** 2x AR 401 131 (1,900 m³/h) 2x AR 401 140 (2,400 m³/h)
F2-CL-L2	W: - **I: 80 cm** R: 60 cm, 10x air exchange rate, no VR, VP, VF	1,200 x 765 (1220x 800	1x AR 400 131 (1,000 m³/h) **1x AR 400 140 (1,400 m³/h)** 2x AR 400 131 (2,000 m³/h) 2x AR 400 140 (2,800 m³/h)	1x AR 401 131 (950 m³/h) **1x AR 401 140 (1,200 m³/h)** 2x AR 401 131 (1,900 m³/h) 2x AR 401 140 (2,400 m³/h)
Range of unbstructed airflow of remote fan units 1,400 m³/h			**2 AR: divide airflow of center modules with air collector**	
F3-CL-L1	W: - **I: 120 cm, VR, VP, VF centered R: 120 cm, 10x air exchange rate, 12x with VR, VP, VF**	1,455 x 765 (1,480 x 800)	**1x AR 400 140 (1,400 m³/h) 2x AR 400 131 (2,000 m³/h)** 2x AR 400 140 (2,800 m³/h)	**2x AR 401 131 (1,900 m³/h)** 2x AR 401 140 (2,400 m³/h)
Range of unbstructed airflow of remote fan units 1,400 - 2,800 m³/h				
F4-CO	W: - **I: 120 cm, VR, VP, VF centered R: 120 cm, 10x air exchange rate 12x with VR, VP, VF**	1,715 x 765 (1,740 x 800)	1x AR 400 140 (1,400 m³/h)[1] **2x AR 400 131 (2,000 m³/h)** 2x AR 400 140 (2,800 m³/h)	**2x AR 401 131 (1,900 m³/h)** 2x AR 401 140 (2,400 m³/h)
FL4-CL-L1	W: - **I: 120 cm, VR, VP, VF centered R: 120 cm, 10x air exchange rate, 12x with VR, VP, VF**	2 cutouts 765 x 915 with 35 mm distance and support in the middle. Total cutout 1,565 x 915 with division bar. (1,600 x 940)	1x AR 400 140 (1,400 m³/h)[1] **2x AR 400 131 (2,000 m³/h)** 2x AR 400 140 (2,800 m³/h)	**2x AR 401 131 (1,900 m³/h)** 2x AR 401 140 (2,400 m³/h)
F4-CL-L2	**W: -** I: 160 cm, VR, VP, VF centered R: 160 cm, 10x air exchange rate, 12x with VR, VP, VF	1,995 x 765 (2,020 x 800)	1x AR 400 140 (1,400 m³/h)[1] **2x AR 400 131 (2,000 m³/h)** 2x AR 400 140 (2,800 m³/h)	**2x AR 401 131 (1,900 m³/h)** 2x AR 401 140 (2,400 m³/h)

[1] Do not use air collector boxes. Ducting with 4x DN 150 directly to AR 400 140

Ajmadi
Your Appliance Authority™
800-570-3333

230		with/without AR 400: 350		without AR 400: 320 incl. AR 400 vertically placed: 500	
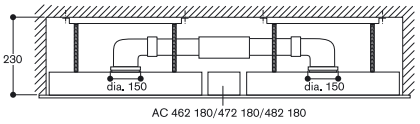		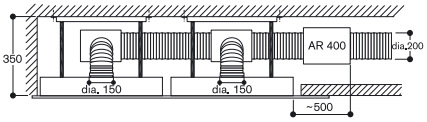		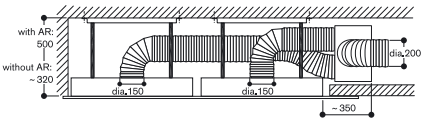	
Remote fan unit separately placed. Construction height including flat rectangular duct. 2 AR 400: placed opposite of each other. (AD 854 044) 2x DN 150 flat duct -> 1 DN 150 flat duct		AR 400 horisontally or AR 401 separately placed. Flexible aluminium ducting DN 150/200 2 AR 400: placed opposite of each other. (AD 704 044) 2–3 x DN 150 cylindrical duct-> 1–2x DN 200 cylindrical duct		Easest ducting with flexible aluminium ducting DN 150 AR 400 placed vertically or separately.	
Remote fan unit inside installation (unobstructed airflow fan unit alone) Duct behind fan DN 200	Remote fan unit outside installation wall/roof (unobstructed airflow fan unit alone)	Remote fan unit inside installation (unobstructed airflow fan unit alone) Duct behind fan DN 200	Remote fan unit outside installation wall/roof (unobstructed airflow fan unit alone)	Remote fan unit inside installation (unobstructed airflow fan unit alone) Duct behind fan DN 200	Remote fan unit inside installation (unobstructed airflow fan unit alone) Duct behind fan DN 200
No air collector box necessary		**No air collector box necessary**			
1x AR 400 131 (1,000 m³/h) 1x AR 400 140 (1,400 m³/h)	**1x AR 401 131 (950 m³/h)** 1x AR 401 140 (1,200 m³/h)	**1x AR 400 131 (1,000 m³/h)** 1x AR 400 140 (1,400 m³/h)	**1x AR 401 131 (950 m³/h)** 1x AR 401 140 (1,200 m³/h)	**1x AR 400 131 (1,000 m³/h)** 1x AR 400 140 (1,400 m³/h)	
1x AR 400 131 (1,000 m³/h) 1x AR 400 140 (1,400 m³/h)	**1x AR 401 131 (950 m³/h)** 1x AR 401 140 (1,200 m³/h)	**1x AR 400 131 (1,000 m³/h)** 1x AR 400 140 (1,400 m³/h)	**1x AR 401 131 (950 m³/h)** 1x AR 401 140 (1,200 m³/h)	**1x AR 400 131 (1,000 m³/h)** 1x AR 400 140 (1,400 m³/h)	
1x AR 400 131 (1,000 m³/h) **1x AR 400 140 (1,400 m³/h)** 2x AR 400 131 (2,000 m³/h) 2x AR 400 140 (2,800 m³/h)	1x AR 401 131 (950 m³/h) **1x AR 401 140 (1,200 m³/h)** 2x AR 401 131 (1,900 m³/h) 2x AR 401 140 (2,400 m³/h)	1x AR 400 131 (1,000 m³/h) **1x AR 400 140 (1,400 m³/h)** 2x AR 400 131 (2,000 m³/h) 2x AR 400 140 (2,800 m³/h)	1x AR 401 131 (950 m³/h) **1x AR 401 140 (1,200 m³/h)** 2x AR 401 131 (1,900 m³/h) 2x AR 401 140 (2,400 m³/h)	1x AR 400 131 (1,000 m³/h) **1x AR 400 140 (1,400 m³/h)** 2x AR 400 131 (2,000 m³/h) 2x AR 400 140 (2,800 m³/h)	
1x AR 400 131 (1,000 m³/h) **1x AR 400 140 (1,400 m³/h)** 2x AR 400 131 (2,000 m³/h) 2x AR 400 140 (2,800 m³/h)	1x AR 401 131 (950 m³/h) **1x AR 401 140 (1,200 m³/h)** 2x AR 401 131 (1,900 m³/h) 2x AR 401 140 (2,400 m³/h)	1x AR 400 131 (1,000 m³/h) **1x AR 400 140 (1,400 m³/h)** 2x AR 400 131 (2,000 m³/h) 2x AR 400 140 (2,800 m³/h)	1x AR 401 131 (950 m³/h) **1x AR 401 140 (1,200 m³/h)** 2x AR 401 131 (1,900 m³/h) 2x AR 401 140 (2,400 m³/h)	1x AR 400 131 (1,000 m³/h) **1x AR 400 140 (1,400 m³/h)** 2x AR 400 131 (2,000 m³/h) 2x AR 400 140 (2,800 m³/h)	
1x AR 400 131 (1,000 m³/h) **1x AR 400 140 (1,400 m³/h)** 2x AR 400 131 (2,000 m³/h) 2x AR 400 140 (2,800 m³/h)	1x AR 401 131 (950 m³/h) **1x AR 401 140 (1,200 m³/h)** 2x AR 401 131 (1,900 m³/h) 2x AR 401 140 (2,400 m³/h)	1x AR 400 131 (1,000 m³/h) **1x AR 400 140 (1,400 m³/h)** 2x AR 400 131 (2,000 m³/h) 2x AR 400 140 (2,800 m³/h)	1x AR 401 131 (950 m³/h) **1x AR 401 140 (1,200 m³/h)** 2x AR 401 131 (1,900 m³/h) 2x AR 401 140 (2,400 m³/h)	1x AR 400 131 (1,000 m³/h) **1x AR 400 140 (1,400 m³/h)** 2x AR 400 131 (2,000 m³/h) 2x AR 400 140 (2,800 m³/h)	
2 AR: divide airflow of center modules with air collector		**2 AR: divide airflow of center modules with air collector**			
2x AR 400 131 (2,000 m³/h) 2x AR 400 140 (2,800 m³/h)	**2x AR 401 131 (1,900 m³/h)** 2x AR 401 140 (2,400 m³/h)	1x AR 400 140 (1,400 m³/h) **2x AR 400 131 (2,000 m³/h)** 2x AR 400 140 (2,800 m³/h)	**2x AR 401 131 (1,900 m³/h)** 2x AR 401 140 (2,400 m³/h)	**1x AR 400 140 (1,400 m³/h)**	
1x AR 400 140 (1,400 m³/h)[1] 2x AR 400 131 (2,000 m³/h) 2x AR 400 140 (2,800 m³/h)	2x AR 401 131 (1,900 m³/h) 2x AR 401 140 (2,400 m³/h)	2x AR 400 131 (2,000 m³/h) 2x AR 400 140 (2,800 m³/h)	2x AR 401 131 (1,900 m³/h) 2x AR 401 140 (2,400 m³/h)	1x AR 400 140 (1,400 m³/h)[1] **2x AR 400 131 (2,000 m³/h)** 2x AR 400 140 (2,800 m³/h)	
1x AR 400 140 (1,400 m³/h)[1] **2x AR 400 131 (2,000 m³/h)** 2x AR 400 140 (2,800 m³/h)	**2x AR 401 131 (1,900 m³/h)** 2x AR 401 140 (2,400 m³/h)	**2x AR 400 131 (2,000 m³/h)** 2x AR 400 140 (2,800 m³/h)	**2x AR 401 131 (1,900 m³/h)** 2x AR 401 140 (2,400 m³/h)	1x AR 400 140 (1,400 m³/h)[1] **2x AR 400 131 (2,000 m³/h)** 2x AR 400 140 (2,800 m³/h)	
1x AR 400 140 (1,400 m³/h)[1] 2x AR 400 131 (2,000 m³/h) 2x AR 400 140 (2,800 m³/h)	2x AR 401 131 (1,900 m³/h) 2x AR 401 140 (2,400 m³/h)	**2x AR 400 131 (2,000 m³/h)** 2x AR 400 140 (2,800 m³/h)	**2x AR 401 131 (1,900 m³/h)** 2x AR 401 140 (2,400 m³/h)	1x AR 400 140 (1,400 m³/h)[1] **2x AR 400 131 (2,000 m³/h)** 2x AR 400 140 (2,800 m³/h)	

800-370-3333
Your Appliance Authority™

AL 400 120
Stainless steel
Width 120 cm
Air extraction/recirculation with remote fan unit AR 400/401/403/413
Motorless

AL 400 190
Stainless steel
Width 90 cm
Air extraction/recirculation with remote fan unit AR 400/401/403/413
Motorless

Installation accessories

AA 010 410
Air exhaust grille recirculation mode
Stainless steel coloured, 90 cm, including installation fittings, height adjustable.

AA 409 400
Furniture support 86 cm for table ventilation 106/90 cm
Recommended as bearer for the worktop, instead of a cabinet frame.

AA 409 430
Furniture support 116 cm for table ventilation 136/120 cm
Recommended as bearer for the worktop, instead of a cabinet frame.

AD 754 045
Connection piece for 2 cylindrical ducts DN 150
Fitting AL 400, front or back side.

AD 854 043
Connection piece for 2 flat ducts DN 150
Fitting AL 400, bottom side.

AD 854 045
Connection piece for 2 flat ducts DN 150
Fitting AL 400, front or back side.

ZB 020 090
Ventilation grille stainless steel
Extension piece for 30 mm, necessary for height adjustment.
Order 1 for height adjustment of 31-60 mm.
Order 2 for height adjustment of 61-70 mm.

Table ventilation
AL 400

- Telescopic table ventilation for combination with all Gaggenau cooktops, completely retractable when not in use
- Dimmable LED light for illumination of the whole cooktop
- Precision crafting of 3 mm stainless steel
- For surface installation with a visible edge or for flush installation
- Can be combined perfectly with other Vario appliances of the 400 series

Output
Maximum air output in combination with remote fan units s. table remote fan units on page 252/253.
Sound power level depends on the built-in situation.

Features
3 electronically controlled output levels.
Intensive mode.
Interval ventilation.
Run-on function.
Grease filter saturation indicator.
Cartridge-type filter, dishwasher-safe.
LED light.
Spare covers for closing air outlets.
No duct connection piece included.

Planning notes
AL 400 120 (AL 400 190)
For operation with 4 (3) Vario 200 series cooktops, 3 (2) Vario 400 series cooktops or a cooktop configuration of up to 120 (92 cm) wide.
Max. output of induction and glass ceramic cooktops 12 kW.
In combination with the cooktop CI 490, installation in 60 cm deep worktops is possible.
Operation of Vario cooking appliances only possible without appliance cover.
Installation is possible in worktops made of stone, synthetics or solid wood. Heat resistance and watertight sealing of the cut edges must be observed. Concerning other materials please consult the worktop manufacturer.
If the remote fan unit is installed within the bottom cabinet and if combined with VK or VF ensure accessibility to the outlets.
The remaining surface of the worktop (min. 50 mm) between the cut-outs must be reinforced with a support. It is recommended to use furniture support AA 409 400/430.
Ovens that do not exceed the maximum allowed cabinet temperature can be combined with the table ventilation if built-in situation permits.
Recommendation for stainless steel parts to match hood that have to be welded and polished: brushed grain 280.
Surfaces: Stainless steel 1.4301, ground and brushed IIIC.

For air recirculation:
The exhaust outlet in the plinth should be as large as possible to minimise draughts.
The location of the exhaust outlet in the plinth is consumer-defined. Minimum cross-section 720 cm².
To avoid smoke when frying/grilling refer to the manuals of VR/VP.

For air extraction:
For maximum duct lengths use Gaggenau flat rectangular ducts AD 8... or Naber-System Compair flow. Other flat ducts are not permitted!
Duct connection front or backwards: 2 ducts DN 150 cylindrical or flat rectangular duct. Downwards 2 ducts DN 150 flat rectangular duct (installation accessory).
When installing a ventilation hood with air extraction mode and a chimney-vented fireplace, the hood's power supply line needs a suitable safety switch.

Connection
Connecting cable 1.7 m with plug.

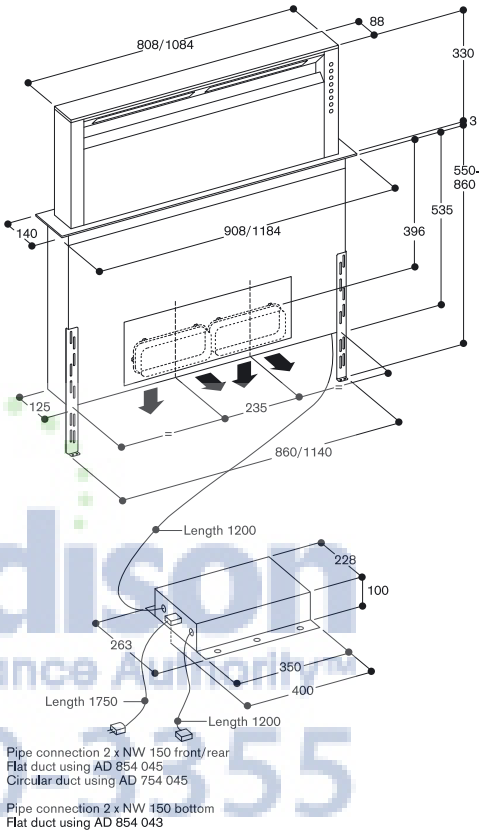

AL 400 connection positions NW 150

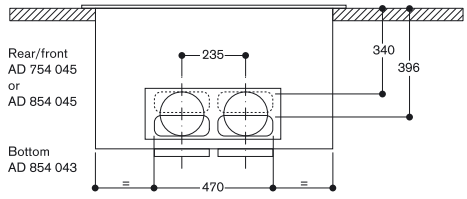

AA 010 410 air exhaust grille

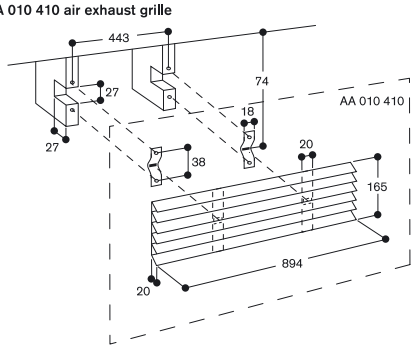

AMadison
Your Appliance Authority
800-570-3655

AD 754/854 045 and AD 854 043

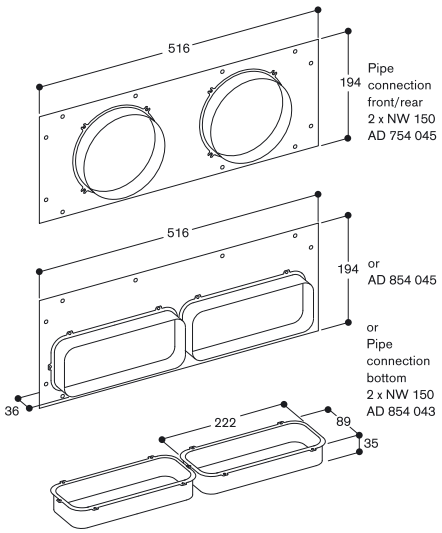

Depth measurements - base unit without back panel - recirculation for maximum power with 2x NW 150

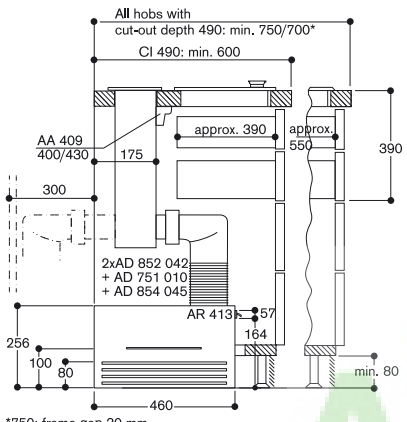

*750: frame gap 30 mm
*700: frame gap 0 mm (only with CI/CE 491 112)

Depth measurements - base unit without back panel - exhaust air mode for maximum power with 2x NW 150

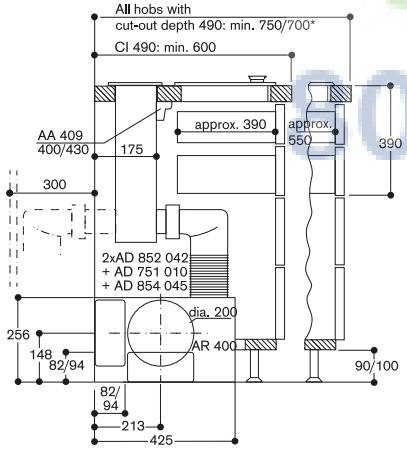

*750: frame gap 30 mm
*700: frame gap 0 mm (only with CI/CE 491 112)

Depth measurements - base unit without back panel - exhaust air mode with floor feed 2x NW 150 round

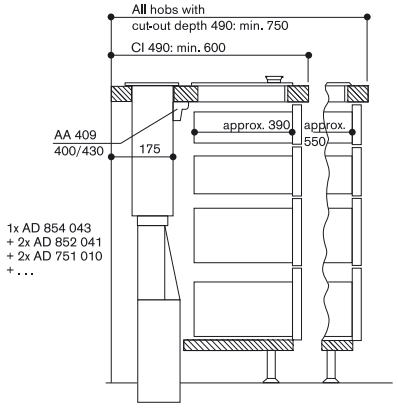

AA 409 400/430 unit support

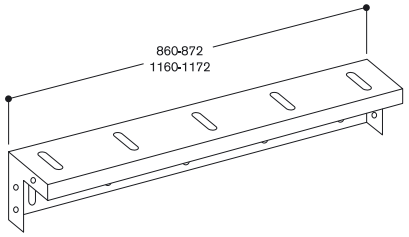

Exhaust air: AL 400 with AR 400 in the base unit

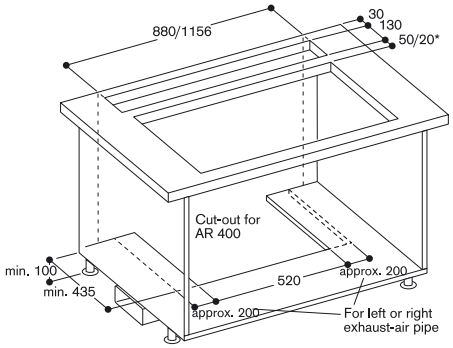

*50: frame gap 30 mm
*20: frame gap 0 mm
(only with CI/CE 491 112)

Circulated air: AL 400 with AR 413 in the base unit

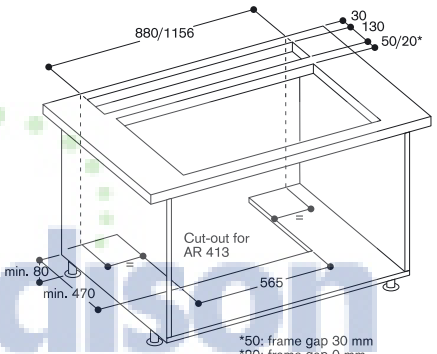

*50: frame gap 30 mm
*20: frame gap 0 mm
(only with CI/CE 491 112)

AL 400 installed flush

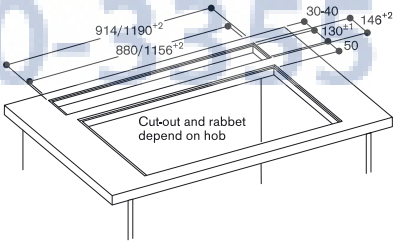

Longitudinal section

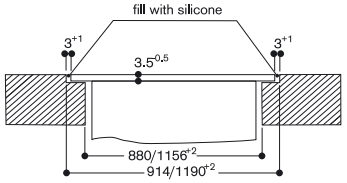

Cross-section

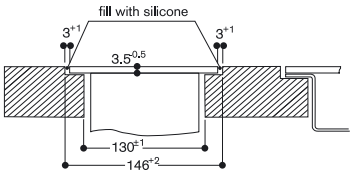

AL 400 cut-out is flush

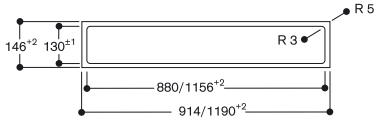

AjMadison
Your Appliance Authority
800-570-3355

AT 400 101
Stainless steel
Width 106 cm
Air extraction/recirculation

AT 400 131
Stainless steel
Width 136 cm
Air extraction/recirculation

Installation accessories

AA 010 410
Air exhaust grille recirculation mode
Stainless steel coloured, 90 cm, including installation fittings, height adjustable.

AA 409 400
Furniture support 86 cm for table ventilation 106/90 cm
Recommended as bearer for the worktop, instead of a cabinet frame.

AA 409 430
Furniture support 116 cm for table ventilation 136/120 cm
Recommended as bearer for the worktop, instead of a cabinet frame.

AA 409 900
Telescopic extension 110 mm for AT 400 101

AA 409 930
Telescopic extension 110 mm for AT 400 131

ZB 020 090
Ventilation grille stainless steel
Extension piece for 30 mm, necessary for height adjustment.
Order 1 for height adjustment of 31-60 mm.
Order 2 for height adjustment of 61-70 mm.

Special accessories

AA 400 010
Beech cutting board, 28 cm deep, fits the workspace on top of the AT 400

AA 400 200
Glass cover, matt-finished, 106 cm, thickness 6 mm, with spacer

AA 400 230
Glass cover, matt-finished, NO_FEATURE, thickness 6 mm, with spacer

AA 409 101
Activated charcoal air filter incl. 2 extra fine grease filters for AT 400 101

AA 409 131
Activated charcoal air filter incl. 2 extra fine grease filters for AT 400 131

Installation accessories for the air recirculation ducts you will find at the pages 236–239.

Industrie Forum Design Hannover

GOOD DESIGN

Design Innovationen Essen Germany
Roter Punkt

Designpreis Deutschland 2011
NOMINIERT

Table ventilation
AT 400

- An eye-catcher for an island solution or with CI 490 for the 60 cm deep worktop
- Highly effective air recirculation technology, 750 m³/h air output at source
- Additional workspace
- Minimal planning and easy installation for air recirculation

Output
Performance output level 3/Intensive:
Air output according to DIN EN 61591.
Sound power and sound pressure depending on built-in situation.

Appliance width 106/136 cm
Air extraction:
660 / 750 m³/h.
Air recirculation:
680 / 750 m³/h.

Features
3 electronically controlled output levels.
Intensive mode.
Interval ventilation.
Run-on function.
Grease filter saturation indicator.
Centrifugal grease filter and drip trays, dishwasher-safe.
Fluorescent tube 30/36 W.
Order activated charcoal filter mat separately.

Planning notes
AT 400 101 for operation with 2 Vario 400 series cooktops or cooktops up to 92 cm wide.
AT 400 131 for operation with 3 Vario 400 series cooktops or cooktops up to 122 cm wide.
For operation with 3 Vario 200 series cooktops, 2 Vario 400 Series cooktops or a cooktop configuration of up to 92 cm wide.
Max. output of glass ceramic cooktops 12 kW.
In combination with the cooktop CI 490, installation in 60 cm deep worktops is possible.
Operation in combination with gas cooktops is not permitted.
The remaining surface of the worktop (min. 50 mm) between the cut-outs must be reinforced with a support. It is recommended to use furniture support AA 409 400/430.
Intermediate shelves in the lower cabinet must be removable.
Hinges on swing doors may have to be repositioned.
The connecting cables of the cooking appliances are laid through the middle of the air duct to the rear.
Water inlet and outlet pipes must not be laid through the air duct.
When operating Vario cooktops, the appliance cover needs to be removed.
Ovens that do not exceed the maximum allowed cabinet temperature can be combined with the table ventilation if built-in situation permits.
The table ventilation cover must remain removable to permit changing of the lamp.
Recommendation for stainless steel parts to match hood that have to be welded and polished: brushed grain 280.
Surfaces: Stainless steel 1.4301, ground and brushed IIIC.

For air recirculation:
Order activated charcoal filter mat separately.
The opening in the lower cabinet shelf may be increased as long as a minimum cross-section of 1,800 cm² is maintained.
The exhaust outlet in the plinth should be as large as possible to minimise draughts.
The location of the exhaust outlet in the plinth is consumer-defined. Minimum cross-section 720 cm².
To avoid smoke when frying/grilling refer to the manuals of VR/VP.

For air extraction:
Attachment of exhaust pipe directly in the blower housing using flexible duct DN 150 or 90° elbow pipe AD 752 030.
Break-out openings for cylindrical pipe AD 752 010 in the blower housing.
For maximum duct lengths use Gaggenau flat rectangular ducts AD 8... or Naber-System Compair flow. Other flat ducts are not permitted!
When installing a ventilation hood with air extraction mode and a chimney-vented fireplace, the hood's power supply line needs a suitable safety switch.

Connection
Total connected load 310/316 W.
Connecting cable 2.0 m with plug (from middle of appliance).

AJ Madison
Your Appliance Authority™
800-570-3355

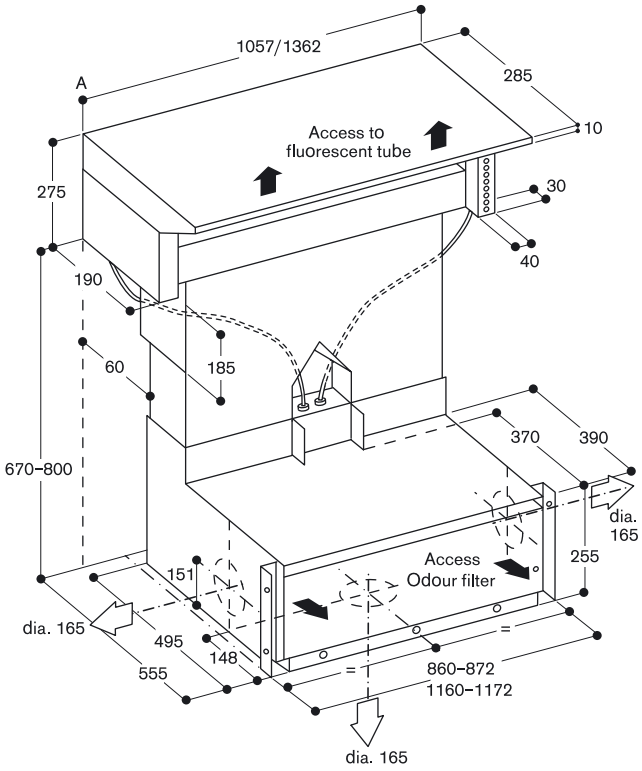

Unit cut-out along a wall

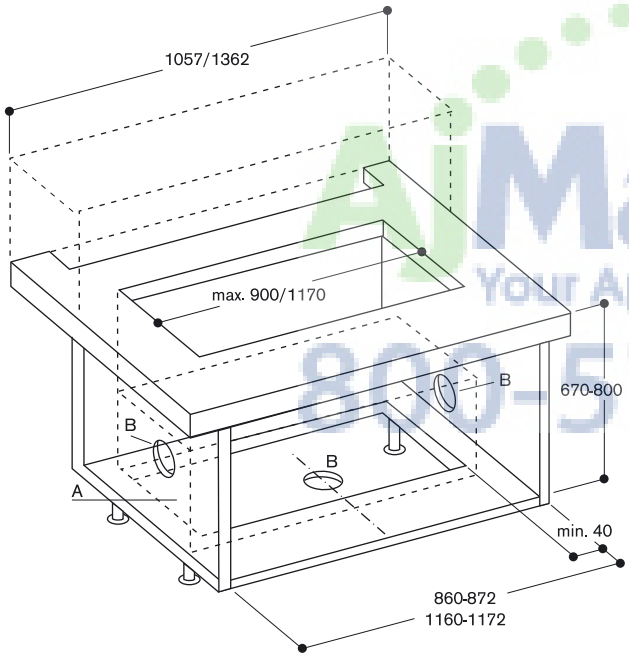

A: Cut-out for recirculation min. 1800 cm^2
B: Cut-out for exhaust air mode (optional), dia. 165 mm

Cut-out measurements for worktops up against a wall

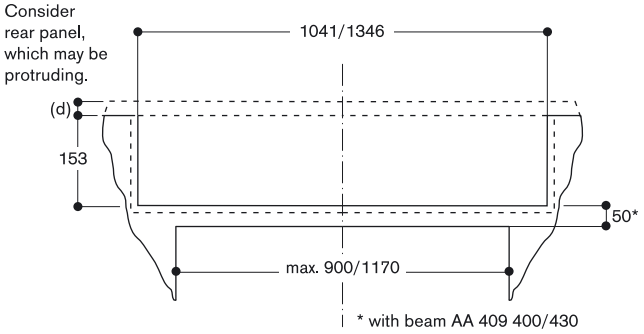

Unit cut-out on an island

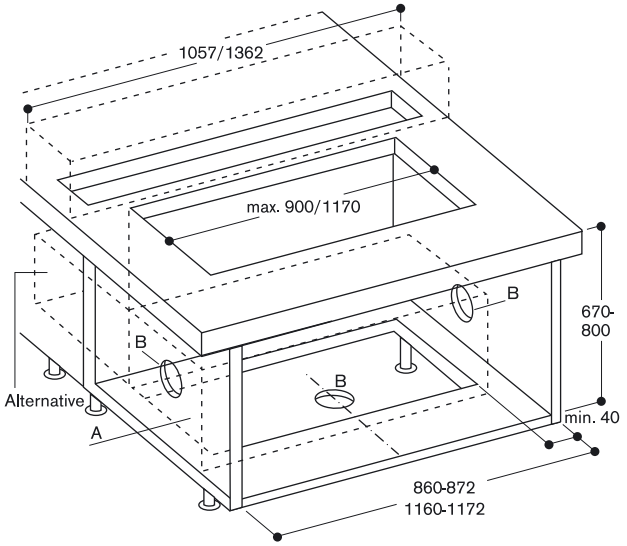

A: Cut-out for recirculation min. 1800 cm^2
B: Optional cut-out for exhaust air mode, dia. 165 mm

Cut-out measurements for an island worktop

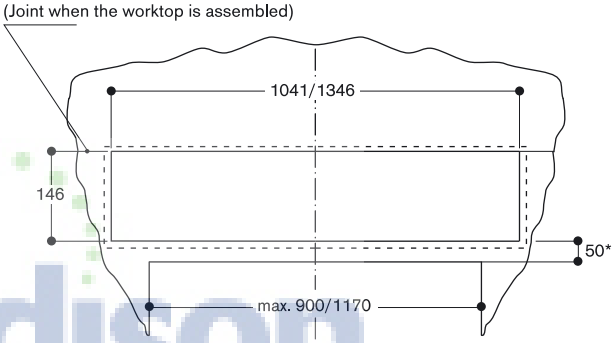

* With beam or unit support AA 409 400/430

AA 010 410 air exhaust grille

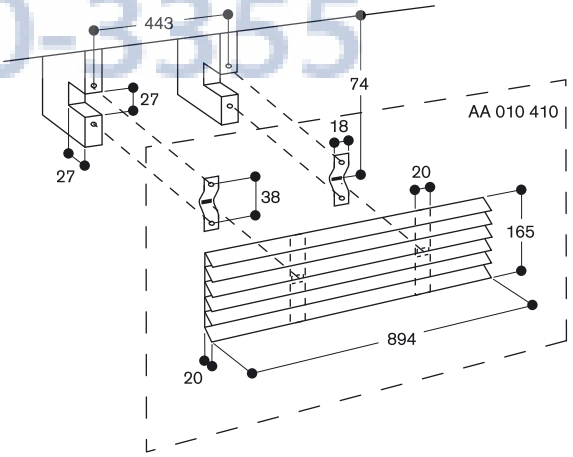

AA 409 400/430 Möbelstrebe

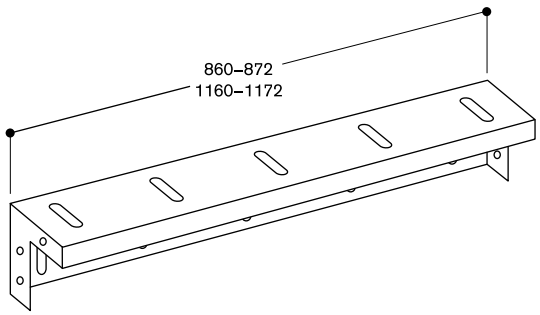

AjMadison
Your Appliance Authority™
800-570-3355

VL 414 110
Stainless steel
Ventilation element
Air extraction/recirculation with remote fan unit AR 400/401/403/413
Without motor and control knob

Necessary installation accessories

AA 490 110
Vario control knob ventilation 400 series
Stainless steel
For operation of one remote fan unit AR 400/401/403/413
In combination with up to four ventilation elements VL 414 connected to one remote fan unit
Solid stainless steel control knob
Can be combined perfectly with other Vario appliances of the 400 series

Installation accessories

AD 724 040
Connection piece for cylindrical duct DN 125

AD 724 041
Connection piece for cylindrical duct DN 125
Necessary for installation to left or right side of VL 414.

AD 854 046
Flat duct system with conducting fins
Connection piece VL 414 for DN 150 flat rectangular

AS 070 000
Connection piece for extension in the case of installation next to VK or VF

VA 420 000
Connection strip for combination with other Vario appliances of the 400 series for flush installation

VA 420 001
Connection strip for combination with other Vario appliances of the 400 series for flush installation with appliance cover/adjustment strip

VA 420 010
Connection strip for combination with other Vario appliances of the 400 series for surface installation

VA 420 011
Connection strip for combination with other Vario appliances of the 400 series for surface installation with appliance cover/adjustment strip

VA 450 110
Stainless steel adjustment strip 11 cm
Required accessory for combination of several Vario appliances of the 400 series with at least one appliance cover to compensate the appliance depth.

Special accessories

AA 414 010
Air baffle for combination with gas cooktops

Installation accessories for the air recirculation ducts you will find at the pages 236–239.

Vario downdraft ventilation 400 series
VL 414

- Highly efficient ventilation system at the cooktop
- Up to 4 ventilation elements can be connected to one remote fan unit, operated using one control knob AA 490
- Flexible power distribution, precise extraction of cooking vapours only at the open ventilation elements
- Precision crafting of 3 mm stainless steel
- For surface installation with a visible edge or for flush installation
- Can be combined perfectly with other Vario appliances of the 400 series
- Compact ducting in connection with flat rectangular pipes AD 8..
- Minimal planning and easy installation for air recirculation

Output
Maximum air output in combination with remote fan units s. table remote fan units on page 252/253.
Sound power level depends on the built-in situation.

Features
Manual opening of the ventilation element.
Closing element made of stainless steel, dishwasher-safe.
Metal grease filter with grease drip tray, dishwasher-safe.
Sensor-controlled operation of the extractor fan if at least one ventilation element VL 414 is open.
No duct connection piece included.

Planning notes
Depending on the type of installation (surface-mounted or flush-mounted, with or without an appliance cover), the specific location of the cut-out and the knob positions may vary.
If installing with the appliance cover VA 440 or adjustement strip VA 450 take into account the additional space required for the depth.
If combining several appliances with at least one appliance cover, the adjustment strip VA 450 is required to compensate for the depth of the appliance without the appliance cover.
If combining several Vario appliances of the 400 series, a connection strip VA 420 must be placed between the appliances. Depending on the type of installation, the corresponding connection strip must be provided.
In the cut-out, the installation system requires the side edge to be at least 10 mm for surface installation and at least 13 mm for flush installation.
Ensure a continuous cut surface of 90°.
The bearing capacity and stability, in the case of thin worktops in particular, must be supported using suitable substructures. Take into account the appliance weight and additional loads.
Additional instructions for flush installation:
Installation is possible in worktops made of stone, synthetics or solid wood. Heat resistance and watertight sealing of the cut edges must be observed. Concerning other materials please consult the worktop manufacturer.
The groove must be continuous and even, so that uniform placing of the appliance on the gasket is ensured.
Do not use discontinuous lining.
The joint width may vary due to size tolerances of the combinations and of the worktop cut-out.
If installing several appliances in individual cut-outs allow for a division bar of minimum 50 mm between the individual cut-outs.

Please read additional planning notes on page 116–123.

Air extraction operation in combination with remote fan units AR 400/401/403 or recirculation mode with AR 413.
Please refer to page 228–233 for recommended configurations of downdraft ventilations and remote fan units and the needed ducting elements.
Maximum cooktop width between two VL: 60 cm.
If operated next to gas appliances, the air baffle AA 414 010 is recommended to ensure maximum performance of the cooktop.
If installed next to gas appliances, flat ducts must not be used for the piping up to the fan unit.
If installed next to VP 414, the flat duct must not be positioned underneath the VP 414.
For maximum duct lengths use Gaggenau flat rectangular ducts AD 8... or Naber-System Compair flow. Other flat ducts are not permitted!
Pipe connection pieces must be ordered separately as installation accessories. Connection NW 125 round on the bottom with AD 724 040, on the sides with AD 724 040 and AD 724 041.
Connection NW 150 flat ducting on the side with AD 854 042.
Connection of 2 VL with ducting 2x DN 125 cylindrical or 2x DN 150 rectangular at remote fan AR 4.. .
For leading through the floor DN 150 cylindrical with connection of 2 DN 125 cylindrical use Y-joint AD 754 044.
Direct connection of 3 or 4 VL 414 only on one AR 400 140, without air-collector or Y-joint.
Please ensure when installing the exhaust air ducting that no sharp bends are caused and that the cross-section of the ducting is not constricted in any way.
For downdraft configurations with maximum lengths of exhaust air ducts go to Rodun at www.gaggenau.com.
Appliance can be snapped into the worktop from above. Additional fixing by clamps accessible from above, clamping range 30-50 mm.
Appliance weight: approx. 3 kg.

Connection
Connection cable 2.0 m between ventilation element VL 414 and control knob AA 490.

AiMadison Your Appliance Authority™ 800-570-3355

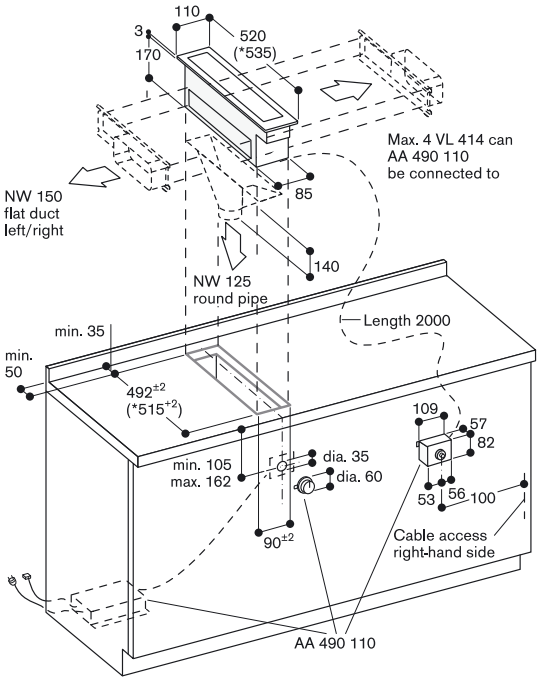

* with spacer batten

Flat duct pipe connection left/right
NW 150 with AD 854 046
Circular duct pipe connection, bottom
NW 125 with AD 724 040
Circular duct pipe connection left/right
NW 125 with AD 724 040 + AD 724 041

See separate planning notes for
- positioning of control knob
- configuration for flexible power distribution

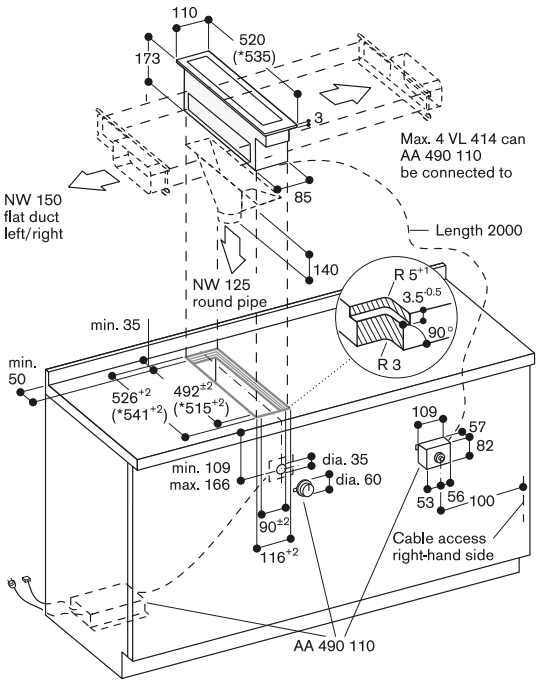

* with spacer batten

Flat duct pipe connection left/right
NW 150 with AD 854 046
Circular duct pipe connection, bottom
NW 125 with AD 724 040
Circular duct pipe connection left/right
NW 125 with AD 724 040 + AD 724 041

See separate planning notes for
- positioning of control knob
- configuration for flexible power distribution

VL 414 with AD 724 040/041

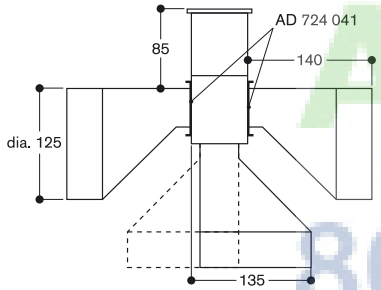

View from above

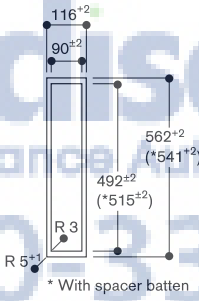

AD 854 046

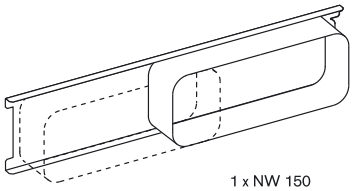

1 x NW 150
variable installation

Longitudinal section

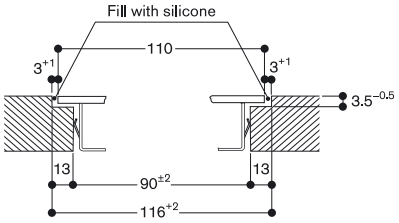

AS 070 000

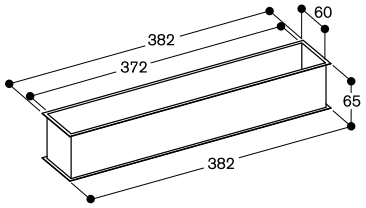

Cross-section

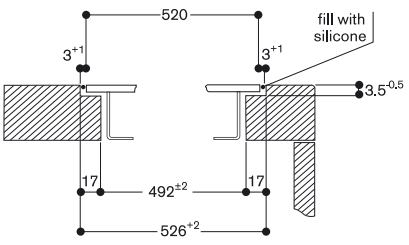

When installing with appliance cover or spacer batten, pay attention to the deeper cut-out and the front and rear groove width.

AjMadison
Your Appliance Authority™
800-570-3355

AA 490 110
Stainless steel

Installation accessories

AA 090 100
Circuit amplifier for connecting two remote fan units

Vario control knob ventilation 400 series
AA 490

- For operation of one remote fan unit AR 400/401/403/413
- In combination with up to four ventilation elements VL 414 connected to one remote fan unit
- Solid stainless steel control knob
- Can be combined perfectly with other Vario appliances of the 400 series

Handling
Control knob with illuminated ring and output marking.

Features
3 electronically controlled output levels.
Intensive mode.
Run-on function.
Sensor-controlled operation of the extractor fan if at least one ventilation element VL 414 is open.

Planning notes
Positioning of the control knob at any location between Vario cooking appliances, see configurations on page 122.
If connecting two remote fan units AR 4.. to ventilation elements VL 414, two control knobs AA 490 must be used.
When installing a ventilation hood with air extraction mode and a chimney-vented fireplace, the hood's power supply line needs a suitable safety switch.
The separate electronics housing is to be installed so that it is accessible.

Connection
Total connected load 365 – 1,040 W.
Connecting cable 1.75 m with plug.

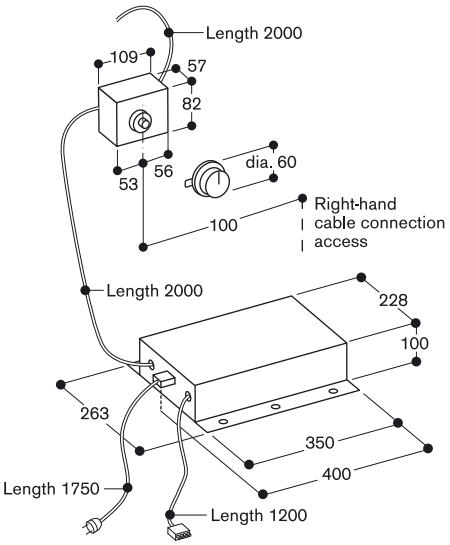

AJMadison
Your Appliance Authority™
800-570-3355

VL 041 114
Stainless steel control panel
Control unit
Air extraction/recirculation with remote fan unit AR 400/401/403/413

VL 040 114
Stainless steel control panel
Expansion elementx
Air extraction/recirculation with remote fan unit AR 400/401/413

VL 041 134
Aluminium control panel
Control unit
Air extraction/recirculation with remote fan unit AR 400/401/403/413

VL 040 134
Aluminium control panel
Expansion elementx
Air extraction/recirculation with remote fan unit AR 400/401/413

Necessary installation accessories

AD 724 040
Connection piece for cylindrical duct DN 125

AD 824 042
Flat duct system with conducting fins
Connection piece VL 041/040 for DN 125 flat rectangular

AD 854 042
Flat duct system with conducting fins
Connection piece VL 041/040 for DN 150 flat rectangular

Installation accessories

AS 070 000
Connection piece for extension in the case of installation next to VK or VF

LS 041 000
Air baffle for VL 040/041 next to gas appliance

VV 200 014
Stainless steel connection strip for combination with further Vario cooktops

VV 200 034
Aluminium connection strip for combination with further Vario cooktops

Installation accessories for the air recirculation ducts you will find at the pages 236–239.

Vario downdraft ventilation 200 series
VL 040/VL 041

- Ventilation element integrated in the worktop
- Highly efficient ventilation system at the cooktop
- Compact ducting in connection with flat rectangular pipes AD 8..
- Minimal planning and easy installation for air recirculation

Output
Maximum air output in combination with remote fan units s. table remote fan units on page 252/253.
Sound power level depends on the built-in situation.

Features
Output control, knob operation.
4 output levels.
Ventilation grille can be washed.
Metal grease filter with grease collecting insert.
No duct connection piece included.

Planning notes
No additional switch necessary.
Air extraction operation in combination with remote fan units AR 400/401/403 or recirculation mode with AR 413.
Please refer to page 228–233 for recommended configurations of downdraft ventilations and remote fan units and the needed ducting elements.
Maximum cooktop width between two VL: 60 cm (exception: VI/VE 270).
If installed next to gas appliances, the air baffle LS 041 000 is recommended to ensure maximum performance of the cooktop. If installed next to gas appliances, flat ducts must not be used for the piping up to the fan unit.
When having installed the air baffle LS 041 000 the wok pan WP 400 001 can not be used.
When installing a ventilation hood with air extraction mode and a chimney-vented fireplace, the hood's power supply line needs a suitable safety switch.
Do not fit in drawer area.
For maximum duct lengths use Gaggenau flat rectangular ducts AD 8... or Naber-System Compair flow. Other flat ducts are not permitted!
Duct connection downwards or sidewards:
DN 125 cylindrical with connection piece AD 724 040.
Optional DN 125/150 flat rectangular duct with connection piece AD 824/854 042 (installation accessory).
Connection of 2 VL with ducting 2x DN 125 cylindrical or 2x DN 125/150 rectangular at remote fan AR 4.. .
For leading through the floor DN 150 cylindrical with connection of 2 DN 125 cylindrical use Y-joint AD 754 044.
Please ensure when installing the exhaust air ducting that no sharp bends are caused and that the cross-section of the ducting is not constricted in any way.
For downdraft configurations with maximum lengths of exhaust air ducts go to Rodun at www.gaggenau.com.
Appliance weight: approx. 4 kg.

Connection
Connecting cable 1.5 m with plug.

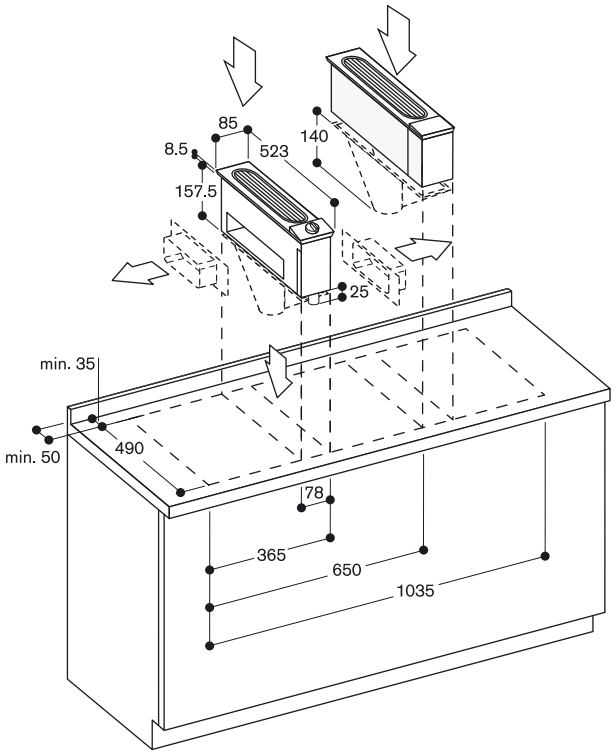

Flat duct pipe connection bottom/left/right
NW 150 using AD 854 042
NW 125 using AD 824 042

Circular duct pipe connection bottom/left/right
NW 125 using AD 724 040

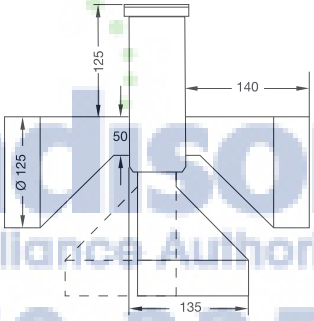

AD 854/824 042

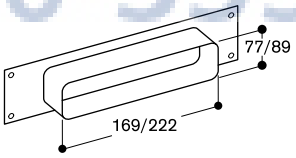

AS 070 000

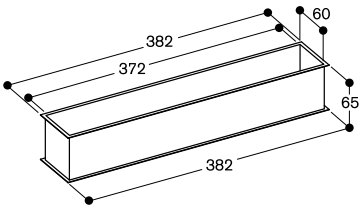

LS 041 000

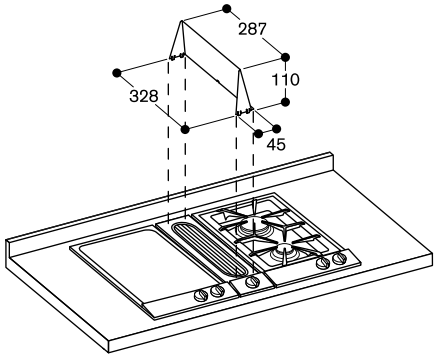

Madison Your Appliance Authority™ 800-570-3355

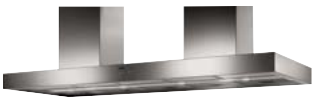

AI 482 180
Stainless steel
Width 180 cm
Air extraction with remote fan unit
AR 400/401
Recirculation with remote fan unit
AR 400
Motorless

Installation accessories

AD 480 016
Exhaust air duct set of two, stainless steel, for ceiling heights 2.30 m - 2.54 m

AD 480 026
Exhaust air duct set of two, stainless steel, for ceiling heights 2.53 m - 2.77 m

AD 480 036
Exhaust air duct set of two, stainless steel, for ceiling heights 2.76 m - 3.00 m

AD 480 396
Ceiling collar for air ducts
Stainless steel
set of 2

Special accessories

AA 480 180
Activated charcoal air filter for AI/AW 480, set of two

Side duct, special ducts
made to measure.
Please enquire about price.

Installation accessories for the air recirculation ducts you will find at the pages 236–239.

Island hood
AI 482

- Two ducts, each for one exhaust duct
- Consistent extraction over the full width
- Operation from both sides
- Dimmable Soft-Light

Output
Maximum air and sound output depending on remote fan unit.

Output ventilation appliances motorless.
See table page 244/245.

Features
Control panel on both sides.
3 electronically controlled output levels.
Intensive mode.
Interval ventilation.
Run-on function.
Grease filter saturation indicator.
Cartridge-type filter, dishwasher-safe.
Dimmable halogen Soft-Light 4 x 20 W.

Planning notes
For calculating the exhaust air line go to Rodun online at www.gaggenau.com.
For maximum duct lengths use Gaggenau flat rectangular ducts AD 8... or Naber-System Compair flow. Other flat ducts are not permitted!
When installing a ventilation hood with air extraction mode and a chimney-vented fireplace, the hood's power supply line needs a suitable safety switch.
Recirculation only in combination with remote fan unit AR400. Consider possibility to refeed cleaned air.
Vario cooktops with intensive production of vapours like VR/VP/VF should be placed in the middle beneath the cooker hood.
Clearance above gas appliances min. 65 cm (more than total load gas 12 kW min. 70 cm).
Clearance above electric appliances min. 55 cm.
Side outlet only possible directly under the ceiling.
Fit the socket concealed behind ventilation duct.
Note the air lines of the two ducts.
Two people are needed for installation.
Weight 77 – 88 kg.
Recommendation for stainless steel parts to match hood that have to be welded and polished: brushed grain 280.
Surfaces: Stainless steel 1.4301, ground and brushed IIIC.
The dimensions of the air ducts refer to a distance of 1.60 m from the floor to the bottom edge of the hood.
Convert for other installation heights: Worktop height + minimum clearance + hood with duct.

Connection
Total connected load 80 W.
Connecting cable 1.3 m with plug.
Plug pair for connecting cable for motorless hood included with the the remote fan unit AR.

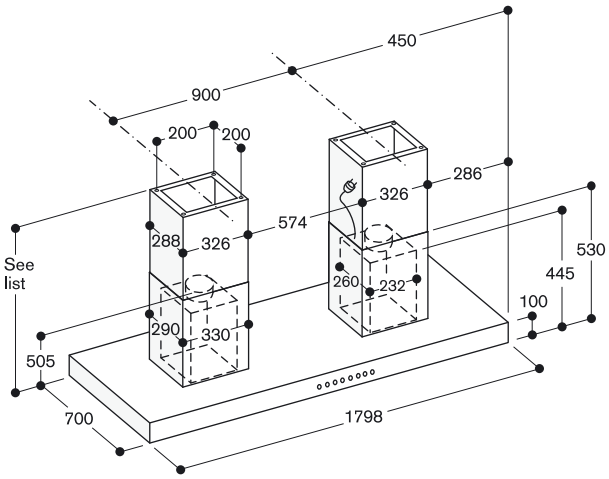

AJMadison
Your Appliance Authority™
800-570-3355

AI 400 120
Stainless steel
Width 120 cm
Air extraction/recirculation

AI 400 150
Stainless steel
Width 150 cm
Air extraction/recirculation

AI 402 120
Stainless steel
Width 120 cm
Air extraction with remote fan unit AR 400/401
Motorless

AI 402 150
Stainless steel
Width 150 cm
Air extraction with remote fan unit AR 400/401
Motorless

Necessary installation accessories

AD 010 016
Exhaust air duct stainless steel, for ceiling heights 2.23 m - 2.41 m

AD 010 026
Exhaust air duct stainless steel, for ceiling heights 2.41 m - 2.73 m

AD 010 036
Exhaust air duct stainless steel, for ceiling heights 2.73 m - 2.99 m

Air recirculation duct for ceiling heigths including air flow in the duct (order activated charcoal filter separately)

AD 010 126
Recirculating air duct stainless steel for ceiling heights 2.41 m - 2.73 m

AD 010 136
Recirculating air duct stainless steel for ceiling heights 2.73 m - 2.99 m

AD 010 396
Ceiling collar for air ducts
Stainless steel

Special accessories

KF 001 010
Activated charcoal filter

Side duct, special ducts
made to measure.
Please enquire about price.

Installation accessories for the air recirculation ducts you will find at the pages 236–239.

Island hood
AI 400/AI 402

- Classic design, high performance
- Highly efficient patented rim extraction
- Planed and easy to clean underside with covered filters
- Air extraction or recirculation system
- Dimmable Soft-Light
- Operation from both sides

Output
Performance and noise level, output level 3/Intensive:
Air output according to DIN EN 61591.
Sound power level according to EN 60704-3.
Sound pressure level according to EN 60704-2-13.

Appliance width 120 cm
Air extraction:
720 / 1,000 m³/h.
62 / 71 dB (A) re 1 pW.
48 / 57 dB (A) re 20 µPa.
Air recirculation:
480 / 500 m³/h.
73 / 75 dB (A) re 1 pW.
59 / 61 dB (A) re 20 µPa.

Appliance width 150 cm
Air extraction:
720 / 1,000 m³/h.
62 / 71 dB (A) re 1 pW.
48 / 57 dB (A) re 20 µPa.
Air recirculation:
480 / 500 m³/h.
73 / 75 dB (A) re 1 pW.
59 / 61 dB (A) re 20 µPa.

Output ventilation appliances motorless.
See table page 244/245.

Features

Control panel on both sides.
3 electronically controlled output levels.
Intensive mode.
Interval ventilation.
Run-on function.
Grease filter saturation indicator.
Rim extraction filter, dishwasher-safe.
Dimmable halogen Soft-Light 3 x 20/4 x 20 W.
Glass cover.

Planning notes
For calculating the exhaust air line go to Rodun online at www.gaggenau.com.
For maximum duct lengths use Gaggenau flat rectangular ducts AD 8... or Naber-System Compair flow. Other flat ducts are not permitted!
When installing a ventilation hood with air extraction mode and a chimney-vented fireplace, the hood's power supply line needs a suitable safety switch.
A large drop in output and significantly increased noise can be expected in the air recirculation mode in the case of ventilation hoods with a very high air output.
Vario cooktops with intensive production of vapours like VR/VP/VF should be placed in the middle beneath the cooker hood (in this case air recirculation is not recommended).
Clearance above gas appliances min. 70 cm.
Clearance above electric appliances min. 60 cm.
Side outlet possible no lower than 47 cm from the bottom edge of the hood (pipe middle).
Fit the socket concealed behind ventilation duct.
Weight 40 – 59 kg.
Recommendation for stainless steel parts to match hood that have to be welded and polished: brushed grain 280.
Surfaces: Stainless steel 1.4016, ground and brushed IIIC.
The dimensions of the air ducts refer to a distance of 1.60 m from the floor to the bottom edge of the hood.
Convert for other installation heights: Worktop height + minimum clearance + hood with duct.

Connection
Total connected load 415/435 W.
Connecting cable 1.5 m with plug.
Plug pair for connecting cable for motorless hood included with the remote fan unit AR.

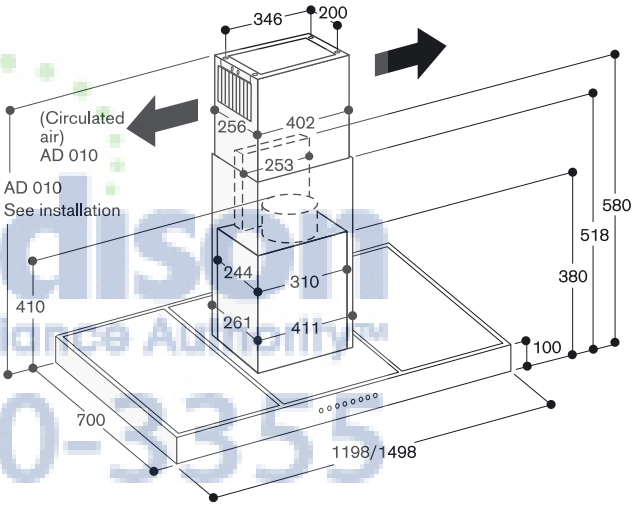

Exhaust air:
AD 010 016 = 630–810
AD 010 026 = 810–1130
AD 010 036 = 1130–1390

Circulated air:
AD 010 126 = 810–1130
AD 010 136= 1130–1390

One-piece upright special duct
in conjunction with ceiling collar on request

AJMadison
Your Appliance Authority
800-570-3355

AI 280 120
Stainless steel
Width 120 cm
Air extraction/recirculation

AI 281 120
Aluminium-lacquered
Width 120 cm
Air extraction/recirculation

Necessary installation accessories

AD 280 016
Exhaust air duct stainless steel, for ceiling heights 2.27 m - 2.44 m

AD 280 026
Exhaust air duct stainless steel, for ceiling heights 2.44 m - 2.76 m

AD 280 036
Exhaust air duct stainless steel, for ceiling heights 2.76 m - 2.98 m

AD 281 016
Exhaust air duct aluminium-lacquered, for ceiling heights 2.27 m - 2.44 m

AD 281 026
Exhaust air duct aluminium-lacquered, for ceiling heights 2.44 m - 2.76 m

AD 281 036
Exhaust air duct aluminium-lacquered, for ceiling heights 2.76 m - 2.98 m

Air recirculation duct for ceiling heigths including air flow in the duct (order activated charcoal filter separately)

AD 280 126
Recirculating air duct stainless steel for ceiling heights 2.44 m - 2.76 m

AD 280 136
Recirculating air duct stainless steel for ceiling heights 2.76 m - 2.98 m

AD 281 126
Recirculating air duct aluminium-lacquered for ceiling heights 2.44 m - 2.76 m

AD 281 136
Recirculating air duct aluminium-lacquered for ceiling heights 2.76 m - 2.98 m

AD 280 396
Ceiling collar for air ducts
Stainless steel

AD 281 396
Ceiling collar for air ducts
Aluminium-lacquered

Special accessories

KF 001 010
Activated charcoal filter

Side duct, special ducts
made to measure. For production reasons, aluminium-lacquered ducts have a longer delivery time.
Please enquire about price.

Installation accessories for the air recirculation ducts you will find at the pages 236–239.

Island hood
AI 280/AI 281

- Coanda effect on both sides leads to highly efficient extraction, even on lowest power level
- Air extraction or recirculation system
- Dimmable Soft-Light
- Operation from both sides

Output
Performance and noise level, output level 3/Intensive:
Air output according to DIN EN 61591.
Sound power level according to EN 60704-3.
Sound pressure level according to EN 60704-2-13.

Appliance width 120 cm
Air extraction:
470 / 640 m³/h + Coanda effect
120 / 120 m³/h.
63 / 70 dB (A) re 1 pW.
49 / 55 dB (A) re 20 µPa.
Air recirculation:
240 / 260 m³/h + Coanda effect
80 / 80 m³/h.
68 / 75 dB (A) re 1 pW.
54 / 60 dB (A) re 20 µPa.

Features
Control panel on both sides.
3 electronically controlled output levels.
Intensive mode with ongoing Coanda effect.
Interval ventilation.
Run-on function.
Grease filter saturation indicator.
Cartridge-type filter, dishwasher-safe.
Fully illuminated surface with compact fluorescent tube 2 x 36 W and dimmable Soft-Light.

Planning notes
For calculating the exhaust air line go to Rodun online at www.gaggenau.com.
For maximum duct lengths use Gaggenau flat rectangular ducts AD 8... or Naber-System Compair flow. Other flat ducts are not permitted!
When installing a ventilation hood with air extraction mode and a chimney-vented fireplace, the hood's power supply line needs a suitable safety switch.
A large drop in output and significantly increased noise can be expected in the air recirculation mode in the case of ventilation hoods with a very high air output.
Vario cooktops with intensive production of vapours like VR/VP/VF should be placed in the middle beneath the cooker hood (in this case air recirculation is not recommended).
Clearance above gas appliances min. 65 cm (more than total load gas 12 kW min. 70 cm).
Clearance above electric appliances min. 55 cm.
Side outlet possible no lower than 58 cm from the bottom edge of the hood (pipe middle).
Fit the socket concealed behind ventilation duct.
Weight 41- 45 kg.

Recommendation for stainless steel parts to match hood that have to be welded and polished: brushed grain 280.
Surfaces: Stainless steel 1.4016, ground and brushed IIIC.
Recommendation for aluminium parts to match hood: RAL 9006 white-aluminium or request a paint sample.
The dimensions of the air ducts refer to a distance of 1.60 m from the floor to the bottom edge of the hood.
Convert for other installation heights: Worktop height + minimum clearance + hood with duct.

Connection
Total connected load 335/335 W.
Connecting cable 1.4 m with plug.

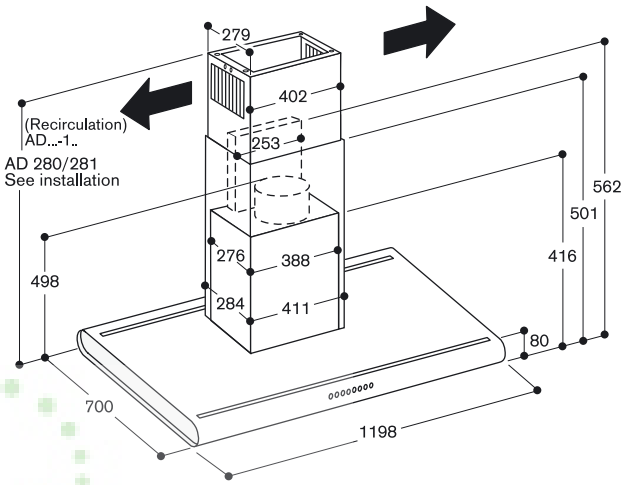

Air extraction:
AD 280/281 016 = 670-840 mm
AD 280/281 026 = 840-1160 mm
AD 280/281 036 = 1160-1380 mm

Recirculation:
AD 280/281 126 = 840-1160 mm
AD 280/281 136 = 1160-1380 mm

One-piece upright special duct in conjunction with ceiling collar on request

AJMadison
Your Appliance Authority™
800-570-3355

AI 220 190
Stainless steel
Width 90 cm
Air extraction/recirculation

AI 220 100
Stainless steel
Width 100 cm
Air extraction/recirculation

AI 220 120
Stainless steel
Width 120 cm
Air extraction/recirculation

AI 221 100
Aluminium-lacquered
Width 100 cm
Air extraction/recirculation

AI 221 120
Aluminium-lacquered
Width 120 cm
Air extraction/recirculation

Installation accessories

Universal ducts for air extraction or recirculation (order starter set for air recirculation separately)

AD 220 316
Universal duct
Stainless steel
For ceiling heigths
Air extraction 2.25 m - 2.57 m
Air recirculation 2.25 m - 2.67 m

AD 220 326
Universal duct
Stainless steel
For ceiling heigths
Air extraction 2.77 m - 3.09 m
Air recirculation 2.77 m - 3.19 m

AD 221 316
Universal duct
Aluminium-lacquered
For ceiling heigths
Air extraction 2.25 m - 2.57 m
Air recirculation 2.25 m - 2.67 m

AD 221 326
Universal duct
Aluminium-lacquered
For ceiling heigths
Air extraction 2.77 m - 3.09 m
Air recirculation 2.77 m - 3.19 m

Intermediate heights have to be made by cutting the lower edge of the inner duct.

AD 220 396
Ceiling collar for air ducts
Stainless steel

AD 221 396
Ceiling collar for air ducts
Aluminium-lacquered

Special accessories

AA 220 110
Activated charcoal filter

AD 220 186
Starter set air recirculation with air flow in the duct and activated charcoal filter

Side duct, special ducts
made to measure. For production reasons, aluminium-lacquered ducts have a longer delivery time.
Please enquire about price.

Installation accessories for the air recirculation ducts you will find at the pages 236–239.

Island hood
AI 220/AI 221

- Sturdy design
- Highly efficient patented rim extraction
- Planed and easy to clean underside with covered filters
- Air extraction or recirculation system
- Dimmable Soft-Light

Output
Performance and noise level, output level 3/Intensive:
Air output according to DIN EN 61591.
Sound power level according to EN 60704-3.
Sound pressure level according to EN 60704-2-13.

Appliance width 90 cm
Air extraction:
540 / 730 m³/h.
56 / 65 dB (A) re 1 pW.
42 / 51 dB (A) re 20 µPa.
Air recirculation:
390 / 460 m³/h.
68 / 72 dB (A) re 1 pW.
54 / 58 dB (A) re 20 µPa.

Appliance width 100 cm
Air extraction:
540 / 730 m³/h.
56 / 65 dB (A) re 1 pW.
42 / 51 dB (A) re 20 µPa.
Air recirculation:
390 / 460 m³/h.
68 / 72 dB (A) re 1 pW.
54 / 58 dB (A) re 20 µPa.

Appliance width 120 cm
Air extraction:
620 / 800 m³/h.
59 / 65 dB (A) re 1 pW.
45 / 51 dB (A) re 20 µPa.
Air recirculation:
420 / 480 m³/h.
70 / 73 dB (A) re 1 pW.
56 / 59 dB (A) re 20 µPa.

Features
3 electronically controlled output levels.
Intensive mode.
Interval ventilation.
Run-on function.
Grease filter saturation indicator.
Rim extraction filter, dishwasher-safe.
Dimmable halogen Soft-Light 4 x 20 W.

Planning notes
For calculating the exhaust air line go to Rodun online at www.gaggenau.com.
For maximum duct lengths use Gaggenau flat rectangular ducts AD 8... or Naber-System Compair flow. Other flat ducts are not permitted!
When installing a ventilation hood with air extraction mode and a chimney-vented fireplace, the hood's power supply line needs a suitable safety switch.
A large drop in output and significantly increased noise can be expected in the air recirculation mode in the case of ventilation hoods with a very high air output.
Vario cooktops with intensive production of vapours like VR/VP/VF should be placed in the middle beneath the cooker hood (in this case air recirculation is not recommended).

Clearance above gas appliances min. 65 cm (more than total load gas 12 kW min. 70 cm).
Clearance above electric appliances min. 55 cm.
Side outlet possible no lower than 55 cm from the bottom edge of the hood (pipe middle).
Fit the socket concealed behind ventilation duct.
Weight 37 – 48 kg.
Recommendation for stainless steel parts to match hood that have to be welded and polished: brushed grain 280.
Surfaces: Stainless steel 1.4016, ground and brushed IIIC.
Recommendation for aluminium parts to match hood: RAL 9006 white-aluminium or request a paint sample.
The dimensions of the air ducts refer to a distance of 1.60 m from the floor to the bottom edge of the hood.
Convert for other installation heights: Worktop height + minimum clearance + hood with duct.

Connection
Total connected load 295/295/340/295/340 W.
Connecting cable 1.3 m with plug.

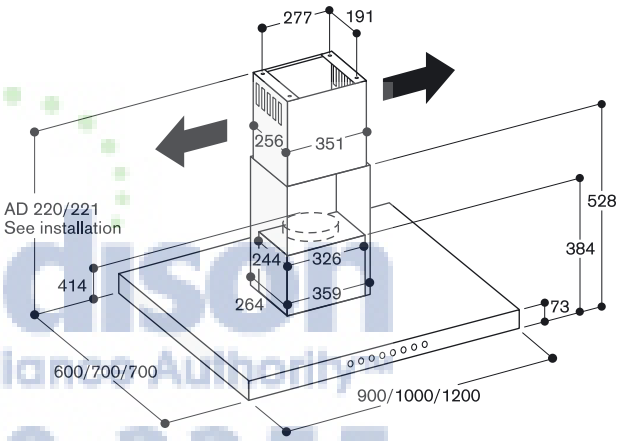

Air extraction:
AD 220/221 316 = 653-967 mm
AD 220/221 326 = 1173-1487 mm

Recirculation:
AD 220/221 316 = 653-1073 mm
AD 220/221 326 = 1173-1593 mm

One-piece upright special duct
in conjunction with ceiling collar on request

Madison Your Appliance Authority 800-570-3355

AI 200 102
Stainless steel
Width 100 cm
Air extraction/recirculation

AI 201 102
Aluminium-lacquered
Width 100 cm
Air extraction/recirculation

AI 202 102
Stainless steel
Width 100 cm
Air extraction with remote fan unit AR 400/401
Motorless

AI 203 102
Aluminium-lacquered
Width 100 cm
Air extraction with remote fan unit AR 400/401
Motorless

Necessary installation accessories

AD 010 016
Exhaust air duct stainless steel, for ceiling heights 2.23 m - 2.41 m

AD 010 026
Exhaust air duct stainless steel, for ceiling heights 2.41 m - 2.73 m

AD 010 036
Exhaust air duct stainless steel, for ceiling heights 2.73 m - 2.99 m

AD 011 016
Exhaust air duct aluminium-lacquered, for ceiling heights 2.23 m - 2.41 m

AD 011 026
Exhaust air duct aluminium-lacquered, for ceiling heights 2.41 m - 2.73 m

AD 011 036
Exhaust air duct aluminium-lacquered, for ceiling heights 2.73 m - 2.99 m

Air recirculation duct for ceiling heigths including air flow in the duct (order activated charcoal filter separately)

AD 010 126
Recirculating air duct stainless steel for ceiling heights 2.41 m - 2.73 m

AD 010 136
Recirculating air duct stainless steel for ceiling heights 2.73 m - 2.99 m

AD 011 126
Recirculating air duct aluminium-lacquered for ceiling heights 2.41 m - 2.73 m

AD 011 136
Recirculating air duct aluminium-lacquered for ceiling heights 2.73 m - 2.99 m

AD 010 396
Ceiling collar for air ducts
Stainless steel

AD 011 396
Ceiling collar for air ducts
Aluminium-lacquered

Special accessories

KF 001 010
Activated charcoal filter

Side duct, special ducts
made to measure. For production reasons, aluminium-lacquered ducts have a longer delivery time.
Please enquire about price.

Island hood
AI 200/AI 201/AI 202/AI 203

- Classic Gaggenau design
- Air extraction or recirculation system
- Especially quiet with high performance

Output
Performance and noise level, output level 3/Intensive:
Air output according to DIN EN 61591.
Sound power level according to EN 60704-3.
Sound pressure level according to EN 60704-2-13.

Appliance width 100 cm
Air extraction:
520 / 750 m³/h.
61 / 68 dB (A) re 1 pW.
47 / 54 dB (A) re 20 µPa.
Air recirculation:
400 / 470 m³/h.
71 / 74 dB (A) re 1 pW.
57 / 60 dB (A) re 20 µPa.

Output ventilation appliances motorless.
See table page 244/245.

Features

3 electronically controlled output levels.
Intensive mode.
Interval ventilation.
Run-on function.
Grease filter saturation indicator.
Cartridge-type filter, dishwasher-safe.
Dimmable halogen Soft-Light 4 x 20

Planning notes
For calculating the exhaust air line go to Rodun online at www.gaggenau.com.
For maximum duct lengths use Gaggenau flat rectangular ducts AD 8... or Naber-System Compair flow. Other flat ducts are not permitted!
When installing a ventilation hood with air extraction mode and a chimney-vented fireplace, the hood's power supply line needs a suitable safety switch.
A large drop in output and significantly increased noise can be expected in the air recirculation mode in the case of ventilation hoods with a very high air output.
Vario cooktops with intensive production of vapours like VR/VP/VF should be placed in the middle beneath the cooker hood (in this case air recirculation is not recommended).
Clearance above gas appliances min. 65 cm (more than total load gas 12 kW min. 70 cm).
Clearance above electric appliances min. 60 cm.
Side outlet possible no lower than 48 cm from the bottom edge of the hood (pipe middle).
Fit the socket concealed behind ventilation duct.
Weight 24 kg.
Recommendation for stainless steel parts to match hood that have to be welded and polished: brushed grain 280.
Surfaces: Stainless steel 1.4016, ground and brushed IIIC.
Recommendation for aluminium parts to match hood: RAL 9006 white-aluminium or request a paint sample.

Installation accessories for the air recirculation ducts you will find at the pages 236–239.

The dimensions of the air ducts refer to a distance of 1.60 m from the floor to the bottom edge of the hood.
Convert for other installation heights: Worktop height + minimum clearance + hood with duct.

Connection
Total connected load 295/295 W.
Connecting cable 1.5 m with plug.
Plug pair for connecting cable for motorless hood included with the remote fan unit AR.

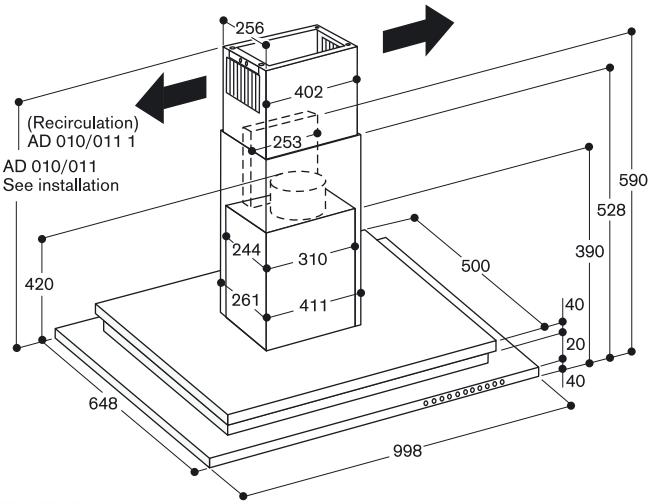

Air extraction:
AD 010 016 = 630-810 mm
AD 010 026 = 810-1130 mm
AD 010 036 = 1130-1390 mm

Recirculation:
AD 010 126 = 810-1130 mm
AD 010 136 = 1130-1390 mm

One-piece upright special duct in conjunction with ceiling collar on request

AJMadison
New Appliance Authority™
800-570-3355

AW 482 180
Stainless steel
Width 180 cm
Air extraction with remote fan unit AR 400/401
Recirculation with remote fan unit AR 400
Motorless

Installation accessories

AD 480 012
Exhaust air duct set of two, stainless steel, for ceiling heights 2.30 m - 2.70 m

AD 480 022
Exhaust air duct set of two, stainless steel, for ceiling heights 2.60 m - 3.00 m

AD 480 392
Ceiling collar for air ducts
Stainless steel
set of 2

Special accessories

AA 480 180
Activated charcoal air filter for AI/AW 480, set of two

Side duct, special ducts
made to measure.
Please enquire about price.

Installation accessories for the air recirculation ducts you will find at the pages 236–239.

Wall-mounted hood
AW 482

- Two ducts, each for one exhaust duct
- Consistent extraction over the full width

Output
Maximum air and sound output depending on remote fan unit.

Output ventilation appliances motorless.
See table page 246/247.

Features
3 electronically controlled output levels.
Intensive mode.
Interval ventilation.
Run-on function.
Grease filter saturation indicator.
Cartridge-type metal filter, dishwasher-safe.
Dimmable halogen Soft-Light 4 x 20 W.

Planning notes
For calculating the exhaust air line go to Rodun online at www.gaggenau.com.
For maximum duct lengths use Gaggenau flat rectangular ducts AD 8... or Naber-System Compair flow. Other flat ducts are not permitted!
When installing a ventilation hood with air extraction mode and a chimney-vented fireplace, the hood's power supply line needs a suitable safety switch.
Recirculation only in combination with remote fan unit AR400. Consider possibility to refeed cleaned air.
Vario cooktops with intensive production of vapours like VR/VP/VF should be placed in the middle beneath the cooker hood.
Clearance above gas appliances min. 65 cm (more than total load gas 12 kW min. 70 cm).
Clearance above electric appliances min. 55 cm.
Side outlet only possible directly under the ceiling.
Fit the socket concealed behind ventilation duct.
Note the air lines of the two ducts.
Two people are needed for installation.
Weight 77 – 88 kg.
Recommendation for stainless steel parts to match hood that have to be welded and polished: brushed grain 280.
Surfaces: Stainless steel 1.4301, ground and brushed IIIC.
The dimensions of the air ducts refer to a distance of 1.60 m from the floor to the bottom edge of the hood.
Convert for other installation heights: Worktop height + minimum clearance + hood with duct.

Connection
Total connected load 80 W.
Connecting cable 1.3 m with plug.
Plug pair for connecting cable for motorless hood included with the the remote fan unit AR.

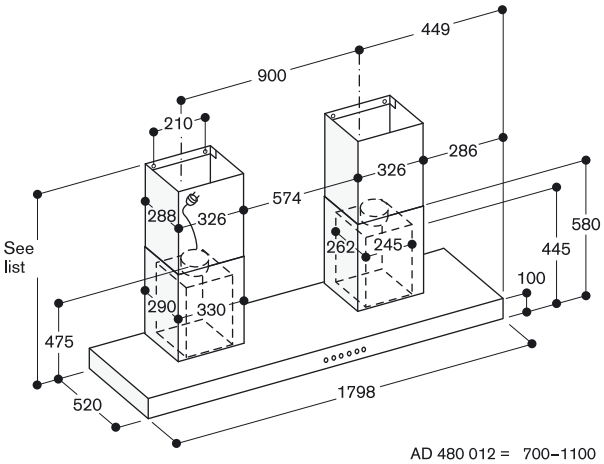

AD 480 012 = 700–1100
AD 480 022 = 1000–1400

Madison Appliance Authority™
800-570-3355

AW 400 190
Stainless steel
Width 90 cm
Air extraction/recirculation

AW 400 120
Stainless steel
Width 120 cm
Air extraction/recirculation

AW 400 150
Stainless steel
Width 150 cm
Air extraction/recirculation

AW 402 190
Stainless steel
Width 90 cm
Air extraction with remote fan unit AR 400/401
Motorless

AW 402 120
Stainless steel
Width 120 cm
Air extraction with remote fan unit AR 400/401
Motorless

AW 402 150
Stainless steel
Width 150 cm
Air extraction with remote fan unit AR 400/401
Motorless

Necessary installation accessories

AD 010 012
Exhaust air duct stainless steel, for ceiling heights 2.25 m - 2.64 m

AD 010 022
Exhaust air duct stainless steel, for ceiling heights 2.64 m - 3.02 m

Air recirculation duct for ceiling heigths including air flow in the duct (order activated charcoal filter separately)

AD 010 112
Recirculating air duct stainless steel for ceiling heights 2.36 m - 2.64 m

AD 010 122
Recirculating air duct stainless steel for ceiling heights 2.64 m - 3.02 m

AD 010 392
Ceiling collar for air ducts
Stainless steel

Special accessories

KF 001 010
Activated charcoal filter

Side duct, special ducts
made to measure.
Please enquire about price.

Installation accessories for the air recirculation ducts you will find at the pages 236–239.

Wall-mounted hood
AW 400/AW 402

- Classic design, high performance
- Highly efficient patented rim extraction
- Planed and easy to clean underside with covered filters
- Air extraction or recirculation system
- Dimmable Soft-Light

Output

Performance and noise level, output level 3/Intensive:
Air output according to DIN EN 61591.
Sound power level according to EN 60704-3.
Sound pressure level according to EN 60704-2-13.

Appliance width 90 cm
Air extraction:
520 / 740 m³/h.
57 / 66 dB (A) re 1 pW.
43 / 52 dB (A) re 20 µPa.
Air recirculation:
400 / 470 m³/h.
69 / 71 dB (A) re 1 pW.
55 / 57 dB (A) re 20 µPa.

Appliance width 120 cm
Air extraction:
580 / 800 m³/h.
59 / 70 dB (A) re 1 pW.
45 / 56 dB (A) re 20 µPa.
Air recirculation:
420 / 490 m³/h.
71 / 75 dB (A) re 1 pW.
57 / 61 dB (A) re 20 µPa.

Appliance width 150 cm
Air extraction:
580 / 800 m³/h.
59 / 70 dB (A) re 1 pW.
45 / 56 dB (A) re 20 µPa.
Air recirculation:
420 / 490 m³/h.
71 / 75 dB (A) re 1 pW.
57 / 61 dB (A) re 20 µPa.

Output ventilation appliances motorless.
See table page 246/247.

Features

3 electronically controlled output levels.
Intensive mode.
Interval ventilation.
Run-on function.
Grease filter saturation indicator.
Rim extraction filter, dishwasher-safe.
Dimmable halogen Soft-Light 3 x 20/3 x 20/4 x 20/3 x 20/3 x 20/3 x 20 W.
Glass cover.

Planning notes

For calculating the exhaust air line go to Rodun online at www.gaggenau.com.
For maximum duct lengths use Gaggenau flat rectangular ducts AD 8... or Naber-System Compair flow. Other flat ducts are not permitted!
When installing a ventilation hood with air extraction mode and a chimney-vented fireplace, the hood's power supply line needs a suitable safety switch.
A large drop in output and significantly increased noise can be expected in the air recirculation mode in the case of ventilation hoods with a very high air output.
Vario cooktops with intensive production of vapours like VR/VP/VF should be placed in the middle beneath the cooker hood (in this case air recirculation is not recommended).
Clearance above gas appliances min. 70 cm.
Clearance above electric appliances min. 60 cm.
Side outlet possible no lower than 55 cm from the bottom edge of the hood (pipe middle).
Fit the socket concealed behind ventilation duct.
Weight 24 – 40 kg.
Recommendation for stainless steel parts to match hood that have to be welded and polished: brushed grain 280.
Surfaces: Stainless steel 1.4016, ground and brushed IIIC.
The dimensions of the air ducts refer to a distance of 1.60 m from the floor to the bottom edge of the hood.
Convert for other installation heights: Worktop height + minimum clearance + hood with duct.

Connection

Total connected load 275/320/340 W.
Connecting cable 1.5 m with plug.
Plug pair for connecting cable for motorless hood included with the remote fan unit AR.

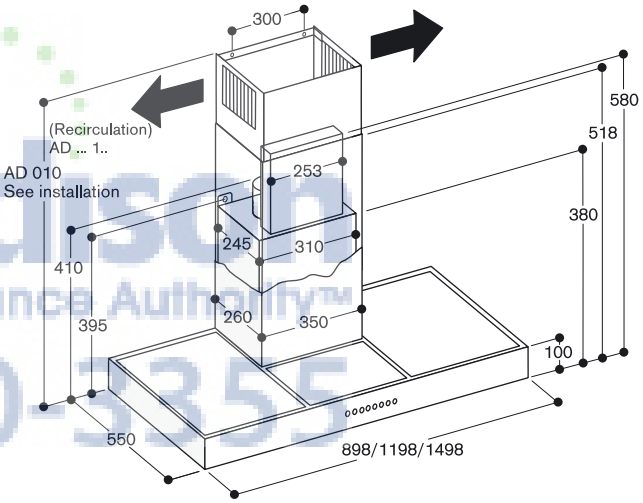

Air extraction:
AD 010 012 = 650-1040 mm
AD 010 022 = 1040-1420 mm

Recirculation:
AD 010 112 = 760-1040 mm
AD 010 122 = 1040-1420 mm

One-piece special duct
in conjunction with ceiling collar on request

AMadison
Your Appliance Authority™
800-570-3355

AW 280 190
Stainless steel
Width 90 cm
Air extraction/recirculation

AW 280 120
Stainless steel
Width 120 cm
Air extraction/recirculation

AW 281 190
Aluminium-lacquered
Width 90 cm
Air extraction/recirculation

AW 281 120
Aluminium-lacquered
Width 120 cm
Air extraction/recirculation

Necessary installation accessories

AD 280 012
Exhaust air duct stainless steel, for ceiling heights 2.25 m - 2.62 m

AD 280 022
Exhaust air duct stainless steel, for ceiling heights 2.62 m - 3.01 m

AD 281 012
Exhaust air duct aluminium-lacquered, for ceiling heights 2.25 m - 2.62 m

AD 281 022
Exhaust air duct aluminium-lacquered, for ceiling heights 2.62 m - 3.01 m

Air recirculation duct for ceiling heigths including air flow in the duct (order activated charcoal filter separately)

AD 280 112
Recirculating air duct stainless steel for ceiling heights 2.36 m - 2.62 m

AD 280 122
Recirculating air duct stainless steel for ceiling heights 2.62 m - 3.01 m

AD 281 112
Recirculating air duct aluminium-lacquered for ceiling heights 2.36 m - 2.62 m

AD 281 122
Recirculating air duct aluminium-lacquered for ceiling heights 2.62 m - 3.01 m

AD 010 392
Ceiling collar for air ducts
Stainless steel

AD 011 392
Ceiling collar for air ducts
Aluminium-lacquered

Special accessories

KF 001 010
Activated charcoal filter

Side duct, special ducts
made to measure. For production reasons, aluminium-lacquered ducts have a longer delivery time.
Please enquire about price.

Installation accessories for the air recirculation ducts you will find at the pages 236–239.

product design award 2008

Wall-mounted hood
AW 280/AW 281

- Coanda effect leads to highly efficient extraction, even on lowest power level
- Reduced energy consumption and less noise
- Air extraction or recirculation system
- Dimmable Soft-Light

Output
Performance and noise level, output level 3/Intensive:
Air output according to DIN EN 61591.
Sound power level according to EN 60704-3.
Sound pressure level according to EN 60704-2-13.

Appliance width 90 cm
Air extraction:
440 / 600 m³/h + Coanda effect
80 / 80 m³/h.
61 / 69 dB (A) re 1 pW.
47 / 54 dB (A) re 20 µPa.
Air recirculation:
250 / 300 m³/h + Coanda effect
100 / 100 m³/h.
70 / 72 dB (A) re 1 pW.
56 / 60 dB (A) re 20 µPa.

Appliance width 120 cm
Air extraction:
450 / 610 m³/h + Coanda effect
80 / 80 m³/h.
61 / 69 dB (A) re 1 pW.
47 / 54 dB (A) re 20 µPa.
Air recirculation:
250 / 300 m³/h + Coanda effect
100 / 100 m³/h.
70 / 72 dB (A) re 1 pW.
56 / 60 dB (A) re 20 µPa.

Features
3 electronically controlled output levels.
Intensive mode with ongoing Coanda effect.
Interval ventilation.
Run-on function.
Grease filter saturation indicator.
Cartridge-type filter, dishwasher-safe.
Fully illuminated surface with compact fluorescent tube 2 x 36 W and dimmable Soft-Light.

Planning notes
For calculating the exhaust air line go to Rodun online at www.gaggenau.com.
For maximum duct lengths use Gaggenau flat rectangular ducts AD 8... or Naber-System Compair flow. Other flat ducts are not permitted!
When installing a ventilation hood with air extraction mode and a chimney-vented fireplace, the hood's power supply line needs a suitable safety switch.
A large drop in output and significantly increased noise can be expected in the air recirculation mode in the case of ventilation hoods with a very high air output.
Vario cooktops with intensive production of vapours like VR/VP/VF should be placed in the middle beneath the cooker hood (in this case air recirculation is not recommended).
Clearance above gas appliances min. 70 cm.
Clearance above electric appliances min. 60 cm.
Side outlet possible no lower than 58 cm from the bottom edge of the hood (pipe middle).
Fit the socket concealed behind ventilation duct.
Weight 29 – 35 kg.
Recommendation for stainless steel parts to match hood that have to be welded and polished: brushed grain 280.
Surfaces: Stainless steel 1.4016, ground and brushed IIIC.
Recommendation for aluminium parts to match hood: RAL 9006 white-aluminium or request a paint sample.
The dimensions of the air ducts refer to a distance of 1.60 m from the floor to the bottom edge of the hood.
Convert for other installation heights: Worktop height + minimum clearance + hood with duct.

Connection
Total connected load 295/295 W.
Connecting cable 1.4 m with plug.

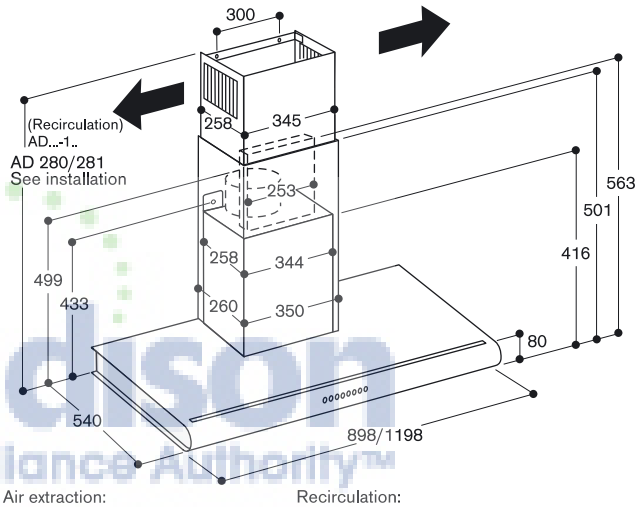

Air extraction:
AD 280/281 012 = 650–1,020 mm
AD 280/281 022 = 1020–1410 mm

Recirculation:
AD 280/281 112 = 760–1020 mm
AD 280/281 122 = 1020–1410 mm

One-piece special duct
in conjunction with ceiling collar on request

AMadison Your Appliance Authority™ 800-570-9355

AW 220 170
Stainless steel
Width 70 cm
Air extraction/recirculation

AW 220 190
Stainless steel
Width 90 cm
Air extraction/recirculation

AW 220 120
Stainless steel
Width 120 cm
Air extraction/recirculation

AW 221 170
Aluminium-lacquered
Width 70 cm
Air extraction/recirculation

AW 221 190
Aluminium-lacquered
Width 90 cm
Air extraction/recirculation

AW 221 120
Aluminium-lacquered
Width 120 cm
Air extraction/recirculation

Installation accessories

Universal ducts for air extraction or recirculation (order starter set for air recirculation separately)

AD 220 312
Universal duct
Stainless steel
For ceiling heigths
Air extraction 2.25 m - 2.59 m
Air recirculation 2.25 m - 2.70 m

AD 220 322
Universal duct
Stainless steel
For ceiling heigths
Air extraction 2.67 m - 3.01 m
Air recirculation 2.67 m - 3.12 m

AD 221 312
Universal duct
Aluminium-lacquered
For ceiling heigths
Air extraction 2.25 m - 2.59 m
Air recirculation 2.25 m - 2.70 m

AD 221 322
Universal duct
Aluminium-lacquered
For ceiling heigths
Air extraction 2.67 m - 3.01 m
Air recirculation 2.67 m - 3.12 m

Intermediate heights have to be made by cutting the lower edge of the inner duct.

AD 220 392
Ceiling collar for air ducts
Stainless steel

AD 221 392
Ceiling collar for air ducts
Aluminium-lacquered

Special accessories

AA 220 110
Activated charcoal filter

AD 220 182
Starter set air recirculation with air flow in the duct and activated charcoal filter

Side duct, special ducts
made to measure. For production reasons, aluminium-lacquered ducts have a longer delivery time.
Please enquire about price.

Wall-mounted hood
AW 220/AW 221

- Sturdy design
- Highly efficient patented rim extraction
- Planed and easy to clean underside with covered filters
- Air extraction or recirculation system
- Dimmable Soft-Light

Output
Performance and noise level, output level 3/Intensive:
Air output according to DIN EN 61591.
Sound power level according to EN 60704-3.
Sound pressure level according to EN 60704-2-13.

Appliance width 70 cm
Air extraction:
510 / 720 m³/h.
58 / 64 dB (A) re 1 pW.
44 / 50 dB (A) re 20 µPa.
Air recirculation:
380 / 440 m³/h.
68 / 71 dB (A) re 1 pW.
54 / 57 dB (A) re 20 µPa.

Appliance width 90 cm
Air extraction:
510 / 720 m³/h.
58 / 64 dB (A) re 1 pW.
44 / 50 dB (A) re 20 µPa.
Air recirculation:
380 / 440 m³/h.
68 / 71 dB (A) re 1 pW.
54 / 57 dB (A) re 20 µPa.

Appliance width 120 cm
Air extraction:
510 / 720 m³/h.
58 / 64 dB (A) re 1 pW.
44 / 50 dB (A) re 20 µPa.
Air recirculation:
380 / 440 m³/h.
68 / 71 dB (A) re 1 pW.
54 / 57 dB (A) re 20 µPa.

Features
3 electronically controlled output levels.
Intensive mode.
Interval ventilation.
Run-on function.
Grease filter saturation indicator.
Rim extraction filter, dishwasher-safe.
Dimmable halogen Soft-Light 2 x 20/3 x 20/4 x 20 W.
Quick-mounting system for convenient and exact horizontal balance of the hood.

Planning notes
For calculating the exhaust air line go to Rodun online at www.gaggenau.com.
For maximum duct lengths use Gaggenau flat rectangular ducts AD 8... or Naber-System Compair flow. Other flat ducts are not permitted!
When installing a ventilation hood with air extraction mode and a chimney-vented fireplace, the hood's power supply line needs a suitable safety switch.
Vario cooktops with intensive production of vapours like VR/VP/VF should be placed in the middle beneath the cooker hood (in this case air recirculation is not recommended).

Installation accessories for the air recirculation ducts you will find at the pages 236–239.

Clearance above gas appliances min. 65 cm (more than total load gas 12 kW min. 70 cm).
Clearance above electric appliances min. 55 cm.
Side outlet possible no lower than 62.5 cm from the bottom edge of the hood (pipe middle).
Fit the socket concealed behind ventilation duct.
Weight 20 – 38 kg.
Recommendation for stainless steel parts to match hood that have to be welded and polished: brushed grain 280.
Surfaces: Stainless steel 1.4016, ground and brushed IIIC.
Recommendation for aluminium parts to match hood: RAL 9006 white-aluminium or request a paint sample.
The dimensions of the air ducts refer to a distance of 1.60 m from the floor to the bottom edge of the hood.
Convert for other installation heights: Worktop height + minimum clearance + hood with duct.

Connection
Total connected load 255/275/295 W.
Connecting cable 1.3 m with plug.

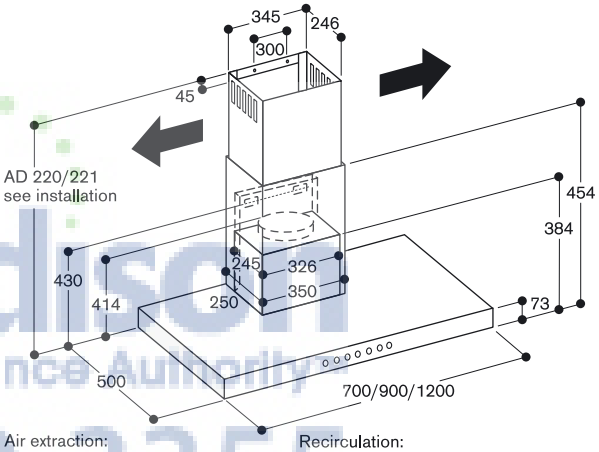

Air extraction:
AD 220/221 312 = 653-988mm
AD 220/221 322 = 1,073-1,408mm

Recirculation:
AD 220/221 312 = 653-1,098mm
AD 220/221 322 = 1,173-1,518mm

One-piece special duct in conjunction with ceiling collar on request

AMadison
Your Appliance Authority
800-570-0355

AW 200 172
Stainless steel
Width 70 cm, depth 56 cm
Air extraction/recirculation

AW 200 192
Stainless steel
Width 90 cm, depth 56 cm
Air extraction/recirculation

AW 202 192
Stainless steel
Width 90 cm, depth 56 cm
Air extraction with remote fan unit AR 400/401
Motorless

AW 200 120
Stainless steel
Width 120 cm, depth 56 cm
Air extraction/recirculation

AW 201 172
Aluminium-lacquered
Width 70 cm, depth 56 cm
Air extraction/recirculation

AW 201 192
Aluminium-lacquered
Width 90 cm, depth 56 cm
Air extraction/recirculation

Necessary installation accessories

AD 010 012
Exhaust air duct stainless steel, for ceiling heights 2.25 m - 2.64 m

AD 010 022
Exhaust air duct stainless steel, for ceiling heights 2.64 m - 3.02 m

AD 011 012
Exhaust air duct aluminium-lacquered, for ceiling heights 2.25 m - 2.64 m

AD 011 022
Exhaust air duct aluminium-lacquered, for ceiling heights 2.64 m - 3.02 m

Air recirculation duct for ceiling heigths including air flow in the duct (order activated charcoal filter separately)

AD 010 112
Recirculating air duct stainless steel for ceiling heights 2.36 m - 2.64 m

AD 010 122
Recirculating air duct stainless steel for ceiling heights 2.64 m - 3.02 m

AD 011 112
Recirculating air duct aluminium-lacquered for ceiling heights 2.36 m - 2.64 m

AD 011 122
Recirculating air duct aluminium-lacquered for ceiling heights 2.64 m - 3.02 m

AD 010 392
Ceiling collar for air ducts
Stainless steel

AD 011 392
Ceiling collar for air ducts
Aluminium-lacquered

Special accessories

KF 001 010
Activated charcoal filter

Side duct, special ducts
made to measure. For production reasons, aluminium-lacquered ducts have a longer delivery time.
Please enquire about price.

Wall-mounted hood
AW 200/AW 201/AW 202

- Classic Gaggenau design
- Air extraction or recirculation system
- Especially quiet with high performance

Output
Performance and noise level, output level 3/Intensive:
Air output according to DIN EN 61591.
Sound power level according to EN 60704-3.
Sound pressure level according to EN 60704-2-13.

Appliance width 70 cm
Air extraction:
450 / 650 m³/h.
57 / 65 dB (A) re 1 pW.
43 / 51 dB (A) re 20 µPa.
Air recirculation:
340 / 430 m³/h.
66 / 71 dB (A) re 1 pW.
52 / 57 dB (A) re 20 µPa.

Appliance width 90 cm
Air extraction:
450 / 650 m³/h.
57 / 65 dB (A) re 1 pW.
43 / 51 dB (A) re 20 µPa.
Air recirculation:
340 / 430 m³/h.
66 / 71 dB (A) re 1 pW.
52 / 57 dB (A) re 20 µPa.

Appliance width 120 cm
Air extraction:
520 / 740 m³/h.
58 / 66 dB (A) re 1 pW.
44 / 52 dB (A) re 20 µPa.
Air recirculation:
400 / 470 m³/h.
71 / 74 dB (A) re 1 pW.
57 / 60 dB (A) re 20 µPa.

Output ventilation appliances motorless.
See table page 246/247.

Features
3 electronically controlled output levels.
Intensive mode.
Interval ventilation.
Run-on function.
Grease filter saturation indicator.
Cartridge-type filter, dishwasher-safe.
Dimmable halogen Soft-Light 3 x 20/3 x 20/3 x 20 W.

Planning notes
For calculating the exhaust air line go to Rodun online at www.gaggenau.com.
For maximum duct lengths use Gaggenau flat rectangular ducts AD 8... or Naber-System Compair flow. Other flat ducts are not permitted!
When installing a ventilation hood with air extraction mode and a chimney-vented fireplace, the hood's power supply line needs a suitable safety switch.
A large drop in output and significantly increased noise can be expected in the air recirculation mode in the case of ventilation hoods with a very high air output.
Vario cooktops with intensive production of vapours like VR/VP/VF should be placed in the middle beneath the cooker hood (in this case air recirculation is not recommended).
Clearance above gas appliances min. 65 cm (more than total load gas 12 kW min. 70 cm).
Clearance above electric appliances min. 60 cm.
Side outlet possible no lower than 56 cm from the bottom edge of the hood (pipe middle).
Fit the socket concealed behind ventilation duct.
Weight 29 – 33 kg.
Recommendation for stainless steel parts to match hood that have to be welded and polished: brushed grain 280.
Surfaces: Stainless steel 1.4016, ground and brushed IIIC.
Recommendation for aluminium parts to match hood: RAL 9006 white-aluminium or request a paint sample.
The dimensions of the air ducts refer to a distance of 1.60 m from the floor to the bottom edge of the hood.
Convert for other installation heights: Worktop height + minimum clearance + hood with duct.

Installation accessories for the air recirculation ducts you will find at the pages 236–239.

Connection
Total connected load 220/220/280 W.
Connecting cable 1.5 m with plug.
Plug pair for connecting cable for motorless hood included with the remote fan unit AR.

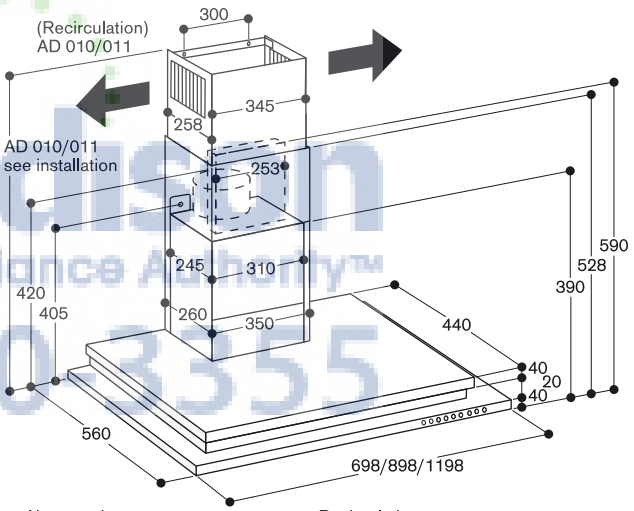

Air extraction:
AD 010/011 012 = 650-1,040mm
AD 010/011 022 = 1,040-1,430mm

Recirculation:
AD 010/011 112 = 760-1,040mm
AD 010/011 122 = 1,040-1,430mm

One-piece special duct in conjunction with ceiling collar on request

Madison Your Appliance Authority™ 800-570-3355

AW 210 170
Stainless steel
Width 70 cm, depth 48 cm
Air extraction/recirculation

AW 210 190
Stainless steel
Width 90 cm, depth 48 cm
Air extraction/recirculation

AW 211 190
Aluminium-lacquered
Width 90 cm, depth 48 cm
Air extraction/recirculation

Necessary installation accessories

AD 010 012
Exhaust air duct stainless steel, for ceiling heights 2.25 m - 2.64 m

AD 010 022
Exhaust air duct stainless steel, for ceiling heights 2.64 m - 3.02 m

AD 011 012
Exhaust air duct aluminium-lacquered, for ceiling heights 2.25 m - 2.64 m

AD 011 022
Exhaust air duct aluminium-lacquered, for ceiling heights 2.64 m - 3.02 m

Air recirculation duct for ceiling heigths including air flow in the duct (order activated charcoal filter separately)

AD 010 112
Recirculating air duct stainless steel for ceiling heights 2.36 m - 2.64 m

AD 010 122
Recirculating air duct stainless steel for ceiling heights 2.64 m - 3.02 m

AD 011 112
Recirculating air duct aluminium-lacquered for ceiling heights 2.36 m - 2.64 m

AD 011 122
Recirculating air duct aluminium-lacquered for ceiling heights 2.64 m - 3.02 m

AD 010 392
Ceiling collar for air ducts
Stainless steel

AD 011 392
Ceiling collar for air ducts
Aluminium-lacquered

Special accessories

KF 001 010
Activated charcoal filter

Side duct, special ducts
made to measure. For production reasons, aluminium-lacquered ducts have a longer delivery time.
Please enquire about price.

Installation accessories for the air recirculation ducts you will find at the pages 236–239.

Wall-mounted hood
AW 210/AW 211

- Classic Gaggenau design, with reduced depth of 48 cm
- Air extraction or recirculation system
- Especially quiet with high performance

Output
Performance and noise level, output level 3/Intensive:
Air output according to DIN EN 61591.
Sound power level according to EN 60704-3.
Sound pressure level according to EN 60704-2-13.

Appliance width 70 cm

Air extraction:
450 / 650 m³/h.
57 / 65 dB (A) re 1 pW.
43 / 51 dB (A) re 20 µPa.
Air recirculation:
340 / 430 m³/h.
66 / 71 dB (A) re 1 pW.
52 / 57 dB (A) re 20 µPa.

Appliance width 90 cm

Air extraction:
450 / 650 m³/h.
57 / 65 dB (A) re 1 pW.
43 / 51 dB (A) re 20 µPa.
Air recirculation:
340 / 430 m³/h.
66 / 71 dB (A) re 1 pW.
52 / 57 dB (A) re 20 µPa.

Features
3 electronically controlled output levels.
Intensive mode.
Interval ventilation.
Run-on function.
Grease filter saturation indicator.
Cartridge-type filter, dishwasher-safe.
Dimmable halogen Soft-Light
3 x 20/3 x 20/3 x 20 W.

Planning notes
For calculating the exhaust air line go to Rodun online at www.gaggenau.com.
For maximum duct lengths use Gaggenau flat rectangular ducts AD 8... or Naber-System Compair flow. Other flat ducts are not permitted!
When installing a ventilation hood with air extraction mode and a chimney-vented fireplace, the hood's power supply line needs a suitable safety switch.
Vario cooktops with intensive production of vapours like VR/VP/VF should be placed in the middle beneath the cooker hood (in this case air recirculation is not recommended).
Clearance above gas appliances min. 65 cm (more than total load gas 12 kW min. 70 cm).
Clearance above electric appliances min. 60 cm.
Side outlet possible no lower than 56 cm from the bottom edge of the hood (pipe middle).
Fit the socket concealed behind ventilation duct.
Weight 23 – 28 kg.
Recommendation for stainless steel parts to match hood that have to be welded and polished: brushed grain 280.
Surfaces: Stainless steel 1.4016, ground and brushed IIIC.
Recommendation for aluminium parts to match hood: RAL 9006 white-aluminium or request a paint sample.

The dimensions of the air ducts refer to a distance of 1.60 m from the floor to the bottom edge of the hood.
Convert for other installation heights: Worktop height + minimum clearance + hood with duct.

Connection
Total connected load 220 W.
Connecting cable 1.5 m with plug.

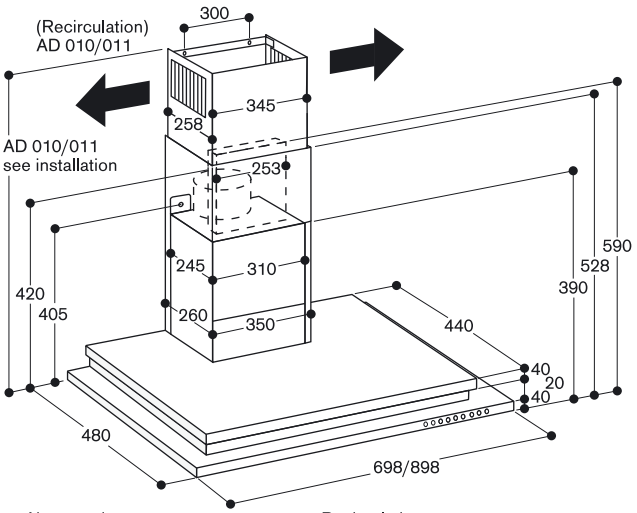

Air extraction:
AD 010/011 012 = 650-1,040mm
AD 010/011 022 = 1,040-1,430mm

Recirculation:
AD 010/011 112 = 760-1,040mm
AD 010/011 122 = 1,040-1,430mm

One-piece special duct in conjunction with ceiling collar on request

AJMadison
Your Appliance Authority™
800-570-3355

AH 900 161
Stainless steel front panel
Width 60 cm
Air extraction/recirculation

AH 900 171
Stainless steel front panel
Width 70 cm
Air extraction/recirculation

AH 900 191
Stainless steel front panel
Width 90 cm
Air extraction/recirculation

Installation accessories

LL 010 000
Air baffle
Fitted on upper cabinet above blow-out opening, recirculating air. This accessory prevents soiling of the ceiling. For AH 900/250, AF 280.

Special accessories

FF 900 056
Metal grease filter for retrofitting AH 900 161/171

FF 900 091
Metal grease filter for retrofitting AH 900 191

KF 900 055
Activated charcoal air filter for retrofitting AH 900 161/171

KF 900 090
Activated charcoal air filter for retrofitting AH 900 191

Installation accessories for the air recirculation ducts you will find at the pages 236–239.

Flat kitchen hood
AH 900

- From the inventor of flat kitchen hoods
- Especially quiet
- Easy filter change
- Air extraction or recirculation system

Output

Performance and noise level, output level 3/Intensive:
Air output according to DIN EN 61591.
Sound power level according to EN 60704-3.
Sound pressure level according to EN 60704-2-13.

Appliance width 60 cm

Air extraction:
440 / 600 m³/h.
54 / 61 dB (A) re 1 pW.
40 / 47 dB (A) re 20 µPa.
Air recirculation:
280 / 370 m³/h.
64 / 70 dB (A) re 1 pW.
50 / 56 dB (A) re 20 µPa.

Appliance width 70 cm

Air extraction:
440 / 600 m³/h.
54 / 61 dB (A) re 1 pW.
40 / 47 dB (A) re 20 µPa.
Air recirculation:
280 / 370 m³/h.
64 / 70 dB (A) re 1 pW.
50 / 56 dB (A) re 20 µPa.

Appliance width 90 cm

Air extraction:
440 / 600 m³/h.
54 / 62 dB (A) re 1 pW.
40 / 47 dB (A) re 20 µPa.
Air recirculation:
280 / 370 m³/h.
64 / 71 dB (A) re 1 pW.
50 / 57 dB (A) re 20 µPa.

Features

Controls at front.
3 electronically controlled output levels.
Intensive mode.
Interval ventilation.
Run-on function.
Grease filter saturation indicator.
Cartridge-type filter, dishwasher-safe.
Compact fluorescent lamp
1 x 36/1 x 36/2 x 24 W.
Light can be switched on separately.
Extendable steam screen 175 mm.
DN 150 exhaust air pipe.

Planning notes

For calculating the exhaust air line go to Rodun online at www.gaggenau.com.
For maximum duct lengths use Gaggenau flat rectangular ducts AD 8... or Naber-System Compair flow. Other flat ducts are not permitted!
When installing a ventilation hood with air extraction mode and a chimney-vented fireplace, the hood's power supply line needs a suitable safety switch.
Vario cooktops with intensive production of vapours like VR/VP/VF should be placed in the middle beneath the cooker hood (in this case air recirculation is not recommended).

Clearance above gas appliances min. 60 cm (more than total load gas 12 kW min. 70 cm).
Clearance above electric appliances min. 47 cm.
To be installed in an upper cabinet without base.
70 cm hood can be installed in 60 cm upper cabinet.
To change the filter, the door of the cabinet must be opened completely.

Connection

Total connected load 230/230/240 W.
Connecting cable 1.5 m with plug.

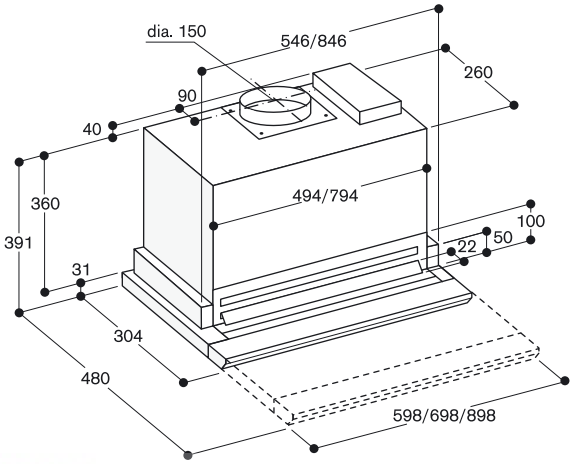

Madison
Your Appliance Authority™
800-570-3355

AH 250 161
Aluminium front panel
Width 60 cm
Air extraction/recirculation

Installation accessories

LL 010 000
Air baffle
Fitted on upper cabinet above blow-out opening, recirculating air. This accessory prevents soiling of the ceiling. For AH 900/250, AF 280.

Special accessories

FF 250 055
Metal grease filter for retrofitting AH 250 161

GL 250 062
White handle strip

KF 250 055
Activated charcoal air filter for retrofitting AH 250 161

Installation accessories for the air recirculation ducts you will find at the pages 236–239.

Flat kitchen hood
AH 250

- An early Gaggenau invention
- Easy filter change
- With additional rack
- Air extraction or recirculation system

Output

Performance and noise level, output level 3/Intensive:
Air output according to DIN EN 61591.
Sound power level according to EN 60704-3.
Sound pressure level according to EN 60704-2-13.

Air extraction:
360 / 500 m³/h.
61 / 70 dB (A) re 1 pW.
47 / 55 dB (A) re 20 µPa.
Air recirculation:
210 / 300 m³/h.
64 / 74 dB (A) re 1 pW.
49 / 59 dB (A) re 20 µPa.

Features

Controls on the right side of the steam screen.
3 electronically controlled output levels.
Intensive mode.
10 minutes run-on mode.
Run-on function.
Grease filter saturation indicator.
Metal grease filter.
Compact fluorescent lamp 1 x 36 W.
Light can be switched on separately.
Extendable steam screen 175 mm.
Fan and light are switched on by pulling out the steam screen.
DN 100 or DN 125 exhaust air pipe connection.

Planning notes

For calculating the exhaust air line go to Rodun online at www.gaggenau.com.
For maximum duct lengths use Gaggenau flat rectangular ducts AD 8... or Naber-System Compair flow. Other flat ducts are not permitted!
When installing a ventilation hood with air extraction mode and a chimney-vented fireplace, the hood's power supply line needs a suitable safety switch.
Vario cooktops with intensive production of vapours like VR/VP/VF should be placed in the middle beneath the cooker hood (in this case air recirculation is not recommended).
Clearance above gas appliances min. 60 cm (more than total load gas 12 kW min. 70 cm).
Clearance above electric appliances min. 47 cm.
To be installed in an upper cabinet or ventilation hood cabinet with spice rack.
Minimum cabinet depth 285 mm (cabinet dimensions).
Front panel can be replaced by furniture trim.
Operator control on the right side of the steam screen.

Connection

Total connected load 280 W.
Connecting cable 1.5 m with plug.

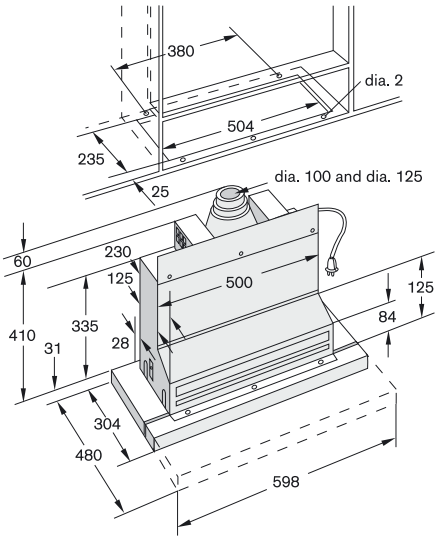

AJMadison
Your Appliance Authority™
800-570-3355

AF 280 160
Aluminium front panel
Width 60 cm
Air extraction/recirculation

AF 280 170
Aluminium front panel
Width 70 cm
Air extraction/recirculation

AF 280 190
Aluminium front panel
Width 90 cm
Air extraction/recirculation

Installation accessories

LL 010 000
Air baffle
Fitted on upper cabinet above blow-out opening, recirculating air. This accessory prevents soiling of the ceiling. For AH 900/250, AF 280.

Special accessories

KF 280 001
Starter set for conversion to recirculation
Includes activated charcoal filter, pipe segment, recirculating air grille and installation material.

KF 280 002
Activated charcoal air filter for retrofitting, matching all hood widths

Installation accessories for the air recirculation ducts you will find at the pages 236–239.

Flat kitchen hood
AF 280

- Invisibly integrated in an individual furniture front
- Air extraction or recirculation system
- Controls can be individually placed
- Dimmable Soft-Light

Output
Performance and noise level, output level 3/Intensive:
Air output according to DIN EN 61591.
Sound power level according to EN 60704-3.
Sound pressure level according to EN 60704-2-13.

Appliance width 60/70/90 cm
Air extraction:
450 / 700 m³/h.
59 / 62 dB (A) re 1 pW.
47 / 50 dB (A) re 20 µPa.
Air recirculation:
330 / 430 m³/h.
64 / 69 dB (A) re 1 pW.
52 / 57 dB (A) re 20 µPa.

Features
Controls on the right or left side or at top of the steam screen.
3 electronically controlled output levels.
Intensive mode.
Interval ventilation.
Run-on function.
Grease filter saturation indicator.
2 cartridge-type grease filters.
Dimmable halogen Soft-Light 2 x 20 W.
Light can be switched on separately.
Extendable steam screen 155 mm with filter.
DN 125 or DN 150 exhaust air pipe connection.

Planning notes
For calculating the exhaust air line go to Rodun online at www.gaggenau.com.
Vario cooktops with intensive production of vapours like VR/VP/VF should be placed in the middle beneath the cooker hood (in this case air recirculation is not recommended).
Clearance above gas appliances min. 65 cm (more than total load gas 12 kW min. 70 cm).
Clearance above electric appliances min. 43 cm.
To be installed in an upper cabinet without base, but with spice rack.
Minimum cabinet depth 293 mm (cabinet dimensions).
Front panel can be replaced by furniture trim.
Installation in a 60 cm wide upper cabinet is possible.
Upper cabinets of AH 240/250 can be used further by unlatching the cabinet base and modifying the spice rack (front panel height AF 280: 40 mm).
When installing a ventilation hood with air extraction mode and a chimney-vented fireplace, the hood's power supply line needs a suitable safety switch.

Connection
Total connected load 240/240/260 W.
Connecting cable 1.3 m with plug.

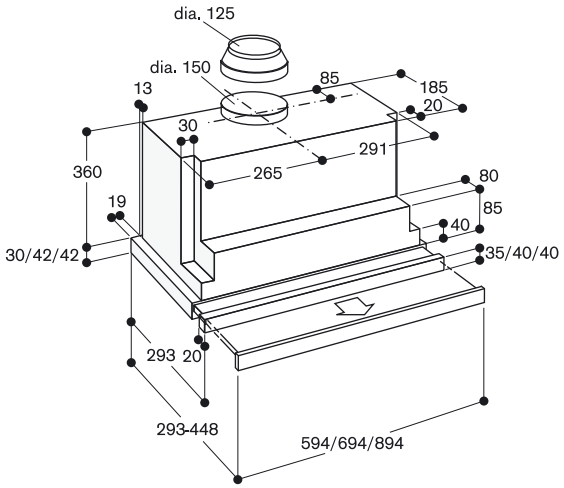

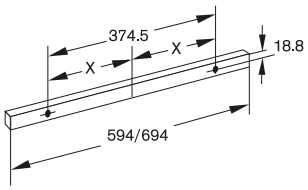

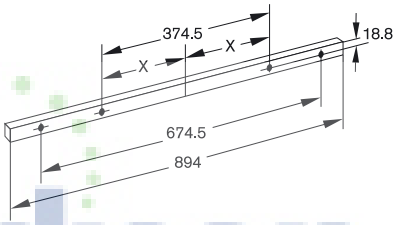

AjMadison
Your Appliance Authority™
800-570-3355

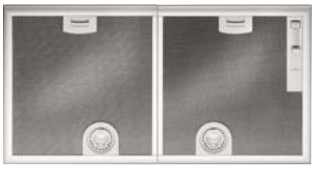

AH 273 150
Stainless steel filter
Width 50 cm
Air extraction/recirculation

AH 273 170
Stainless steel filter
Width 70 cm
Air extraction/recirculation

Special accessories

KF 273 198
Activated charcoal air filter

Installation accessories for the air recirculation ducts you will find at the pages 236–239.

Canopy extractor
AH 273

- Installation in hoods with particularly low crown height
- Air extraction or recirculation system

Output
Performance and noise level, output level 3/Intensive:
Air output according to DIN EN 61591.
Sound power level according to EN 60704-3.
Sound pressure level according to EN 60704-2-13.

Appliance width 50/70 cm
Air extraction:
400 / 600 m³/h.
58 / 67 dB (A) re 1 pW.
46 / 55 dB (A) re 20 µPa.
Air recirculation:
320 / 420 m³/h.
61 / 69 dB (A) re 1 pW.
49 / 57 dB (A) re 20 µPa.

Features
3 electro-mecanically controlled output levels.
Intensive mode.
Cartridge-type filter, dishwasher-safe.
Halogen light 2 x 20 W.
Light can be switched on separately.
DN 125 or DN 150 exhaust air pipe.

Planning notes
For calculating the exhaust air line go to Rodun online at www.gaggenau.com.
For maximum duct lengths use Gaggenau flat rectangular ducts AD 8... or Naber-System Compair flow. Other flat ducts are not permitted!
When installing a ventilation hood with air extraction mode and a chimney-vented fireplace, the hood's power supply line needs a suitable safety switch.
Vario cooktops with intensive production of vapours like VR/VP/VF should be placed in the middle beneath the cooker hood (in this case air recirculation is not recommended).
Clearance above gas appliances min. 65 cm (more than total load gas 12 kW min. 70 cm).
Clearance above electric appliances min. 65 cm.

Connection
Total connected load 240 W.
Connecting cable 1.3 m with plug.

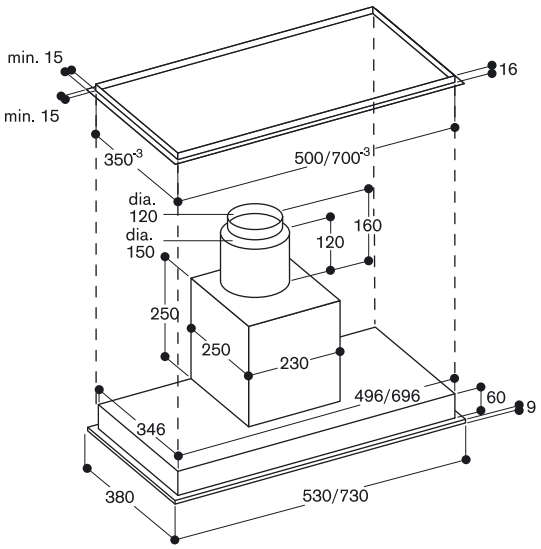

Appliance Authority
Your Appliance Authority™
800-570-3355

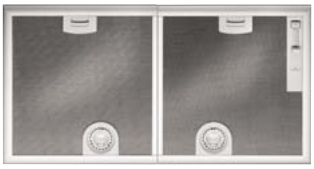

AH 198 150
Stainless steel filter
Width 50 cm
Air extraction/recirculation

AH 198 170
Stainless steel filter
Width 70 cm
Air extraction/recirculation

Special accessories
KF 273 198
Activated charcoal air filter

Installation accessories for the air recirculation ducts you will find at the pages 236–239.

Canopy extractor
AH 198

- Invisibly integrated in an individual furniture front
- Air extraction or recirculation system

Output
Performance and noise level, output level 3/Intensive:
Air output according to DIN EN 61591.
Sound power level according to EN 60704-3.
Sound pressure level according to EN 60704-2-13.

Appliance width 50/70 cm
Air extraction:
400 / 650 m³/h.
59 / 70 dB (A) re 1 pW.
47 / 58 dB (A) re 20 µPa.
Air recirculation:
320 / 430 m³/h.
64 / 72 dB (A) re 1 pW.
52 / 60 dB (A) re 20 µPa.

Features
3 electro-mecanically controlled output levels.
Intensive mode.
Cartridge-type filter, dishwasher-safe.
Halogen light 2 x 20 W.
Light can be switched on separately.
DN 125 or DN 150 exhaust air pipe.

Planning notes
For calculating the exhaust air line go to Rodun online at www.gaggenau.com.
For maximum duct lengths use Gaggenau flat rectangular ducts AD 8... or Naber-System Compair flow. Other flat ducts are not permitted!
When installing a ventilation hood with air extraction mode and a chimney-vented fireplace, the hood's power supply line needs a suitable safety switch.
Vario cooktops with intensive production of vapours like VR/VP/VF should be placed in the middle beneath the cooker hood (in this case air recirculation is not recommended).
Clearance above gas appliances min. 65 cm (more than total load gas 12 kW min. 70 cm).
Clearance above electric appliances min. 65 cm.

Connection
Total connected load 240 W.
Connecting cable 1.3 m with plug.

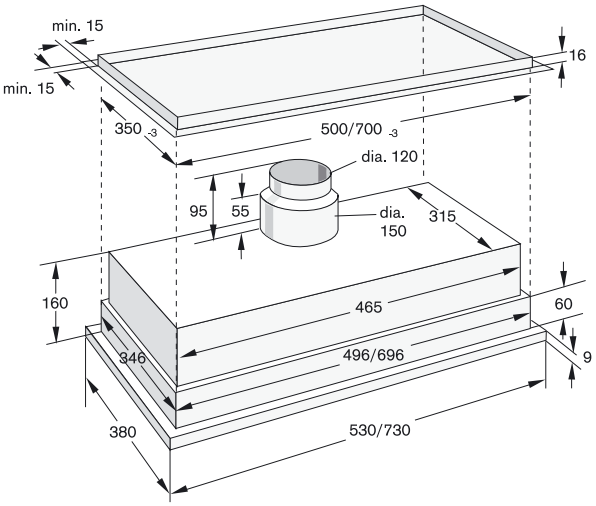

Madison
Your Appliance Authority™
800-570-3355

AR 400 131
Metal housing
Max. air output 950 m³/h
Inside installation
Air extraction

AR 400 140
Metal housing
Max. air output 1,210 m³/h
Inside installation
Air extraction

Installation accessories

AA 009 910
Ceiling installation set

AD 702 042
Pipe adapter from DN 200 circular to DN 150/125 circular
Fitting to DN 150 or 125 by cutting off the diameters not needed.

Special accessories

AA 009 910
Ceiling installation set

Installation accessories for the air recirculation ducts you will find at the pages 236–239.

Remote fan unit
AR 400

- AR 400 140 for maximum output for downdraft ventilation and motorless hoods
- Installation in a separate room allows lower noise level in the kitchen
- To be combined with motorless hoods, downdrafts or ceiling ventilation

Output
Performance output level 3/4:
Air output according to DIN EN 61591.
Sound power and sound pressure depending on built-in situation.

AR 400 131, NW 150
700 / 950 m³/h.

AR 400 140, NW 200
930 / 1,210 m³/h.

For the characteristics of each output level with/without intensive mode please refer to the table with the respective motorless ventilation products.

Features
Metal housing, zinc-plated.
Pipe connections air intake: 1 x DN 200 cylindrical, 4 x DN 150 cylindrical.
Pipe connection pressure side:
AR 400 131: DN 200 and 150
AR 400 140: DN 200
Spare cover for closing air intake.

Planning notes
When installing a ventilation hood with air extraction mode and a chimney-vented fireplace, the hood's power supply line needs a suitable safety switch.
Installation in the drawer area with double height or on the floor with cut-out in the furniture base. Air intake with flat duct max. 2x DN 150 behind the drawers requires worktop depth of min. 700 mm. Cabinets without plinth possible.
Please refer to page 230–233 for recommended configurations of downdraft ventilations and remote fan units and the needed ducting elements.
For maximum duct lengths use Gaggenau flat rectangular ducts AD 8... or Naber-System Compair flow. Other flat ducts are not permitted!
For noise optimisation, use the silencer SD 011 050.
For details of the remote fan unit's effective air output in combination with a hood or downdraft, refer to the table section.

Connection
Fan output 355/520 W.
Connecting cable 1.05 m.
Extension cable 5 m.

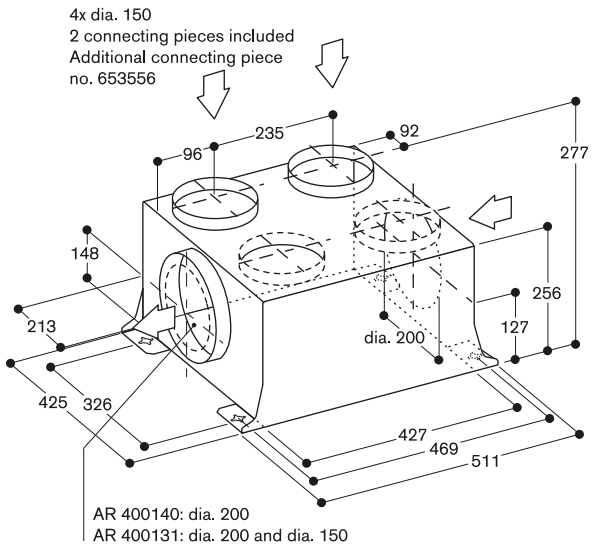

AA 009 910

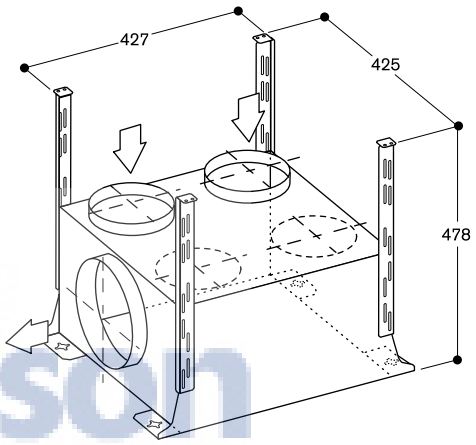

AirMadison
Your Appliance Authority™
800-570-3355

AR 401 131
Stainless steel
Max. air output 850 m³/h
Outside wall mounting
Air extraction

AR 401 140
Stainless steel
Max. air output 1,100 m³/h
Outside wall mounting
Air extraction

Necessary installation accessories

AD 702 052
Telescopic wall-duct
DN 200 cylindrical

Installation accessories

AA 401 910
Roof installation set for remote fan unit AR 401 for slanted roof from 10 °

AD 702 042
Pipe adapter from DN 200 circular to DN 150/125 circular
Fitting to DN 150 or 125 by cutting off the diameters not needed.

Special accessories

AA 401 400
Air outlet cover stainless steel
For AR 401 130/140

AA 401 610
Silencer for air outlet of AR 401
Stainless steel
Not to be combined with air outlet cover AA 401 400

AA 401 910
Roof installation set for remote fan unit AR 401 for slanted roof from 10 °

Installation accessories for the air recirculation ducts you will find at the pages 236–239.

Remote fan unit
AR 401

- AR 401 140 for maximum output for downdraft ventilation and motorless hoods
- Outside installation allows lower noise level in the kitchen
- To be combined with motorless hoods, downdrafts or ceiling ventilation

Output
Performance output level 3/4:
Air output according to DIN EN 61591.
Sound power and sound pressure depending on built-in situation.

AR 401 131, NW 200
590 / 850 m³/h.

AR 401 140, NW 200
860 / 1,100 m³/h.

For the characteristics of each output level with/without intensive mode please refer to the table with the respective motorless ventilation products.

Features
Complete stainless steel housing.
Pipe connections air intake: 1 x DN 200 cylindrical.

Planning notes
When installing a ventilation hood with air extraction mode and a chimney-vented fireplace, the hood's power supply line needs a suitable safety switch.
Roof installation with roof installation set AD 401 910 and telescopic wall duct AD 702 052 in slanted roofs with angle of minimal 10 °.
For maximum duct lengths use Gaggenau flat rectangular ducts AD 8... or Naber-System Compair flow. Other flat ducts are not permitted!
For noise optimisation, use the silencer SD 011 050.
For details of the remote fan unit's effective air output in combination with a hood or downdraft, refer to the table section.

Connection
Fan output 355/520 W.
Connecting cable 1.05 m.
Extension cable 5 m.

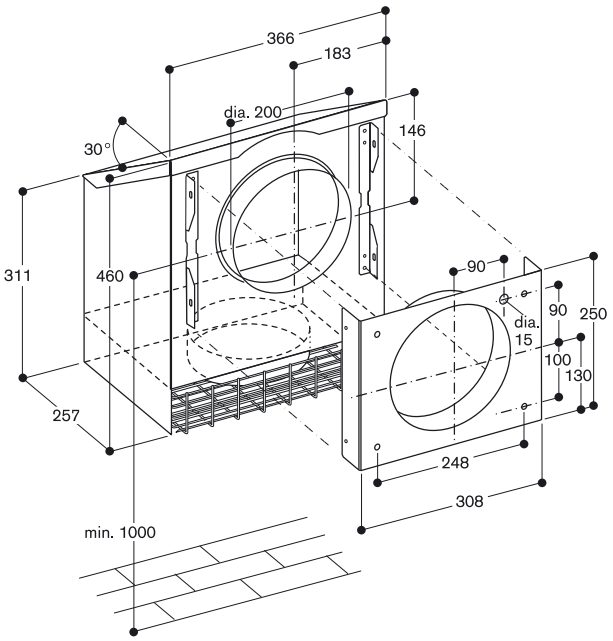

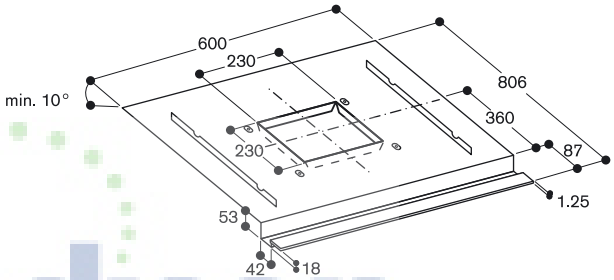

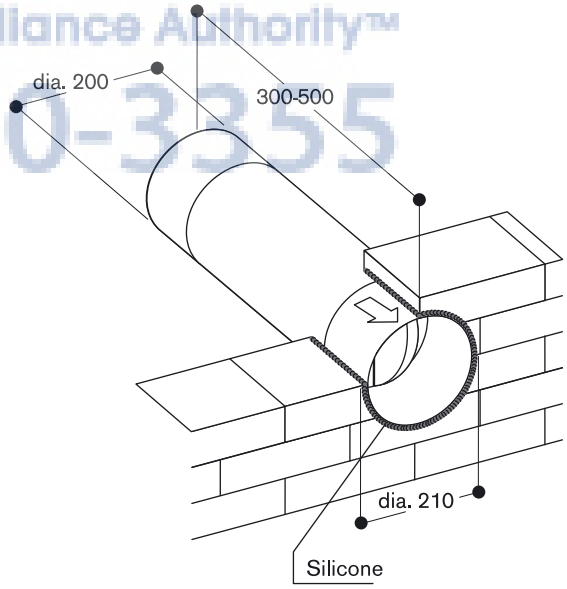

Madison
Your Appliance Authority™
800-570-3355

AR 403 120▼
Metal housing
Max. air output 750 m³/h
Plinth installation
Air extraction

▼ Available 2. quarter 2013

Installation accessories for the air recirculation ducts you will find at the pages 236–239.

Remote fan unit for plinth installation
AR 403

- Compact and space-saving installation in a 10cm high plinth
- To be combined with one VL414 or VL041 downdraft ventilation

Output
Performance output level 3/Intensive:
Air output according to DIN EN 61591.
Sound power and sound pressure depending on built-in situation.

Air extraction:
480 / 750 m³/h.

For the characteristics of each output level with/without intensive mode please refer to the table with the respective motorless ventilation products.

Features
Metal housing, zinc-plated.
Pipe connections air intake: 1 x DN 150 cylindrical.

Planning notes
When installing a ventilation hood with air extraction mode and a chimney-vented fireplace, the hood's power supply line needs a suitable safety switch.
Installation in the plinth with cut-out for the air ducting in the furniture base.
For maximum duct lengths use Gaggenau flat rectangular ducts AD 8... or Naber-System Compair flow. Other flat ducts are not permitted!
For details of the remote fan unit's effective air output in combination with a hood or downdraft, refer to the table section.

Connection
Fan output 150 W.
Connecting cable 1.05 m.

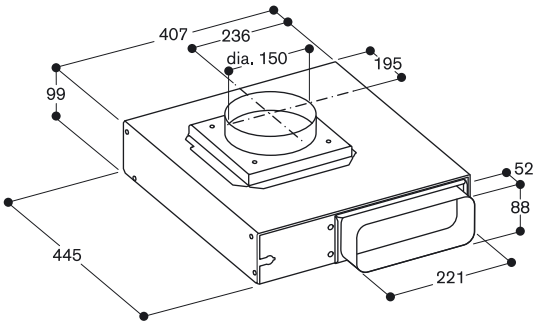

AJMadison
Your Appliance Authority™
800-570-3355

AR 413 120
Metal housing
Max. air output 700 m³/h
Plinth installation
Air recirculation

Installation accessories
AA 010 410
Air exhaust grille recirculation mode
Stainless steel coloured, 90 cm,
including installation fittings, height
adjustable.

Special accessories
AA 413 160
Activated charcoal filter for AR 413

Installation accessories for the air recirculation ducts you will find at the pages 236–239.

Remote fan unit
AR 413

- Easy and compact installation of downdrafts without exhaust ducts. Perfect for cooking islands.
- To be combined with 1-2 downdrafts and the table ventilation AL400

Output
Performance output level 3/4:
Air output according to DIN EN 61591.
Sound power and sound pressure depending on built-in situation.

Air recirculation:
480 / 700 m³/h.

For the characteristics of each output level with/without intensive mode please refer to the table with the respective motorless ventilation products.

Features
Metal housing, zinc-plated.
Pipe connections air intake: 2 x DN 150 cylindrical.
Spare cover for closing air intake.

Planning notes
Installation in the drawer area with double height or on the floor with cut-out in the furniture base. Air intake with flat duct max. 2x DN 150 behind the drawers requires worktop depth of min. 700 mm. Cabinets without plinth possible.
Positioning of installation only with air intakes on upper side.
Please refer to page 226–231 for recommended configurations of downdraft ventilations and remote fan units and the needed ducting elements.
Max. duct lenght: 2 ducts of DN 150, each 1 m and 2 bends of 90°.
For details of the remote fan unit's effective air output in combination with downdraft, refer to the table section.

Connection
Fan output 150 W.
Connecting cable 1.05 m.

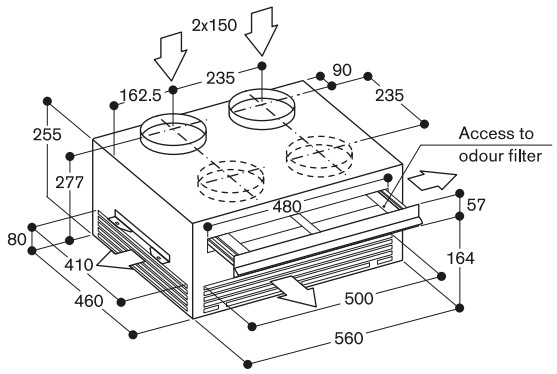

Connect max. 2xVL or 1xAL 400

Madison
Appliance Authority™
800-570-3355

Please respect depth of cabinet body and protruding of the worktop for the required depth of the worktop.
The required ducting elements can be found in the table on the next two double pages.
Flat ducts are not permitted in combination with gas appliances.

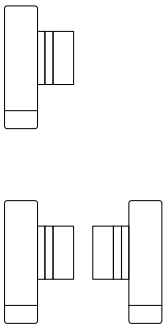

Connection of flat ducting beneath cooktops (VI, VE, CI, CE) downwards. Not possible beneath VP.
Single VL or symmetric configuration of ducting underneath one VI 414/424.
For maximum airflow or duct lengths use flat ducting DN 150.
Minimal worktop depth of 600 mm possible with VL 414 depending on structure of undercounter.

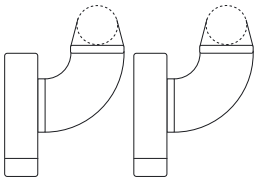

Connection of flat ducting beneath cooktops (VI, VE, CI, CE) directly to the backside. Not possible beneath VP.
Single VL or symmetric configuration of ducting.
For maximum airflow or duct lengths use flat ducting DN 150.
Minimal worktop depth of 600 mm possible with VL 414 depending on interior of undercounter .

Connecting VL to AR 400 using flat duct NW 150 for maximum power

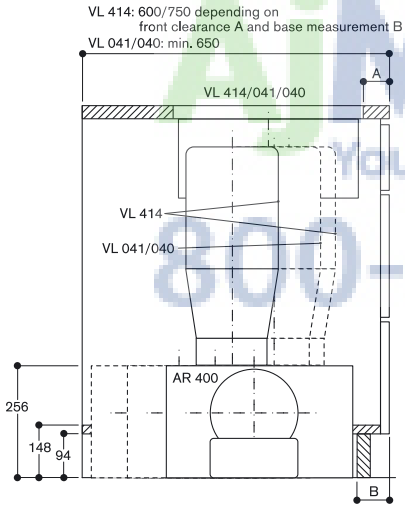

Connecting VL to AR 400 using NW 150 flat duct + flexible aluminium

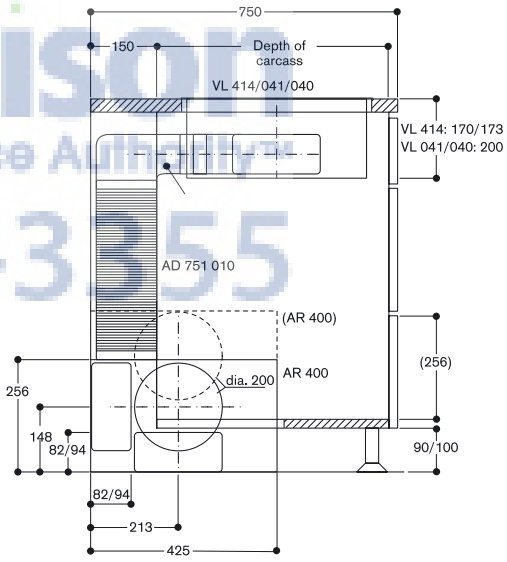

Connecting VL to AR 413 using flat duct NW 150 for maximum power

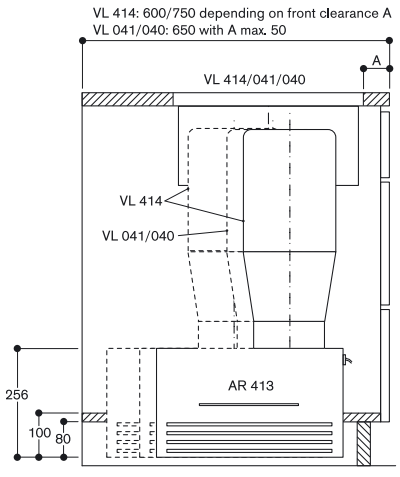

Connecting VL to AR 413 using NW 150 flat duct + flexible aluminium tube

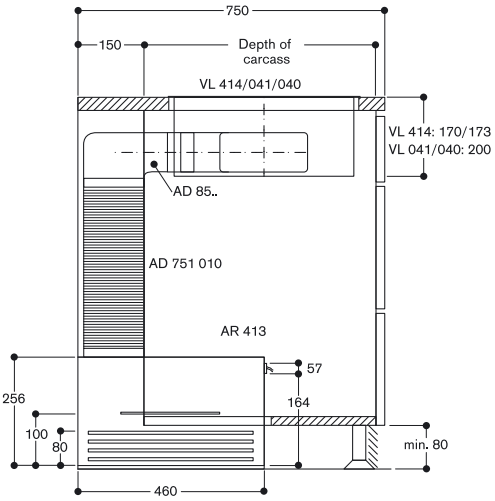

AJMadison
Your Appliance Authority
800-570-3355

AR 400/413 in undercounter situations.

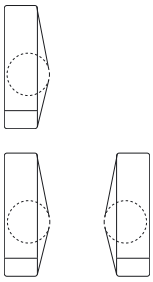

Connection of round ducting to the bottom side with flexible duct DN 125.
To be used for VL beside Vario cooktops with deep housings (VR, VG, VP, VK, VF).

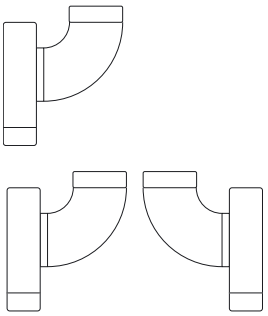

Connection of flat ducting beneath cooktops (VI, VE) directly to the back-side with distance between ducts runs larger than between air intakes of AR.
Not possible beneath VP.
Asymmetric duct run.
Use flexible ducting NW 150 to compensate this difference.
Minimal worktop depth of 600 mm possible with VL 414 depending on interior of undercounter .

Connecting VL to AR 403 using NW 150 flat duct

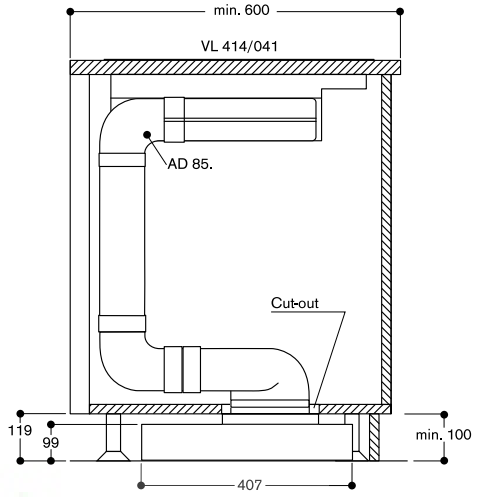

*Note regarding cut-out:
Base height >120 mm: Cut-out 200 x 200 mm

Connecting VL to AR 400 using NW 125 flexible aluminium tube

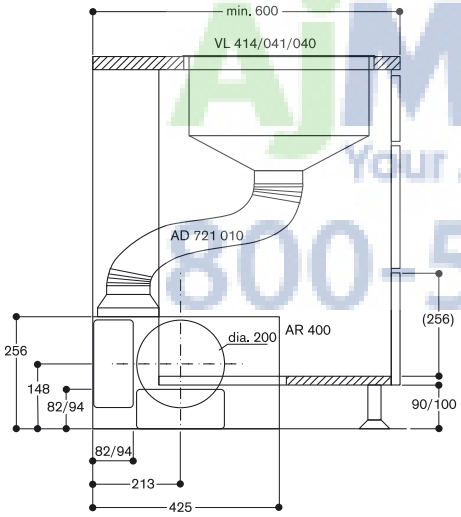

Connecting VL to AR 400 using NW 125/150 flat duct

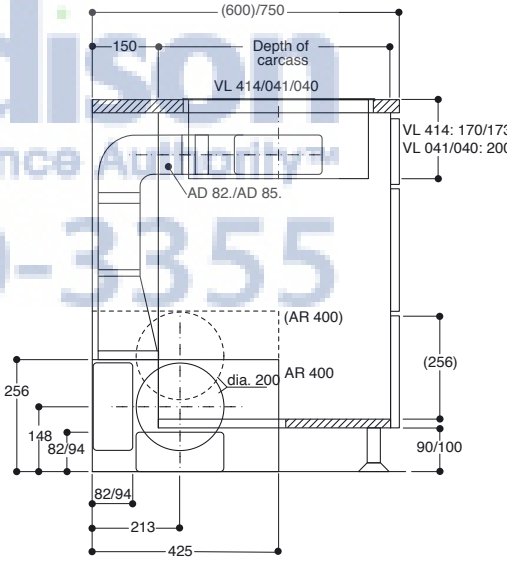

Connecting VL to AR 413 using NW 125 flexible aluminium tube

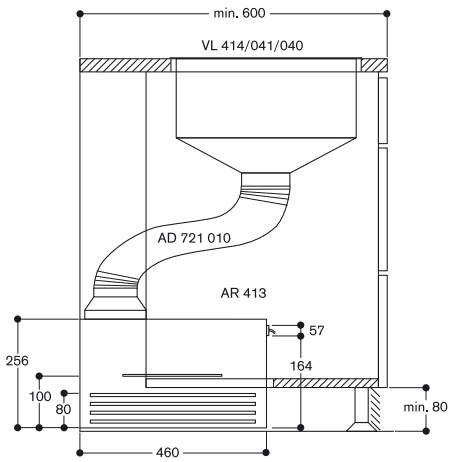

Connecting VL to AR 413 using NW 125/150 flat duct

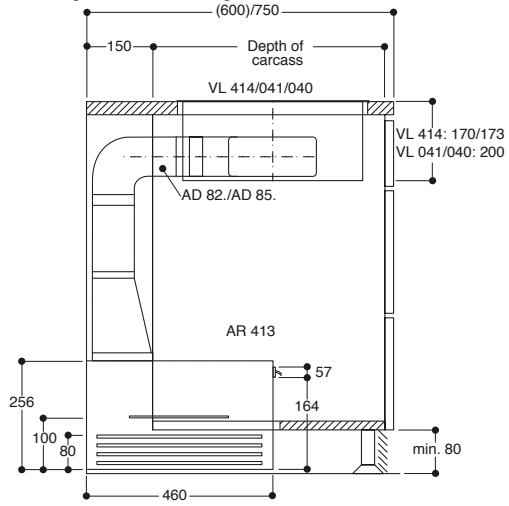

AjMadison
Your Appliance Authority
800-570-3355

Recommended configurations of downdraft ventilations and remote fan units.

Please refer to the cross section plans of cabinets on the previous pages for depth gauges and placement of the remote fan unit.

Please refer to the following pages for an overview and details of duct elements.

Adhesive tape is needed for all connections of plastic ducting.
Flat ducts are not permitted in combination with gas appliances.

Configurations of 3 or 4 VL 414 to be put together accordingly.

Configuration of downdraft ventilations between cooktops		VL 414/041 with flat duct	VL 414/041 with flexible duct	2x VL 414 or VL 041 + VL 040 with flat duct	
Connection of duct elements to the downdraft ventilation		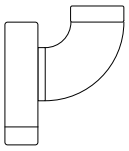		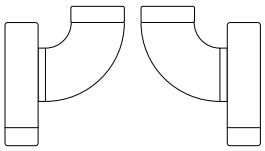	
	DN of duct	1x 150	1x 125	2x 150	2x 125
	Minimal worktop depth depending on protrusion and cabinet depth (mm)	600-700	600	600-700	650-700
	Required connection pieces for VL 414	1x AD 854 046	1x AD 724 040	2x AD 854 046	–
	Required connection pieces for VL 041/040	1x AD 854 042	1x AD 724 040	2x AD 854 042	2x AD 824 042

Recirculation mode: Required duct elements for direct connection of downdraft VL and remote fan unit AR 413 within the cabinet

AR 413 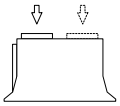	between VL and AR	1x AD 852 031 1x AD 852 030 1x AD 852 041 1x AD 852 010	1x AD 721 010 1x UR 020 151	2x AD 852 031 2x AD 852 030 2x AD 852 041 1x AD 852 010	2x AD 822 031 2x AD 822 030 2x AD 822 041 1x AD 822 010 2x UR 020 151

Recirculation mode: Required duct elements for direct connection of downdraft VL and remote fan unit AR 401 placed at the outside wall

AR 401 with flat duct within plinth area or floor construction 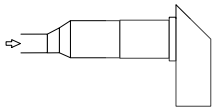	between VL and AR	min. 1x AD 852 031 min. 1x AD 852 030 1x AD 852 010 1x AD 852 041 1x AD 702 042 1x AD 702 052 + straight duct + bends + connection pieces	1x AD 721 010 1x UR 020 151 1x AD 852 042 1x AD 852 041 1x AD 702 042 1x AD 702 052 + straight duct + bends + connection pieces		
AR 401 with flat duct upright behind cabinets 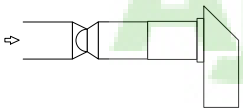	between VL and AR	2x AD 852 031 1x AD 852 030 1x AD 852 010 1x AD 852 041 1x AD 702 042 1x AD 702 052 + straight duct + bends + connection pieces	1x AD 721 010 1x UR 020 151 1x AD 852 042 1x AD 852 041 1x AD 702 042 1x AD 702 052 + straight duct + bends + connection pieces		
AR 401 with flexible duct at the cellar ceiling 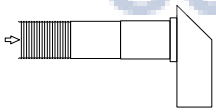	between VL and AR	min.1x AD 852 031 min. 1x AD 852 030 1x AD 852 010 1x AD 852 041 1x AD 702 042 poss. AD 751 010 1x AD 702 042 poss. AR 050 200 1x AD 702 052 + poss. connection pieces	1x AD 721 010 min 1x AD 751 010 1x AD 702 042 evtl. AR 050 200 1x AD 702 052 + poss. connection pieces		

Exhaust mode: Required duct elements for direct connection of downdraft VL and remote fan unit AR 400 within the cabinet

AR 400 with air intake on top 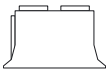	between VL and AR	1x AD 852 031 1x AD 852 030 1x AD 852 041 1x AD 852 010	1x AD 721 010 1x UR 020 151	2x AD 852 031 2x AD 852 030 2x AD 852 041 1x AD 852 010	2x AD 822 031 2x AD 822 030 2x AD 822 041 1x AD 822 010 2x UR 020 151

Exhaust mode: Required duct elements for direct connection of downdraft VL and remote fan unit AR 403 within the cabinet

AR 403 with air intake on top 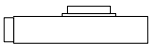	between VL and AR	1x AD 852 031 2x AD 852 030 1x AD 852 010 1x AD 852 042			

For additional configurations see page 232/233.

AjMadison
Your Appliance Authority™
800-570-3055

2x VL 414 with flat duct	2x VL 414 or VL 041 + VL 040 with flat duct	2x VL 414 or VL 041 + VL 040 with flat + flexible duct	VL 041 + VL 040 with flat duct	2x VL 414 or VL 041 + VL 040 with flexible duct
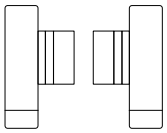	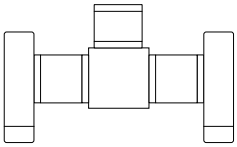	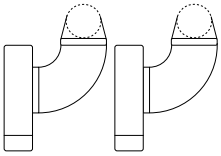	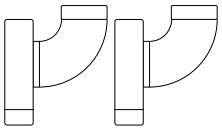	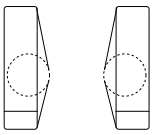
2x 150	2x 150	2x 150	2x 125	2x 125
600-650	700	750	650-700	600
2x AD 854 046	2x AD 854 046	2x AD 854 046	–	2x AD 724 040
2x AD 854 042	2x AD 854 042	2x AD 854 042	2x AD 824 042	2x AD 724 040
2x AD 852 030 2x AD 852 041 1x AD 852 010		2x AD 852 031 2x AD 852 042 1x AD 751 010	2x AD 822 031 2x AD 822 030 2x AD 822 041 8x AD 822 032 1x AD 822 010 2x UR 020 151	1x AD 721 010 2x UR 020 151
	5x AD 852 040 min. 1x AD 852 010 1x AD 854 044 2x AD 852 030 1x AD 852 031 1x AD 702 042 1x AD 702 052 + straight duct + bends + connection pieces			1-2x AD 721 010 1x AD 754 044 1x AD 852 042 1x AD 754 090 1x AD 852 041 1x AD 702 042 1x AD 702 052 + straight duct + bends + connection pieces
	5x AD 852 040 min 1x AD 852 010 1x AD 854 044 1x AD 852 030 1x AD 852 031 1x AD 702 042 1x AD 702 052 + straight duct + bends + connection pieces			1-2x AD 721 010 1x AD 754 044 1x AD 852 042 1x AD 754 090 1x AD 852 041 1x AD 702 042 1x AD 702 052 + straight duct + bends + connection pieces
	5x AD 852 040 min 1x AD 852 010 1x AD 854 044 min. 1x AD 852 030 1x AD 852 041 1x AD 702 042 min. 1x AR 050 200 1x AD 702 052 + poss. connection pieces	2x AD 852 031 2x AD 852 042 2x AD 751 010 1x AD 704 044 min. 1x AR 050 200 1x AD 702 052 + poss. connection pieces		1-2x AD 721 010 1x AD 754 044 min. 1x AD 751 010 1x AD 702 042 extl. AR 050 200 1x AD 702 052 + poss. connection pieces
2x AD 822 030 2x AD 822 041 1x AD 822 010 2x UR 020 151		2x AD 822 031 2x AD 852 042 1x AD 751 010	2x AD 822 031 2x AD 822 030 2x AD 822 041 8x AD 822 032 1x AD 822 010 2x UR 020 151	1x AD 721 010 2x UR 020 151

AjMadison
Your Appliance Authority
800-570-3355

Recommended configurations of downdraft ventilations and remote fan units.

Please refer to the cross section plans of cabinets on the previous pages for depth gauges and placement of the remote fan unit.

Please refer to the following pages for an overview and details of duct elements.

Adhesive tape is needed for all connections of plastic ducting.
Flat ducts are not permitted in combination with gas appliances.

Configurations of 3 or 4 VL 414 to be put together accordingly.

	Configuration of downdraft ventilations between cooktops	VL 414/041 with flat duct	VL 414/041 with flexible duct	2x VL 414 or VL 041 + VL 040 with flat duct	
	Connection of duct elements to the downdraft ventilation	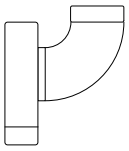		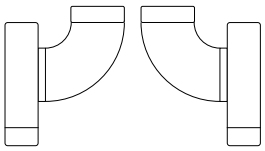	
	DN of duct	1x 150	1x 125	2x 150	2x 125
	Minimal worktop depth depending on protrusion and cabinet depth (mm)	600-700	600	600-700	650-700
	Required connection pieces for VL 414	1x AD 854 046	1x AD 724 040	2x AD 854 046	–
	Required connection pieces for VL 041/040	1x AD 854 042	1x AD 724 040	2x AD 854 042	2x AD 824 042
Exhaust mode: Required duct elements for the connection of remote fan unit with wall outlet, plus further ducts and bends depending on the duct run and length.					
AR 400 outlet with duct 150	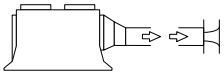	between AR and AD 750 050/051	1x AD 702 042* 2x AD 852 041 + straight duct + bends + connection pieces	1x AD 702 042* 2x AD 852 041 + straight duct + bends + connection pieces	1x AD 702 042* 2x AD 852 041 + straight duct + bends + connection pieces
AR 400 outlet with flat duct 150	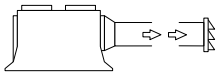	between AR and AD 850 050	1x AD 702 042* 1x AD 852 041 + straight duct + bends + connection pieces	1x AD 702 042* 1x AD 852 041 + straight duct + bends + connection pieces	1x AD 702 042* 1x AD 852 041 + straight duct + bends + connection pieces
AR 400 outlet with flexible duct 150	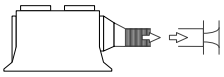	between AR and AD 750 050/051	1x AD 702 042* min. 1x AD 751 010 poss. _ x RV 040 150	1x AD 702 042* min. 1x AD 751 010 poss. _ x RV 040 150	1x AD 702 042* min. 1x AD 751 010 poss. _ x RV 040 150
AR 400 with outlet flexible duct 200	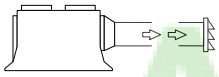	between AR and AD 700 051	min. 1x AR 050 200 poss. _ x RV 040 200 1x AD 702 052	min. 1x AR 050 200 poss. _ x RV 040 200 1x AD 702 052	min. 1x AR 050 200 poss. _ x RV 040 200 1x AD 702 052	min. 1x AR 050 200 poss. _ x RV 040 200 1x AD 702 052

For all configurations of plastic ducts adhesive tape for fixing and sealing the connections is not included.

AjMadison
Your Appliance Authority™
800-570-3355

2x VL 414 with flat duct	2x VL 414 or VL 041 + VL 040 with flat duct	2x VL 414 or VL 041 + VL 040 with flat + flexible duct	VL 041 + VL 040 with flat duct	2x VL 414 or VL 041 + VL 040 with flexible duct
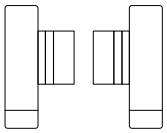	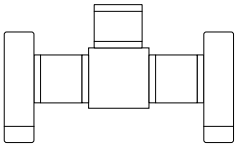	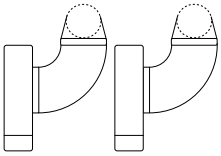	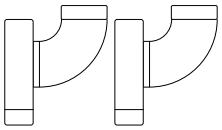	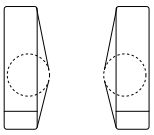
2x 150	2x 150	2x 150	2x 125	2x 125
600-650	700	750	650-700	600
2x AD 854 046	2x AD 854 046	2x AD 854 046	–	2x AD 724 040
2x AD 854 042	2x AD 854 042	2x AD 854 042	2x AD 824 042	2x AD 724 040
(*not necessary with AR 400 131)				
1x AD 702 042* 2x AD 852 041 + straight duct + bends + connection pieces			1x AD 702 042* 2x AD 852 041 + straight duct + bends + connection pieces	1x AD 702 042* 2x AD 852 041 + straight duct + bends + connection pieces
1x AD 702 042* 1x AD 852 041 + straight duct + bends + connection pieces			1x AD 702 042* 1x AD 852 041 + straight duct + bends + connection pieces	1x AD 702 042* 1x AD 852 041 + straight duct + bends + connection pieces
1x AD 702 042* min. 1x AD 751 010 poss. _ x RV 040 150			1x AD 702 042* min. 1x AD 751 010 poss. _ x RV 040 150	1x AD 702 042* min. 1x AD 751 010 poss. _ x RV 040 150
min. 1x AR 050 200 poss. _ x RV 040 200 1x AD 702 052		min. 1x AR 050 200 poss. _ x RV 040 200 1x AD 702 052	min. 1x AR 050 200 evtl. _ x RV 040 200 1x AD 702 052	min. 1x AR 050 200 poss. _ x RV 040 200 1x AD 702 052

AjMadison
Your Appliance Authority™
800-570-3355

The motorless ventilation units have a motor connection cable that is used to connect the external Gaggenau fan. The cable transports the actuation of the four power levels to its six wires.

To connect two fan modules (e.g. to the ceiling ventilation), the control unit is split into two motor connection cables using the switching amplifier. For the required double switching capacity, the switching amplifier has an additional connecting cable with Schuko plug.

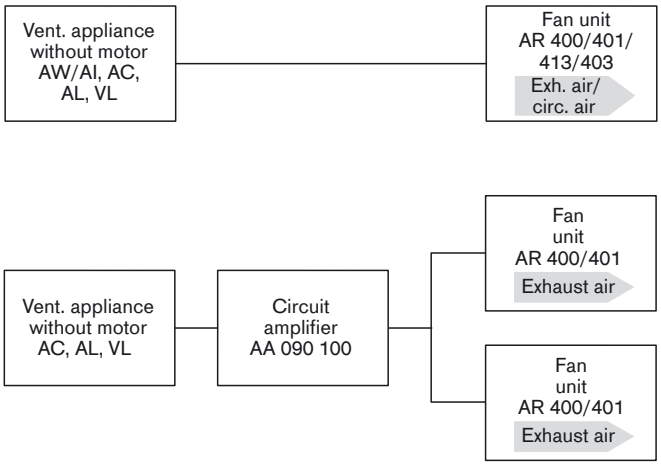

Further control options

On request, there is an option to connect the signal of the motor connection cable to an existing on-site ventilation system so that this can respond accordingly to the activity of the Gaggenau ventilation system.

The relevant ventilation planner is then responsible for the effectiveness of the entire ventilation system.

The warranty for the electrical function remains valid for as long as its specifications are complied with.

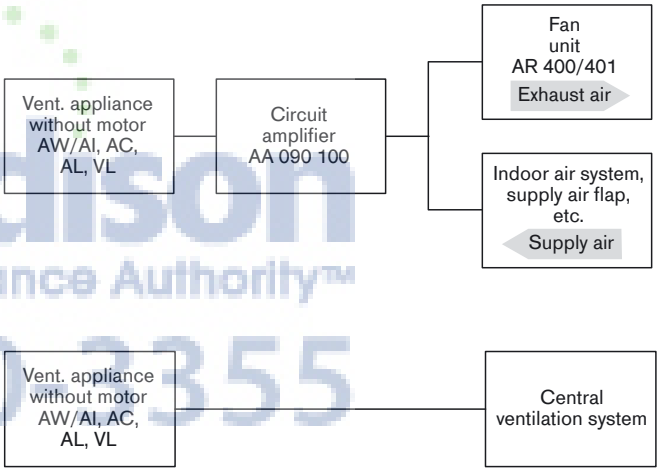

AjMadison
Your Appliance Authority™
800-570-2355

AjMadison
Your Appliance Authority™
800-570-3355

The detailed overview of the ventilation appliances accessories with all planning information you will find in the tables on the next pages.

AA 090 100
Circuit amplifier for connecting two remote fan units

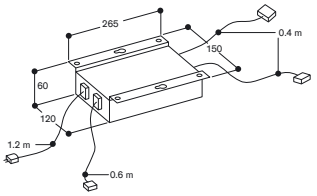

AD 8..
Flat duct system with conducting fins
Plastic
DN 125/150 flat rectangular

Allows for long duct runs with highest efficiency due to soft duct shape and conducting fins within duct bends.
Compact installation height even with DN 150 allows for integration in floor constructions.
Space-saving duct configuration of pairs of downdraft ventilation by use of DN 125.

Features
For further details see table of ventilation accessories.

Planning notes
Respect straight alignment of ducts and exact angles. Use 15° bends for compensation.
Secure and tighten all joints with adhesive tape.
DN 125 only recommended for connecting pairs of downdraft ventilations to the remote fan.

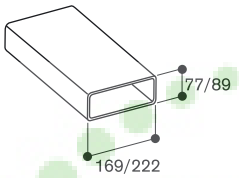

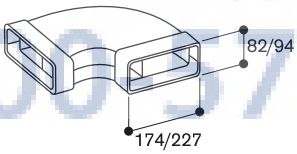

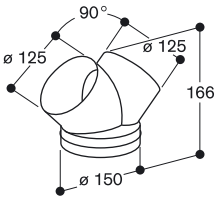

AD 702 042
Pipe adapter from DN 200 circular to DN 150/125 circular
Fitting to DN 150 or 125 by cutting off the diameters not needed

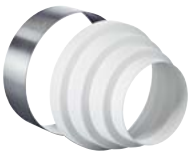

AD 750 050
Comfort wall outlet with telescopic duct
Stainless steel/Plastic
DN 150 cylindric

Very little loss of airflow and very low noise due to integrated conducting element.
Optimal temperature insulation.
Hermetically sealed by spring cap with magnet when ventilation is not active.
Conform to blower-door test.
Planned stainless steel cover with minimal effect to the aesthetics of the house facade, can be laminated.

Features
Nonwearing spring cap with ball-bearings and magnet (no one-way flap required).
Telescopic wall duct 314 - 500 mm for cylindrical duct DN 150.

Planning notes
Conform to blower-door test.
For connection of flat rectangular duct use connection piece AD 852 042.
Wall breakthrough ø 155 mm.

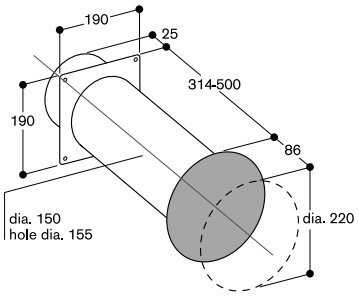

AD 750 051
Wall outlet with telescopic duct
Stainless steel/Plastic
DN 150 cylindric

Little loss of airflow due to large stainless steel outlet louvers.

Features
Weatherproof stainless steel louvers.
Integrated one-way flap.
Telescopic wall duct 275 - 460 mm for cylindrical duct DN 150.

Planning notes
For connection of flat rectangular duct use connection piece AD 852 042.
Wall breakthrough ø 155 mm.

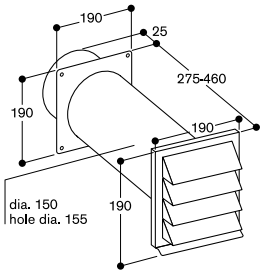

AD 850 050
Wall outlet
Stainless steel
DN 150 flat rectangular

Little loss of airflow due to large stainless steel outlet louvers.
Compact dimensions with flat structure.

Features
Weatherproof stainless steel louvers.
Integrated one-way flap.
Connection piece flat duct rectangular DN 150.

Planning notes
Direct connection of flat rectangular duct DN 150 without connecting pieces.
Wall breakthrough 230 x 110 mm.

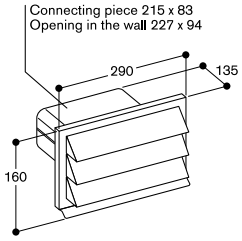

AjMadison
Your Appliance Authority™
800-570-3355

AD 700 051
Wall outlet
Stainless steel
DN 200 cylindric

Little loss of airflow due to large stainless steel outlet louvers.

Features
Weatherproof stainless steel louvers.
Integrated one-way flap.
Connection piece DN 200 cylindrical

Planning notes
For use with telescopic wall-duct AD 702
Wall breakthrough ø 210 mm

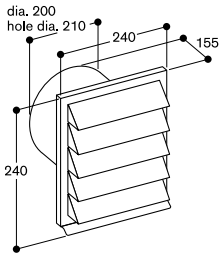

AD 702 052
Telescopic wall-duct
DN 200 cylindric

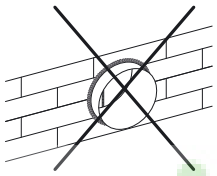

Features
Connection piece DN 200 cylindrical.
Integrated one-way flap.

Planning notes
For use with wall outlet AD 700 051 or remote fan unit AR 401.
Wall breakthrough ø 210 mm.

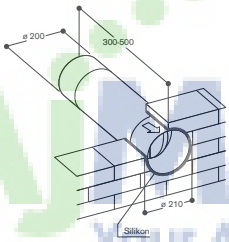

AA 401 610
Silencer for air outlet of AR 401
Stainless steel
Not to be combined with air outlet cover AA 401 400

AD ... .9.
Ceiling collar for air ducts
Stainless steel/aluminium-lacquered

Covers the fixing screws of wall and island air ducts as well as uneven gaps at not exactly horizontal ceilings.
Allows the installation of cusomised one-piece wall ducts and island ducts without telescope.

Features
Ceiling fixture for duct and clip-on cover in the color of duct.

Planning notes
Available for most of the Gaggenau duct dimensions to fit with standard ducts.
Order customised ducts separately.

Air baffle
LS 041 000
for VL 040/041
next to gas appliance.

Air baffle
LL 010 000
Fitted on upper cabinet above blow-out opening, recirculating air.
This accessory prevents soiling of the ceiling.
For AH 900/250, AF 280.

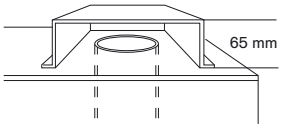

Silencer
SD 011 150
for DN 150.
Silencer length1120 mm.
Silence reduction with straight installation
approx. 2 dB(A), bent
approx. 3–4 dB(A).

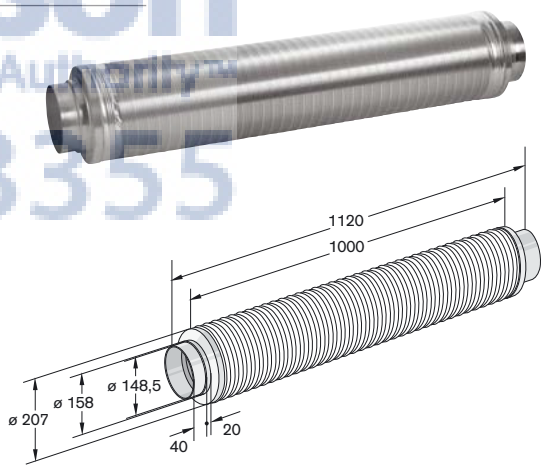

Metal grease filters for retrofitting
FF 250 055
AH 250 161
FF 900 056
AH 900 161/171
FF 900 091
AH 900/191

Activated charcoal filters for retrofitting
KF 273 198
AH 198 150/170, AH 273 150/170, AC 402, AW 900 161/171
KF 900 090
AH 900 191
KF 250 055
AH 250 161, 60 cm wide
KF 280 002
AF 280 160/170/190
KF 001 010
AW/AI 200/280/400, AW 210
AA 480 180
AW/AI 480 (set of 2)
AA 409 101
AT 400 101
AA 409 131
AT 400 131
AA 413 160
AR 413 120

AJ Madison
Your Appliance Authority
800-570-3355

Flat duct system AD 8... Not permitted in combination with gas cooktops		Flat duct	Flat duct bend 90° vertical	Flat duct bend 90° horizontal	Flat duct bend 15° horizontal	Flat duct connection piece for VL 414
Material		Plastic	Plastic	Plastic	Plastic	Metal zinc plated
Length	mm	1,000				
DN 150	AD .5. ...	AD 852 010	AD 852 030	AD 852 031	AD 852 032	AD 854 046
DN 125	AD .2. ...	AD 822 010	AD 822 030	AD 822 031	AD 822 032	
Universal	AD .9. ...					
Connecting pieces necessary for combination						
with 1 straight duct	Pieces	1	0	0	0	1
with 1 bend	Pieces	0	0	0	0	0
with flexible ducting	Pieces	–	–	–	–	–
Planning notes		DN 125 only recommended to connect pairs of VL 431/430 or VL 041/040 with remote fan unit AR	Use short piece of straight duct to connect two bends of 90°	Use short piece of straight duct to connect two bends of 90°	For compensation of straight ducts out of line or non-rectangular bends.	One piece needed for each VL 041/040 to be connected to flat ducts. Outlet to the left/right possible.

Cylindric ducts AD 7...		Flexible duct cylindrical	Duct cylindrical	Duct bend 90°	Cylindrical duct connection piece for VL	Cylindrical duct connection - additional adaptor for VL 414 left/right	Condensation trap
Material		Aluminium	Plastic	Plastic	Metal zinc plated	Metal zinc plated	Plastic
Length	mm	1,000 - 3,000	1,000	210	140		
DN 200	AD .0. ...	AR 050 200					
DN 150	AD .5. ...	AD 751 010	AD 752 010	AD 752 030			AD 752 070
DN 125	AD .2. ...	AD 721 010			AD 724 040	AD 724 041	
Universal	AD .9. ...						
Connecting pieces necessary for combination							
with 1 straight duct	Pieces	–	1	0	0	0	0
with 1 bend	Pieces	–	0	–	0	0	–
with flexible ducting	Pieces	1	–	–	0	0	0
Planning notes		Recommended only for non-linear or non-rectangular ductings or cylindrical wall or ceiling ducts. 2 hose clamps included. Press the duct wall at the ends to fit properly to all connection pieces.	For the connection of hoods directly beneath the wall outlet.	For the connection of hoods directly beneath the wall outlet.	One piece needed for each VL 414/041/040 to be connected to cylindrical ducts DN 125. Outlet to the left/right/bottom possible. For connection left/right of VL 414 additional adaptor AD 724 041 necessary.	One piece needed for each VL 414 to be connected to cylindrical ducts DN 125 to the left/right.	Recommended below longer vertical ducts.

AjMadison
Your Appliance Authority
800-570-3355

Flat duct connection piece for VL 041/040	Flat duct adapter cylindrical	Flat duct adapter cylindrical 90°	Air collector box flat duct	Flat duct connection piece	Adhesive tape for duct components
Metal zinc plated	Plastic	Plastic	Metal zinc plated	Plastic	Plastic
	190			85	10m/roll
AD 854 042	AD 852 041	AD 852 042	AD 854 044	AD 852 040	
AD 824 042	AD 822 041			AD 822 040	
					AD 990 090
1	Flat 0 / Cylindrical 0	Flat 0 / Cylindrical 0	1	1	
0	–	–	0	0	
–	RV ...	0	–	–	
One piece needed for each VL 041/040 to be connected to flat ducts. Outlet to the left/rigth possible.	For connection of flat duct DN 150 to wall outlet or remote fan unit with round connection pieces. Connect flexible cylindrical ducting with connecting pieces RV.	Direct connection to flexible ducting.	2x DN 150 air intake 1x DN 150 air outlet For connecting the flat ducts of 2 filtermodules AC 402 with a control or light module inbetween.		Necessary for all connections of duct components

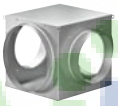

Silencer	Y-joint DN 150/125	Air collector box cylindrical duct	Pipe adapter	Pipe connection piece for cylindrical duct	Pipe connection piece for flexible duct	Adhesive tape for duct components
	Plastic	Metal zinc plated	Metal zinc coated/plastic	Plastic	Metal zinc coated	Plastic
1,110	170			85		10m/roll
			AD 702 042		RV 040 200	
SD 011 150	AD 754 044	AD 704 044	UR 020 151	AD 754 090	RV 040 150	
					RV 030 125	
						AD 990 090
0	–	–	0	–	–	
–	–	–	–	–	–	
0	0	0	0			
Silence reduction with straight installation approx 2 dB(A), bend approx 3–4 dB(A).	Recommended to connect pairs of VL 414 or VL 041/040 to one round floor breakthrough DN 150.	2x DN 150 air intake 2x DN 200 air outlet Cover for 1 outlet DN 200 included.				Necessary for all connections of duct components

AjMadison
Your Appliance Authority
800-570-3355

Appliance type		Ceiling ventilation	Ceiling ventilation	Ceiling ventilation	Ceiling ventilation
Series		–	–	–	–
		Filter module	Control module	Control module	Light module
Stainless steel		AC 402 180	AC 482 180	AC 462 180	AC 472 180
Aluminium					
Air extraction / recirculation		•/•			
Dimensions					
Width of overall frame	(cm)	80	80	80	80
Depth of overall frame	(cm)	40	14	14	14
Height in lower cabinet / ceiling	(cm)	8.5	8.5	8.5	8.5
Net weight	(kg)	8	9	9	9
Air extraction performance (DIN EN 61591) with fan units, min / max / Int		**Airflow per remote fan unit with one filter module[2]**			
Exhaust air with AR 400 131 for inside installation, outlet DN 150	(m³/h)	360/690/810	–	–	–
Exhaust air with AR 400 140 for inside installation, outlet DN 200	(m³/h)	390/870/1,010	–	–	–
Exhaust air with AR 401 131 for outside installation	(m³/h)	260/480/690	–	–	–
Exhaust air with AR 401 140 for outside installation	(m³/h)	320/710/870	–	–	–
Recirculation air with AR 413 120 for inside installation[2]	(m³/h)	–	–	–	–
Features					
Metal grease filter		Rim extraction			
Fan levels	(No.)		3	3	
Intensive mode			•	•	
Run-on function			•	•	
Interval ventilation					
Grease filter saturation indicator optically / acoustically			–/•	–/•	
Infrared remote control			•	•	
Function indicators / display			•/–	•/–	
Halogen lighting	(W)		2x20		2x20
Illuminance	(lx)				
Exhaust air connection bottom/side/top/back		–/–/•/–			
Exhaust air connection piece DN 125 cylindrical duct		–			
Exhaust air connection piece DN 150 cylindrical duct		•			
Exhaust air connection piece DN 125 rectangular flat duct		–			
Exhaust air connection piece DN 150 rectangular flat duct		AD 852 042[1]			
Connecting cable length	(m)		1.3	1.3	
Minimum clearance above cooking area					
For gas appliances with total connected load gas of less / more than 12 kW	(cm)	70/70	70/70	70/70	70/70
For electric appliances	(cm)	70	70	70	70
Connection					
Total connected load	(W)		depending on fan unit	depending on fan unit	
Radio frequency interference-suppressed		•	•	•	•

AiMadison Your Appliance Authority 800-570-3355

• Standard. – Not available.

[1] Special accessory.

[2] For configurations with more than one filter module per fan unit up to 70 m³/h can be added.

AjMadison
Your Appliance Authority™
800-570-3355

Appliance type		Table ventilation	Table ventilation	Table ventilation	Table ventilation
Series		–	–	–	–
Stainless steel		AL 400 120	AL 400 190	AT 400 131	AT 400 101
Aluminium					
Air extraction / recirculation		•/•	•/•	•/•	•/•
Dimensions					
Height of overall frame	(cm)	0.3	0.3	–	–
Installation conventionally / flush		•/•	•/•	•/–	•/–
Extending height	(cm)	33	33		
Width on worktop	(cm)	118.4	90.8	136.2	105.7
Width in lower cabinet	(cm)	114	86	116	86
Depth on worktop	(cm)	14	14	19	19
Height in lower cabinet conventionally / flush	(cm)	55 – 86	55 – 86	67 – 80	67 – 80
Net weight	(kg)	49	38	81	62
Air extraction performance (DIN EN 61591), min/max/Int					
Air recirculation	(m^3/h)			410/680/750	410/680/750
Air recirculation	(m^3/h)			410/680/750	410/680/750
Air extraction performance (DIN EN 61591) with fan units, min/max/Int		**with 1 duct**	**with 1 duct**		
Exhaust air with AR 400 131 for inside installation, outlet DN 150	(m^3/h)	320/600/780	320/600/780		
Exhaust air with AR 400 140 for inside installation, outlet DN 200	(m^3/h)	370/760/880	370/760/880		
Exhaust air with AR 401 131 for outside installation	(m^3/h)				
Exhaust air with AR 401 140 for outside installation	(m^3/h)				
Recirculation air with AR 413 120 for inside installation	(m^3/h)				
Exhaust air with AR 403 120 for inside installation	(m^3/h)	NN[2]	NN[2]	–	–
Air extraction performance (DIN EN 61591) with fan units, min/max/Int		**with 2 ducts**	**with 2 ducts**		
Exhaust air with AR 400 131 for inside installation, outlet DN 150	(m^3/h)	330/640/900	330/640/900		
Exhaust air with AR 400 140 for inside installation, outlet DN 200	(m^3/h)	430/880/1,100	430/880/1,100		
Exhaust air with AR 401 131 for outside installation	(m^3/h)	280/520/800	280/520/800		
Exhaust air with AR 401 140 for outside installation	(m^3/h)	380/800/1,000	380/800/1,000		
Recirculation air with AR 413 120 for inside installation[2]	(m^3/h)	230/460/670	230/460/670		
Air extraction performance (DIN EN 61591) with fan units, min/max/Int					
Exhaust air with AR 400 140 for inside installation, outlet DN 200					
Air extraction performance (DIN EN 61591) with fan units, min/max/Int					
Exhaust air with AR 400 140 for inside installation, outlet DN 200					
Features					
Glass cover				AA 400 230[1]	AA 400 200[1]
Closing element					
Extendible ventilation unit		•	•		
Metal grease filter		Stainless steel	Stainless steel	Centrifugal	Centrifugal
Grease drain channel		•	•	•	•
Fan levels	(No.)	3	3	3	3
Intensive mode		•	•	•	•
Run-on function		•	•	•	•
Interval ventilation		•	•	•	•
Grease filter saturation indicator optically/acoustically		•/–	•/–	•/–	•/–
Control panel arrangement		Keys on the front	Keys on the front	Keys on the front	Keys on the front
Infrared remote control					
Function indicators/display		•/–	•/–	•/–	•/–
LED lighting	(W)	2x10	2x10		
Compact fluorescent tube lighting	(W)			36 W	30 W
Illuminance	(lx)	191	191	750	750
Exhaust air connection bottom / side / top / back		•/–/•	•/–/•	•/•/–	•/•/–
Exhaust air connection piece DN 125 cylindrical duct		–	–	–	–
Exhaust air connection piece DN 150 cylindrical duct		AD 754 045[1]	AD 754 045[1]	•	•
Exhaust air connection piece DN 125 rectangular flat duct		–	–	–	–
Exhaust air connection piece DN 150 rectangular flat duct		AD 854 045[1] AD 854 043[1]	AD 854 045[1] AD 854 043[1]	AD 752 030[1] + AD 852 042[1]	AD 752 030[1] + AD 852 042[1]
Motor output	(W)			280	280
Connecting cable length	(m)	1.75	1.75	2.0	2.0
Connection					
Total connected load	(W)	depending on fan unit	depending on fan unit	316	310
Radio frequency interference-suppressed		•	•	•	•

• Standard. – Not available.

[1] Special accessory.

[2] Not known/confirmed before going to print.

Madison
Your Appliance Authority™
800-570-3355

Downdraft	Downdraft	Downdraft
Serie 400	Serie 200	Serie 200
Ventilation element	Control unit	Extension element for VL 041
VL 414 110	VL 041 114	VL 040 114
	VL 041 134	VL 040 134
•/•	•/•	•/•
0.3	0.85	0.85
•/•	•/–	•/–
11	8.5	8.5
8.5	7.8	7.8
51	51	51
17.0/17.3	20/–	20/–
4	4	4
1x VL 414	**VL 041 solo**	
290/480/570	290/570/–	
350/590/670	350/670/–	
190/380/470	200/490/–	
320/530/580	280/560/–	
180/310/430	180/320/430	
NN/750[2]	NN/750[2]	
2x VL 414		**VL 041 + VL 040**
330/630/830		330/830/–
390/830/1,000		390/1,000/–
230/530/730		260/690/–
340/680/800		320/820/–
220/420/600		220/420/600
3x VL 414		
440/880/1,050		
4x VL 414		
490/930/1,100		
•		
Stainless steel	Stainless steel	Stainless steel
•	•	•
3	4	
•		
•		
Knob on the front AA 490 110	Knob on top	
•/–	–/–	
•/•/–	•/•/–	•/•/–
AD 724 040[1]	AD 724 040[1]	AD 724 040[1]
–	–	–
–	AD 822 042[1]	AD 822 042[1]
AD 852 046[1]	AD 852 042[1]	AD 852 042[1]
1.5	1.5	1.0
depending on fan unit	depending on fan unit	depending on fan unit
•	•	•

AJMadison
Your Appliance Authority™
800-570-3355

Appliance type		Island hood	Island hood	Island hood
Stainless steel			AI 400 150	AI 400 120
Aluminium-lacquered				
Stainless steel, motorless		AI 482 180	AI 402 150	AI 402 120
Aluminium-lacquered, motorless				
Air extraction / recirculation		•/•[1]	•/•[1]	•/•[1]
Dimensions with ventilation duct				
Width	(cm)	180	150	120
Depth	(cm)	70	70	70
Height, air extraction / recirculation, min. – max.	(cm)	70 – 140	63 – 139/81 – 139	63 – 139/81 – 139
Net weight, min. – max.	(kg)	51 – 68	44 – 46	34 – 36
Air extraction duct weight, min. – max.	(kg)	12 – 24	8 – 14	8 – 14
Air extraction performance (EN 61591), min / max / Int				
Air extraction	(m^3/h)	590/980/1,530	340/720/1,000	340/720/1,000
Air extraction Coanda effect	(m^3/h)			
Air recirculation	(m^3/h)	390/590/730[1]	290/480/500[1]	290/480/500[1]
Air extraction Coanda effect	(m^3/h)			
Max. back pressure at 0 m^3/h	(Pa)		450	450
Sound power level (EN 60704-3) max / Int				
Extraction mode	(dB(A) re 1 pW)	70/72	62/71	62/71
Recirculation mode	(dB(A) re 1 pW)	74[1]/76[1]	73[1]/75[1]	73[1]/75[1]
Sound pressure level (EN 60704-2-13) max / Int				
Extraction mode	(dB (A) re 20 µPa)	56/60	48/57	48/57
Recirculation mode	(dB (A) re 20 µPa)	62/64	59/61	59/61
Air extraction performance (EN 61591) with fan units, min / max / Int		**2 x AR + AA 090**	**Outlet DN 200**	**Outlet DN 200**
AR 400 131 for inside installation, intake DN 150	(m^3/h)	620/1,380/1,700	310/690/850	310/690/850
AR 400 140 for inside installation, intake DN 150	(m^3/h)	820/1,760/2,140	410/880/1,070	410/880/1,070
AR 401 131 for outside installation, intake DN 150	(m^3/h)	540/1,080/1,420	270/490/710	270/490/710
AR 401 140 for outside installation, intake DN 150	(m^3/h)	660/1,420/1,760	330/710/880	330/710/880
Features				
Coanda effect				
Glass cover			•	•
Rim extraction / rim extraction filters			•/•	•/•
Stainless steel grease filter		•		
Fan output levels	(No.)	3	3	3
Intensive mode		•	•	•
Run-on function		•	•	•
Interval ventilation		•	•	•
Grease filter saturation indicator		•	•	•
Function indicators		2	2	2
Halogen lighting	(W)	4 x 20	4 x 20	3 x 20
Compact fluorescent tube lighting				
Illumiance	(lx)	420	500	520
Soft-Light		•	•	•
Exhaust air connection piece	(ø mm)	150	150	150
Exhaust air connection piece, top / side / rear / front S = specially produced		•/S/S/S	•/S/S/S	•/S/S/S
Fans	(No.)	2	1/0	1/0
Fan output	(W)		275	260
Connecting cable length	(m)	1.5	1.2	1.2
Minimum clearance above cooking area				
For gas appliances with total connected load gas of less / more than 12 kW	(cm)	65/70	70/70	70/70
For electric appliances	(cm)	55	60	60
Connection				
Total connected load	(W)	depending on fan unit	435	320
Radio frequency interference-suppressed		•	•	•

• Standard. – Not available.

[1] If the air output is high during the air circulation mode, a considerable drop in output and clearly increased noise in comparison with air extraction is to be expected.

[2] The Coanda effect allows for operation at lower output levels.

AjMadison
Your Appliance Authority™
800-570-3355

Island hood	Island hood	Island hood	Island hood	Island hood
AI 280 120	AI 200 102	AI 220 120	AI 220 100	AI 220 190
AI 281 120	AI 201 102	AI 221 120	AI 221 100	
	AI 202 102			
	AI 203 102			
•/•	•/•[1]	•/•[1]	•/•[1]	•/•[1]
120	100	120	100	90
70	65	70	70	60
67 – 138/84 – 138	64 – 140/82 – 140	65 – 149/65 – 159	65 – 149/65 – 159	65 – 149/65 – 159
41 – 45	25 – 33	37 – 39	33 – 35	29 – 31
8 – 14	8 – 14	7 – 15	7 – 15	7 – 15
280/470/640[2]	300/520/750	320/620/800	320/540/730	320/540/730
45/120/120				
160/240/260[1]	230/400/470[1]	240/420/480[1]	240/390/460	240/390/460
65/80/80				
500	425	460	450	450
63[2]/70	61/68	59/65	56/65	56/65
68[2]/75	71[1]/74[1]	70[1]/73[1]	68/72	68/72
49/55	47/54	44/51	42/51	42/51
54/60	57/60	56/59	54/58	54/58
	Outlet DN 200			
	310/690/850			
	410/880/1,070			
	270/490/710			
	330/710/880			
•				
		•/•	•/•	•/•
•	•			
3	3	3	3	3
•	•	•	•	•
•	•	•	•	•
•	•	•	•	•
•	•	•	•	•
2	1	1	1	1
	4 x 20	4 x 20	4 x 20	4 x 20
2 x 36				
913	540			
•	•	•	•	•
150	150	150	150	150
•/S/S/S	•/S/S/S	•/S/S/S	•/S/S/S	•/S/S/S
1	1/0	1	1	1
260	215	260	215	215
1.2	1.2	1.2	1.2	1.2
65/70	65/70	65/70	65/70	65/70
55	60	55	55	55
332	295	340	295	295
•	•	•	•	•

AjMadison
Your Appliance Authority™
800-570-3355

Appliance type		Wall hood	Wall hood	Wall hood
Stainless steel			AW 400 150	AW 400 120
Aluminium-lacquered				
Stainless steel, motorless		AW 482 180	AW 402 150	AW 402 120
Aluminium-lacquered, motorless				
Air extraction / recirculation		•/•[1]	•/•[1]	•/•[1]
Dimensions with ventilation duct				
Width	(cm)	180	150	120
Depth	(cm)	52	55	55
Height, air extraction / recirculation, min. – max.	(cm)	70 – 140	64 – 142/75 – 142	64 – 142/75 – 142
Net weight, min. – max.	(kg)	35 – 50	38 – 40	30 – 37
Air extraction duct weight, min. – max.	(kg)	7 – 11	7 – 11	7 – 11
Air extraction performance (EN 61591), min / max / Int				
Air extraction	(m^3/h)	590/980/1,530	300/580/800	300/580/800
Air extraction Coanda effect	(m^3/h)			
Air recirculation	(m^3/h)	390/590/730[1]	240/420/490[1]	240/420/490[1]
Air extraction Coanda effect	(m^3/h)			
Max. back pressure at 0 m^3/h	(Pa)		490	410
Sound power level (EN 60704-3) max / Int				
Extraction mode	(dB(A) re 1 pW)	70/72	59/70	59/70
Recirculation mode	(dB(A) re 1 pW)	74[1]/76[1]	71[1]/75[1]	71[1]/75[1]
Sound pressure level (EN 60704-2-13) max / Int				
Extraction mode	(dB (A) re 20 µPa)	56/60	45/56	45/56
Recirculation mode	(dB (A) re 20 µPa)	62/64	57/61	57/61
Air extraction performance (unobstructed) with fan units, min / max / Int		**2 x AR + AA 090**	**Outlet DN 200**	**Outlet DN 200**
AR 400 131 for inside installation, intake DN 150	(m^3/h)	620/1,380/1,700	310/690/850	310/690/850
AR 400 140 for inside installation, intake DN 150	(m^3/h)	820/1,760/2,140	410/880/1,070	410/880/1,070
AR 401 131 for outside installation, intake DN 150	(m^3/h)	540/1,080/1,420	270/490/710	270/490/710
AR 401 140 for outside installation, intake DN 150	(m^3/h)	660/1,420/1,760	330/710/880	330/710/880
Features				
Coanda effect				
Glass cover			•	•
Rim extraction / rim extraction filters			•/•	•/•
Stainless steel grease filter		•	•	•
Fan output levels	(No.)	3	3	3
Intensive mode		•	•	•
Run-on function		•	•	•
Interval ventilation		•	•	•
Grease filter saturation indicator		•	•	•
Function indicators		•	•	•
Halogen lighting	(W)	4x20	4x20	3x20
Compact fluorescent tube lighting				
Illuminance	(lx)	290	420	520
Soft-Light		•	•	•
Exhaust air connection piece	(ø mm)	150	150	150
Exhaust air connection piece, top / side / rear /front S = specially produced		•/S/•/S	•/S/•/S	•/S/•/S
Fans	(No.)	2	1/0	1/0
Fan output	(W)		260	260
Connecting cable length	(m)	1.3	1.2	1.2
Minimum clearance above cooking area				
For gas appliances with total connected load gas of less / more than 12 kW	(cm)	65/70	70/70	70/70
For electric appliances	(cm)	55	60	60
Connection				
Total connected load	(W)	depending on fan unit	340	320
Radio frequency interference-suppressed		•	•	•

• Standard. – Not available.

[1] If the air output is high during the air circulation mode, a considerable drop in output and clearly increased noise in comparison with air extraction is to be expected.

[2] The Coanda effect allows for operation at lower output levels.

AjMadison
Your Appliance Authority™
800-570-3355

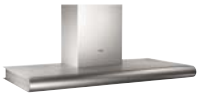
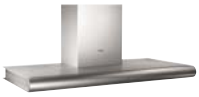

Wall hood	Wall hood	Wall hood	Wall hood	Wall hood	Wall hood
AW 400 190	AW 280 120	AW 280 190	AW 200 120	AW 200 192	AW 200 172
	AW 281 120	AW 281 190		AW 201 192	AW 201 172
AW 402 190				AW 202 192	
•/•[1]	•/•	•/•	•/•[1]	•/•	•/•
90	120	90	120	90	70
55	54	54	56	56	56
65 – 142/76 – 142	65 – 141/76 – 141	65 – 141/76 – 141	65 – 142/76 – 142	65 – 142/76 – 142	65 – 142/76 – 142
25 – 32	33 – 35	29 – 31	24	21 – 28	22 – 25
7 – 11	7 – 11	7 – 11	7 – 11	7 – 11	7 – 11
270/520/740	270/450/610[2]	270/440/600[2]	270/520/740	250/450/650	250/450/650
	50/80/80	50/80/80			
230/400/470[1]	170/250/300	170/250/300	230/400/470[1]	190/340/430	190/340/430
	70/100/100	70/100/100			
410	410	405	425	380	380
57/66	61[2]/69	61/69	58/66	57/65	57/65
69[1]/71[1]	70[2]/72	70/72	71[1]/74[1]	66/71	66/71
41/52	47/54	47/54	44/52	43/51	43/51
55/57	56/60	56/60	57/60	52/57	52/57
Outlet DN 200				Outlet DN 200	
310/690/850				310/690/850	
410/880/1,070				410/880/1,070	
270/490/710				270/490/710	
330/710/880				330/710/880	
	•	•			
•					
•/•					
•	•	•	•	•	•
3	3	3	3	3	3
•	•	•	•	•	•
•	•	•	•	•	•
•	•	•	•	•	•
•	•	•	•	•	•
•	•	•	•	•	•
3x20			3x20	3x20	3x20
	2x36	2x36			
520	962	1,276	350	400	480
•			•	•	•
150	150	150	150	150	150
•/S/•/S	•/S/•/S	•/S/•/S	•/S/•/S	•/S/•/S	•/S/•/S
1/0	1	1	1	1/0	1/0
215	215	215	160	160	160
1.2	1.2	1.2	1.3	1.3	1.3
70/70	70/70	70/70	65/70	65/70	65/70
60	60	60	60	60	60
275	295	295	280	220	220
•	•	•	•	•	•

AjMadison
Your Appliance Authority™
800-570-3355

Appliance type		Wall hood	Wall hood	Wall hood
Stainless steel		AW 210 190	AW 210 170	AW 220 120
Aluminium-lacquered		AW 211 190		AW 221 120
Stainless steel, motorless				
Aluminium-lacquered, motorless				
Air extraction / recirculation		•/•	•/•	•/•
Dimensions with ventilation duct				
Width	(cm)	90	70	120
Depth	(cm)	48	48	50
Height, air extraction / recirculation, min. – max.	(cm)	65 – 142/76 – 142	65 – 142/76 – 142	65 – 141/65 – 152
Net weight, min. – max.	(kg)	19	16	27 – 29
Air extraction duct weight, min. – max.	(kg)	7 – 11	7 – 11	4 – 10
Air extraction performance (EN 61591), min / max / Int				
Air extraction	(m^3/h)	250/450/650	250/450/650	310/510/720
Air extraction Coanda effect	(m^3/h)			
Air recirculation	(m^3/h)	190/340/430	190/340/430	230/380/440
Air extraction Coanda effect	(m^3/h)			
Max. back pressure at 0 m^3/h	(Pa)	380	380	470
Sound power level (EN 60704-3) max / Int				
Extraction mode	(dB(A) re 1 pW)	57/65	57/65	58/64
Recirculation mode	(dB(A) re 1 pW)	66/71	66/71	68/71
Sound pressure level (EN 60704-2-13) max / Int				
Extraction mode	(dB (A) re 20 µPa)	43/51	43/51	44/50
Recirculation mode	(dB (A) re 20 µPa)	52/57	52/57	54/57
Air extraction performance (unobstructed) with fan units, min / max / Int				
AR 400 131 for inside installation, intake DN 150	(m^3/h)			
AR 400 140 for inside installation, intake DN 150	(m^3/h)			
AR 401 131 for outside installation, intake DN 150	(m^3/h)			
AR 401 140 for outside installation, intake DN 150	(m^3/h)			
Features				
Coanda effect				
Glass cover				
Rim extraction / rim extraction filters				•/•
Stainless steel grease filter		•	•	•
Fan output levels	(No.)	3	3	3
Intensive mode		•	•	•
Run-on function		•	•	•
Interval ventilation		•	•	•
Grease filter saturation indicator		•	•	•
Function indicators		•	•	•
Halogen lighting	(W)	3 x 20	3 x 20	4 x 20
Compact fluorescent tube lighting				
Illuminance	(lx)	400	480	520
Soft-Light		•	•	•
Exhaust air connection piece	(ø mm)	150	150	150
Exhaust air connection piece, top / side / rear /front S = specially produced		•/S/•/S	•/S/•/S	•/S/•/S
Fans	(No.)	1	1	1
Fan output	(W)	160	160	215
Connecting cable length	(m)	1.3	1.3	1.3
Minimum clearance above cooking area				
For gas appliances with total connected load gas of less / more than 12 kW	(cm)	65/70	65/70	65/70
For electric appliances	(cm)	60	60	55
Connection				
Total connected load	(W)	220	220	295
Radio frequency interference-suppressed		•	•	•

• Standard. – Not available.

[1] If the air output is high during the air circulation mode, a considerable drop in output and clearly increased noise in comparison with air extraction is to be expected.

[2] The Coanda effect allows for operation at lower output levels.

AjMadison
Your Appliance Authority™
800-570-3355

Wall hood	Wall hood
AW 220 190	AW 220 170
AW 221 190	AW 221 170
•/•	•/•
90	70
50	50
65 – 141/65 – 152	65 – 141/65 – 152
22 – 24	19 – 21
4 – 10	4 – 10
310/510/720	310/510/720
230/380/440	230/380/440
470	470
58/64	58/64
68/71	68/71
44/50	44/50
54/57	54/57
•/•	•/•
•	•
3	3
•	•
•	•
•	•
•	•
•	•
3 x 20	2 x 20
520	500
•	•
150	150
•/S/•/S	•/S/•/S
1	1
215	215
1.3	1.3
65/70	65/70
55	55
275	255
•	•

AjMadison
Your Appliance Authority™
800-570-3355

Flat kitchen hoods.

Appliance type		Flat kitchen hood	Flat kitchen hood	Flat kitchen hood
Stainless steel-coloured		AH 900 191/171/161		
Aluminium			AH 250 161	AF 280 190/170/160
Air extraction / recirculation		•/•	•/•	•/•
Dimensions				
Width	(cm)	90; 70; 60	60	90; 70; 60
Depth	(cm)	30	30	28
Depth when steam screen extended	(cm)	48	48	43
Height	(cm)	43	50	48
Net weight	(kg)	20; 17; 16	15	17; 14; 14
Air extraction performance (EN 61591), min / max / Int				
Air extraction	(m^3/h)	290/440/600	220/360/500	230/450/700
Air recirculation	(m^3/h)	160/280/370	140/210/300	170/330/430
Max. back pressure at 0 m^3/h	(Pa)	460	370	420
Sound power level (EN 60704-3) max / Int				
Extraction mode	(dB(A) re 1 pW)	54/62	61/70	59/62
Recirculation mode	(dB(A) re 1 pW)	64/71	64/74	64/69
Sound pressure level (EN 60704-2-13) max / Int				
Extraction mode	(dB (A) re 20 µPa)	40/48	47/55	47/50
Recirculation mode	(dB (A) re 20 µPa)	50/57	49/59	52/57
Features				
Glass screen		•	•	
Metal grease filter type		Drawer	Drawer	Cartridges
Fan output levels	(No.)	3	3	3
Intensive mode		•	•	•
Run-on function		•	•	•
Interval ventilation		•		•
Grease filter saturation indicator		•	•	•
Arrangement of controls		Buttons at front	Buttons on right	Buttons variable
Function indicators / display		•/–	•/–	–/•
Halogen lighting	(W)			3 x 20; 2 x 20; 2 x 20
Compact fluorescent tube lighting	(W)	2 x 24; 36; 36	36	
Illumiance	(lx)	650; 680; 680	560	500; 450; 450
Soft-Light				•
Exhaust air connection piece	(ø mm)	150	125/100	150/125
Exhaust air connection piece, top / side / rear / front / S = specially produced		•/–/–/–	•/–/–/–	•/–/–/–
Fans	(No.)	1	2	1
Fan output	(W)	190	2x115	200
Connecting cable length	(m)	1.5	1.5	1.5
Minimum clearance above cooking area				
For gas appliances with total connected load gas of less / more than 12 kW	(cm)	60/70	60/70	65/70
For electric appliances	(cm)	47	47	43
Connection				
Total connected load	(W)	240; 230; 230	280	260; 240; 240
Radio frequency interference-suppressed		•	•	•

• Standard. – Not available.

AiMadison
Your Appliance Authority™
800-570-3355

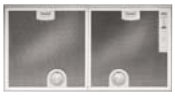

Appliance type		Canopy extractor	Canopy extractor
Stainless steel-coloured		AH 273 170/150	AH 198 170/150
Air extraction / recirculation		•/•	•/•
Dimensions			
Width	(cm)	73/53	73/53
Depth	(cm)	34.6	34.6
Height	(cm)	31 (housing)	16 (housing)
Net weight	(kg)	11/10	9/8
Air extraction performance (EN 61591), min / max / Int			
Air extraction	(m^3/h)	220/400/600	240/400/650
Air recirculation	(m^3/h)	180/320/420	190/320/430
Max. back pressure at 0 m^3/h	(Pa)	360	400
Sound power level (EN 60704-3) max / Int			
Extraction mode	(dB(A) re 1 pW)	58/67	59/70
Recirculation mode	(dB(A) re 1 pW)	61/69	64/72
Sound pressure level (EN 60704-2-13) max / Int			
Extraction mode	(dB (A) re 20 µPa)	46/55	47/58
Recirculation mode	(dB (A) re 20 µPa)	49/57	52/60
Features			
Glass screen			
Metal grease filter type		Cartridges	Cartridges
Fan output levels	(No.)	3	3
Intensive mode		•	•
Run-on function			
Interval ventilation			
Grease filter saturation indicator			
Arrangement of controls		Bottom slide	Bottom slide
Function indicators / display			
Halogen lighting	(W)	2 x 20	2 x 20
Compact fluorescent tube lighting	(W)		
Illumiance	(lx)	360	360
Soft-Light			
Exhaust air connection piece	(ø mm)	150/120	150/120
Exhaust air connection piece, top / side / rear / front / S = specially produced		•/–/–/–	•/–/–/–
Fans	(No.)	1	2
Fan output	(W)	200	2 x 100
Connecting cable length	(m)	1.3	1.3
Minimum clearance above cooking area			
For gas appliances with total connected load gas of less / more than 12 kW	(cm)	65/70	65/70
For electric appliances	(cm)	65	65
Connection			
Total connected load	(W)	240	240
Radio frequency interference-suppressed		•	•

• Standard. – Not available.

AjMadison
Your Appliance Authority™
800-570-3355

Version		Outside wall	Outside wall
Stainless steel		AR 401 140	AR 401 131
Metal zinc plated			
Air extraction / recirculation		•/–	•/–
Installation possibility			
Slanted roof (not Eternit)		AA 401 910[1]	AA 401 910[1]
Outside wall		•	•
Inside wall			
Bottom cupboard			
Attic			
Cellar			
Dimensions			
Width	(mm)	366	366
Depth	(mm)	257	257
Height	(mm)	460	460
Net weight	(kg)	15	13
Air extraction performance (EN 61591), Levels 1 / 2 / 3 / 4[3]		**DN 200**	**DN 200**
Air extraction	(m³/h)	400/550/860/1,100	310/450/590/850
Recirculation	(m³/h)		
Max. back pressure at 0 m³/h	(Pa)	605	505
Features			
Exhaust air intake connection piece	(ø mm)	200	200
Exhaust air outlet connection piece	(ø mm)	–	–
Fans	(No.)	1	1
Fan output	(W)	520	355
Connecting cable length	(m)	1	1
Additional connector pair for extension		•	•
Ratings in combination with extraction element			
Radio frequency interference-suppressed		•	•

• Standard. – Not available.

[1] Special accessory.

[2] Depending on ventilation appliance levels are used 1–4 or as 1/2/3/Intensive.

[3] Not known / confirmed before going to print.

[4] Available 2. quarter 2013.

AjMadison
Your Appliance Authority™
800-570-3355

Inside	Inside	Plinth	Inside recirculation
AR 400 140	AR 400 131	AR 403 120[4]	AR 413 120
•/–	•/–	•/–	–/•
•	•		•
•	•	•	•
•	•		•
•	•		•
511	511	407	600
425	425	445	480
256	256	99	255
15	13	8	19
DN 200	DN 150	DN 150	
460/650/930/1,210	360/530/700/950	NN/750[3]	
			230/330/480/700
600	520	NN[3]	
200/4x150	200/4x150	1x150	2x150
200	200	221	
1	1	1	1
520	355	150	150
1	1	1	1
•	•		
•	•	•	•

AjMadison
Your Appliance Authority™
800-570-3355

AJMadison
Your Appliance Authority™
800-570-3355

Cooling appliances.

Overviews.	256
Vario cooling 400 series: Cooling, freezing and wine.	260
Planning notes Vario cooling 400 series.	268
Special accessories Vario cooling 400 series.	270
Vario cooling 200 series: Cooling and freezing.	274
Other cooling appliances.	287
Wine.	294
Accessories / Special accessories.	300
Technical specifications.	306

AjMadison
Your Appliance Authority™
800-570-3355

Vario cooling 400 series

Niche 213 cm

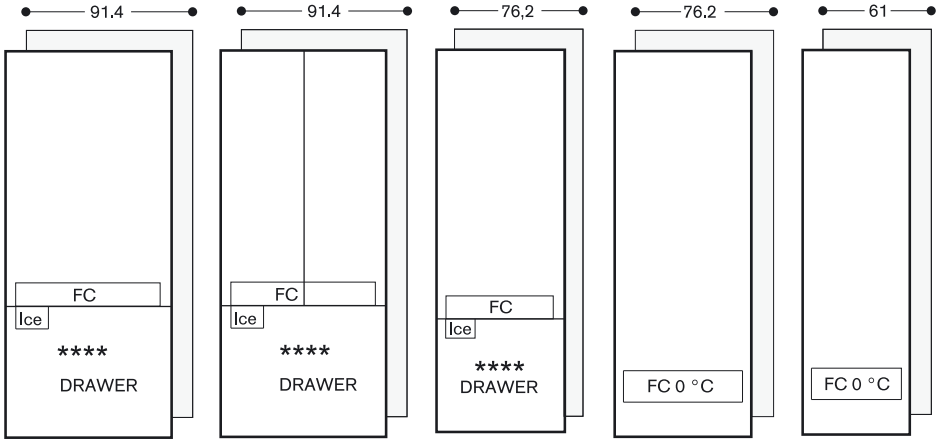

RB 491 RY 491 RB 472 RC 472 RC 462

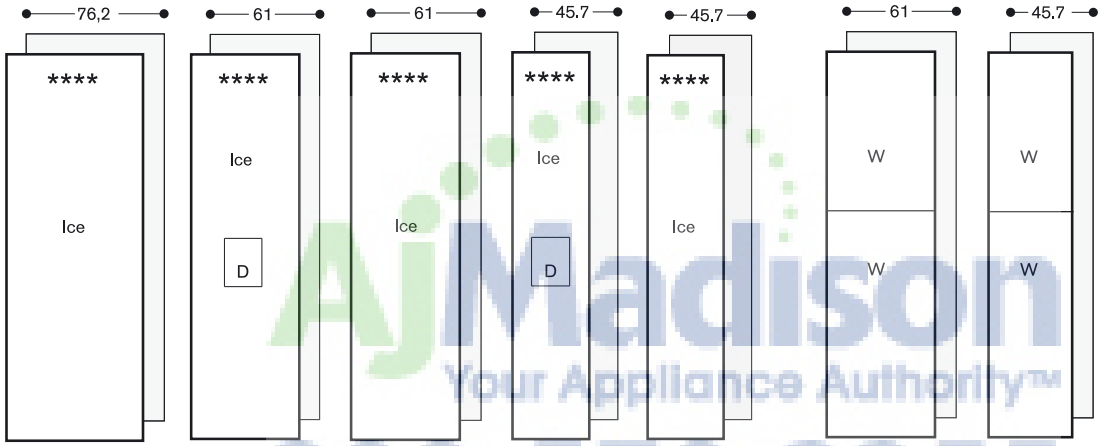

RF 471 RF 463 RF 461 RF 413 RF 411 RW 464 RW 414

AjMadison
Your Appliance Authority™
800-570-3355

FC: Fresh cooling

FC 0 °C: Fresh cooling to 0 °C

W: Wine

D: Ice and water dispenser

Ice: Ice maker

Vario cooling 200 series

Height 178 cm

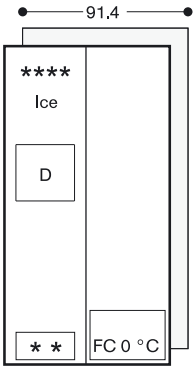

Niche 178 cm

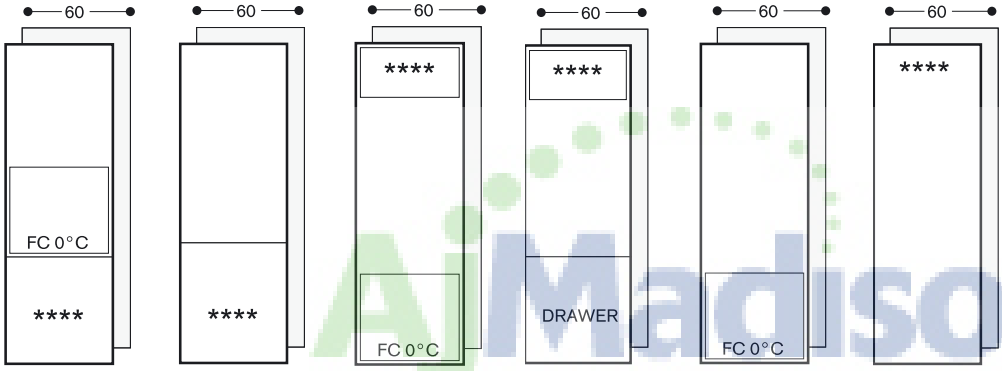

AiMadison
Your Appliance Authority™
800-570-3355

Niche 140 cm

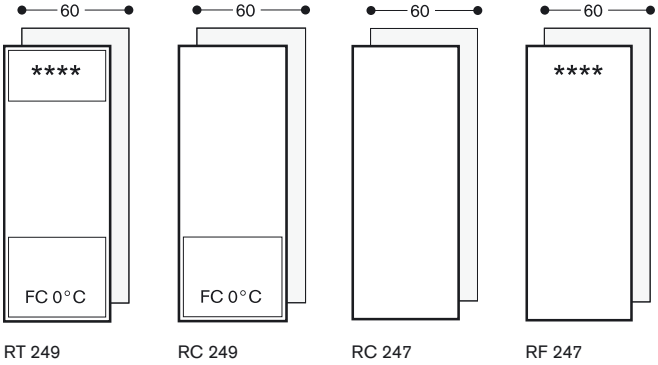

Other cooling appliances

Height 200 cm

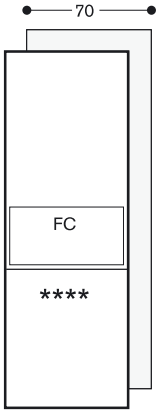

RB 292

Niche 178 cm

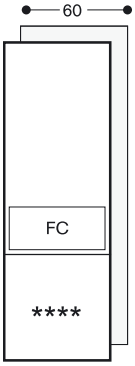

RB 282

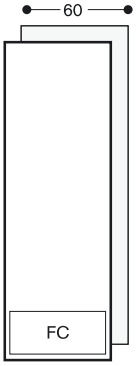

RC 282

Niche 140 cm

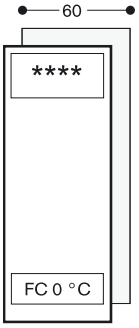

RT 242

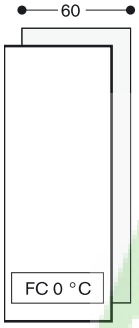

RC 242

Niche 123 cm

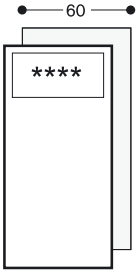

RT 220

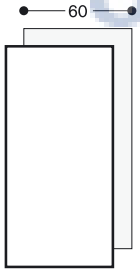

RC 220

Niche 82 cm / Under-counter

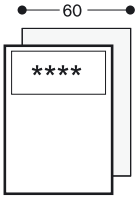

RT 200

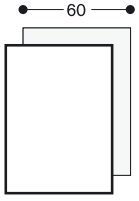

RC 200

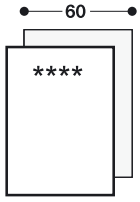

RF 200

AjMadison
Your Appliance Authority™
800-570-3355

Wine climate cabinet

Niche 213 cm

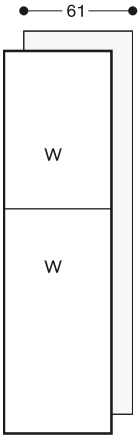

RW 464

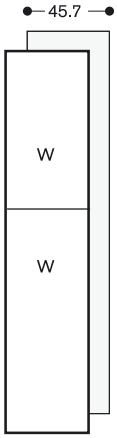

RW 414

Height 185 cm

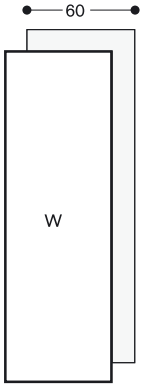

RW 262

AjMadison
Your Appliance Authority™
800-570-3355

Niche 123 cm

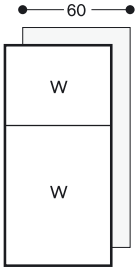

RW 424

Niche 82 cm / Under-counter

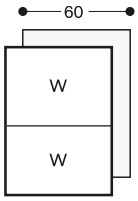

RW 404

RY 491 200
with fresh cooling
fully integrated
Niche width 91.4 cm,
Niche height 213.4 cm
With two doors

▼ Available 2. quarter 2013

Included in the price
1 egg holder with lid
1 ice cube scoop

Necessary installation accessories
RA 460 000
Accessory for side-by-side installation.
RA 460 011
Additional side heating element.

Installation accessories
GF 111 100▼
Descaling and neutralising filter
GF 121 110▼
Filter cartridge
RA 421 912
Stainless steel door panels with handles
For RY 491, panel thickness 19 mm.
RA 421 932
Aluminium door panels with handles
For RY 491, panel thickness 19 mm.
RA 423 910
Cladding set in stainless steel
For freestanding RB/RY 491 (side walls, top, plinth panel).
Door panels and ventilation grille in stainless steel must be ordered separately.
Cladded appliance measurements overall:
Width 96 cm, height 215 cm, depth 63 cm.
Appliance must be fixed to the wall at the top rear.
RA 425 110
Handle bar, stainless steel, long
With 3 mounts, length 1,131 mm, drilling distance between each mount 554 mm.
RA 425 130
Handle bar, aluminium, long
With 3 mounts, length 1,131 mm, drilling distance between each mount 554 mm.
RA 425 910
Handle bar, stainless steel, short
With 2 mounts, length 810 mm, drilling distance between the mounts 787 mm.
RA 425 930
Handle bar, aluminium, short
With 2 mounts, length 810 mm, drilling distance between the mounts 787 mm.
RA 460 030
Connecting element for vertically split fronts (for fridge-freezer combination)
RA 461 911
Ventilation grille stainless steel
For RB491 and RY491.

Vario fridge-freezer combination 400 series
RY 491

- Stainless steel interior
- Generous lighting concept
- Solid aluminium door racks
- Net volume 530 litres
- Integrated ice maker with fixed inlet water connection
- One motorised glass shelf, adjustable when fully loaded
- Fully extendable freezer drawer with practical divider
- Energy efficiency class A+

Handling
Electronic temperature control with digital display.

Technical Features
Dynamic cold air distribution.
Automatic defrosting with defrost water evaporation.
Antimicrobial activated charcoal air filter.
Energy-saving vacation mode.
Open-door and malfunction alarm.

Cooling
Net volume 367 litres.
No-frost technology with fast cooling.
Temperature adjustable from +2 °C to +8 °C.
2 safety glass shelves, 1 of which is motorised.
1 asymmetrically split safety glass shelf, manually adjustable.
2 fully extendable drawers with transparent front.
Bright interior lighting with light pillars and 2 ceiling spots.
4 height adjustable door racks, 2 of which are extra deep.
2 door racks with transparent front flap.

Fresh cooling
Net volume 25 litres.
No-frost technology.
1 full width fully extendable fresh cooling drawer with transparent front, manually controllable.

Freezing
Net volume 138 litres.
No-frost technology with fast freezing.
Temperature adjustable from -14 °C to -25 °C.
4-star freezer compartment.
Freezing capacity 23 kg/24 h.
Storage time after a malfunction 22 h.
2 fully extendable drawers.
Interior lighting with 2 spots.

Ice maker
Integrated in the freezer compartment, with fixed inlet water connection.
Can be switched off.
Ice cube production approx. 1.7 kg/24 h.
Removable ice storage container with approx. 2 kg capacity.

Consumption data
Energy consumption 420 kwh/year.
Noise level 42 dB (re 1 pW).

Special accessories
RA 030 100
Storage container with transparent lid

product design award 2008

DESIGNPREIS 2009 SILBER

Planning notes
Flat hinge.
Door opening angle of 115°, fixable at 90°.
Max. door panel weight:
Each door 57 kg.
Drawer 10 kg.
Shut-off valve for water connection must be planned next to the appliance and always be accessible.

Please read additional planning notes on page 268/269.

Connection
Total connected load 0.574 kW.
Connecting cable 2.0 m with plug.
Water inlet.
Supply hose 2.0 m with 3/4 " connection.
Water pressure 2.4 to 8.3 bar.

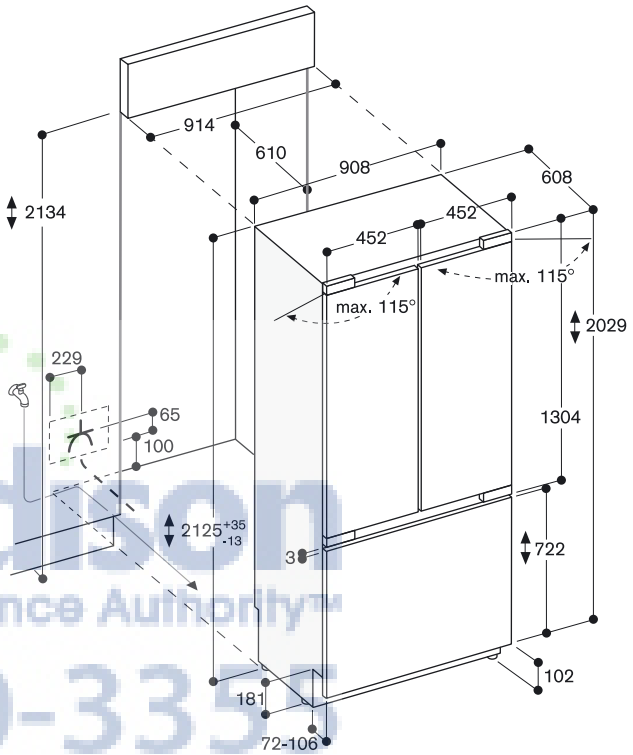

The maximum door front dimensions are based on a clearance of 3 mm.

AjMadison
Your Appliance Authority™
800-570-3337

RB 491 200
with fresh cooling
fully integrated
Niche width 91.4 cm,
Niche height 213.4 cm
With one door

▾ Available 2. quarter 2013

Included in the price
1 egg holder with lid
1 ice cube scoop

Necessary installation accessories
RA 460 000
Accessory for side-by-side installation.
RA 460 011
Additional side heating element.

Installation accessories
GF 111 100▾
Descaling and neutralising filter
GF 121 110▾
Filter cartridge
RA 421 910
Stainless steel door panels with handles
For RB 491, panel thickness 19 mm.
RA 421 930
Aluminium door panels with handles
For RB 491, panel thickness 19 mm.
RA 423 910
Cladding set in stainless steel
For freestanding RB/RY 491 (side walls, top, plinth panel).
Door panels and ventilation grille in stainless steel must be ordered separately.
Cladded appliance measurements overall:
Width 96 cm, height 215 cm, depth 63 cm.
Appliance must be fixed to the wall at the top rear.
RA 425 110
Handle bar, stainless steel, long
With 3 mounts, length 1,131 mm, drilling distance between each mount 554 mm.
RA 425 130
Handle bar, aluminium, long
With 3 mounts, length 1,131 mm, drilling distance between each mount 554 mm.
RA 425 910
Handle bar, stainless steel, short
With 2 mounts, length 810 mm, drilling distance between the mounts 787 mm.
RA 425 930
Handle bar, aluminium, short
With 2 mounts, length 810 mm, drilling distance between the mounts 787 mm.
RA 460 030
Connecting element for vertically split fronts (for fridge-freezer combination)
RA 461 911
Ventilation grille stainless steel
For RB491 and RY491.

Vario fridge-freezer combination 400 series
RB 491

- Stainless steel interior
- Generous lighting concept
- Solid aluminium door racks
- Net volume 530 litres
- Integrated ice maker with fixed inlet water connection
- One motorised glass shelf, adjustable when fully loaded
- One asymmetricly split glass shelf
- Fully extendable freezer drawer with practical divider
- Energy efficiency class A+

Handling
Electronic temperature control with digital display.

Technical Features
Dynamic cold air distribution.
Automatic defrosting with defrost water evaporation.
Antimicrobial activated charcoal air filter.
Energy-saving vacation mode.
Open-door and malfunction alarm.

Cooling
Net volume 367 litres.
No-frost technology with fast cooling.
Temperature adjustable from +2 °C to +8 °C.
2 safety glass shelves, 1 of which is motorised.
1 asymmetrically split safety glass shelf, manually adjustable.
2 fully extendable drawers with transparent front.
Bright interior lighting with light pillars and 2 ceiling spots.
2 height-adjustable door racks, 1 of which is extra deep.
1 door rack with transparent front flap.

Fresh cooling
Net volume 25 litres.
No-frost technology.
1 full width fully extendable fresh cooling drawer with transparent front, manually controllable.

Freezing
Net volume 138 litres.
No-frost technology with fast freezing.
Temperature adjustable from -14 °C to -25 °C.
4-star freezer compartment.
Freezing capacity 23 kg/24 h.
Storage time after a malfunction 22 h.
2 fully extendable drawers.
Interior lighting with 2 spots.

Ice maker
Integrated in the freezer compartment, with fixed inlet water connection.
Can be switched off.
Ice cube production approx. 1.7 kg/24 h.
Removable ice storage container with approx. 2 kg capacity.

Consumption data
Energy consumption 420 kwh/year.
Noise level 42 dB (re 1 pW).

Special accessories
RA 030 100
Storage container with transparent lid

Planning notes
Flat hinge.
Door hinge right, reversible.
Door opening angle of 115°, fixable at 90°.
Max. door panel weight:
Door 35 kg.
Drawer 10 kg.
Shut-off valve for water connection must be planned next to the appliance and always be accessible.

Please read additional planning notes on page 268/269.

Connection
Total connected load 0.574 kW.
Connecting cable 2.0 m with plug.
Water inlet.
Supply hose 2.0 m with 3/4 " connection.
Water pressure 2.4 to 8.3 bar.

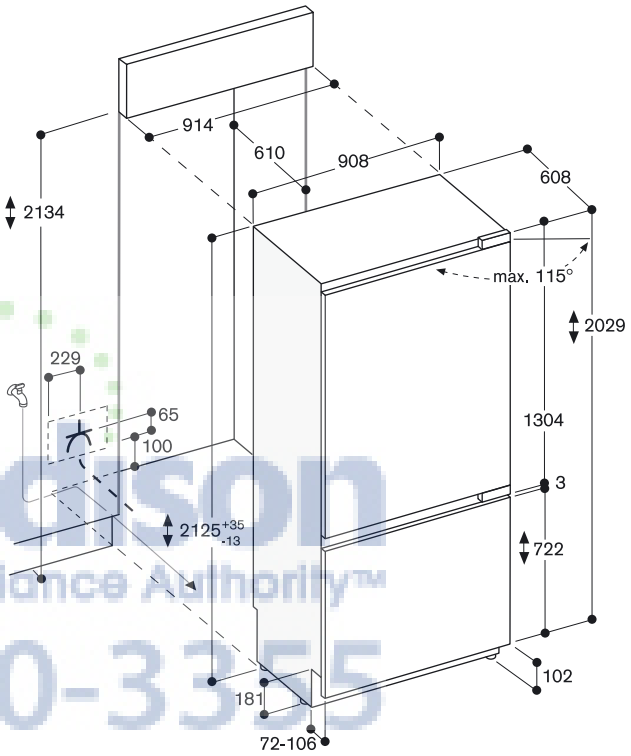

The maximum door front dimensions are based on a clearance of 3 mm.

AJ Madison
Your Appliance Authority™
800-570-3355

RB 472 301▼
with fresh cooling
fully integrated
Niche width 76.2 cm,
Niche height 213.4 cm
With one door

▼ Available 2. quarter 2013

Included in the price
1 egg holder with lid
1 ice cube scoop

Necessary installation accessories
RA 460 000
Accessory for side-by-side installation.
RA 460 011
Additional side heating element.

Installation accessories
GF 111 100▼
Descaling and neutralising filter
GF 121 110▼
Filter cartridge
RA 421 712
Stainless steel door panels with handles
For RB 472, panel thickness 19 mm.
RA 421 732
Aluminium door panels with handles
For RB 472, panel thickness 19 mm.
RA 425 110
Handle bar, stainless steel, long
With 3 mounts, length 1,131 mm, drilling distance between each mount 554 mm.
RA 425 130
Handle bar, aluminium, long
With 3 mounts, length 1,131 mm, drilling distance between each mount 554 mm.
RA 425 710
Handle bar, stainless steel, short
With 2 mounts, length 658 mm, drilling distance between the mounts 637 mm.
RA 425 730
Handle bar, aluminium, short
With 2 mounts, length 658 mm, drilling distance between the mounts 637 mm.
RA 461 715
Ventilation grille stainless steel
For RB472.

Special accessories
RA 030 100
Storage container with transparent lid

Vario fridge-freezer combination
400 series
RB 472

- Stainless steel interior
- Generous lighting concept
- Solid aluminium door racks
- Net volume 438 litres
- Integrated ice maker with fixed inlet water connection
- One motorised glass shelf, adjustable when fully loaded
- Fully extendable freezer drawer with practical divider
- Energy efficiency class A++

Handling
Electronic temperature control with digital display.

Technical Features
Dynamic cold air distribution.
Automatic defrosting with defrost water evaporation.
Antimicrobial activated charcoal air filter.
Energy-saving vacation mode.
Open-door and malfunction alarm.

Cooling
Net volume 300 litres.
No-frost technology with fast cooling.
Temperature adjustable from +2 °C to +8 °C.
3 safety glass shelves, 1 of which is motorised.
1 fully extendable drawer with transparent front.
Bright interior lighting with light pillars.
2 height-adjustable door racks, 1 of which is extra deep.
1 door rack with transparent front flap.

Fresh cooling
Net volume 19 litres.
No-frost technology.
1 full width fully extendable fresh cooling drawer with transparent front, manually controllable.

Freezing
Net volume 119 litres.
No-frost technology with fast freezing.
Temperature adjustable from -14 °C to -25 °C.
4-star freezer compartment.
Freezing capacity 14 kg/24 h.
Storage time after a malfunction 18 h.
2 fully extendable drawers.
Interior lighting with 1 spot.

Ice maker
Integrated in the freezer compartment, with fixed inlet water connection.
Can be switched off.
Ice cube production approx. 1.7 kg/24 h.
Removable ice storage container with approx. 3 kg capacity.

Consumption data
Energy consumption 292 kwh/year.
Noise level 43 dB (re 1 pW).

Planning notes
Flat hinge.
Door hinge right, reversible.
Door opening angle of 115°, fixable at 90°.
Max. door panel weight:
Door 35 kg.
Drawer 10 kg.
Shut-off valve for water connection must be planned next to the appliance and always be accessible.

Please read additional planning notes on page 268/269.

Connection
Total connected load 0.177 kW.
Connecting cable 3.0 m, pluggable.
Water inlet.
Supply hose 2.0 m with 3/4 " connection.
Water pressure 2 to 8 bar.

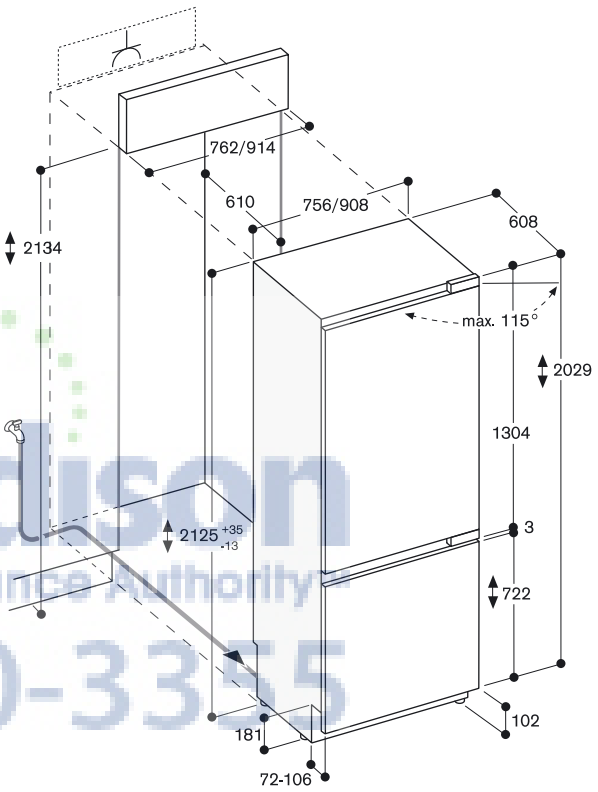

The maximum door panel dimensions are based on a clearance of 3 mm.

AJMadison
Your Appliance Authority
800-570-3355

Vario refrigerator 400 series
RC 462/RC 472

- Stainless steel interior
- Generous lighting concept
- Solid aluminium door racks
- Net volume 365/477 litres
- Fresh cooling drawer, temperature control from 0 °C to 3 °C
- One motorised glass shelf, adjustable when fully loaded
- Energy efficiency class A+

Handling
Electronic temperature control with digital display.

Technical Features
Dynamic cold air distribution with Multi-Air-Flow.
Automatic defrosting with defrost water evaporation.
Antimicrobial activated charcoal air filter.
Energy-saving vacation mode.
Open-door and malfunction alarm.

Cooling
Net volume 314/410 litres.
No-frost technology with fast cooling.
Temperature adjustable from +2 °C to +8 °C.
4 safety glass shelves, 1 of which is motorised, 2 manually adjustable.
2 fully extendable drawers with transparent front, 1 of which deep and 1 shallow.
Bright interior lighting with light pillars and 2 ceiling spots.
3 height adjustable door racks, 1 of which is extra deep.
1 door rack with transparent front flap.

Fresh cooling close to 0 °C
Net volume 51/67 litres.
Separate automatic temperature control, with settings for fish, meat or vegetables.
1 large, fully extendable drawer with transparent front and integrated lighting.

Consumption data
Energy consumption 168/182 kwh/year.
Noise level 40/40 dB (re 1 pW).

Planning notes
Flat hinge.
Door hinge right, reversible.
Door opening angle of 115°, fixable at 90°.
Max. door panel weight 21/35 kg.

Please read additional planning notes on page 268/269.

Connection
Total connected load 0.266/0.311 kW.
Connecting cable 2.0 m with plug.

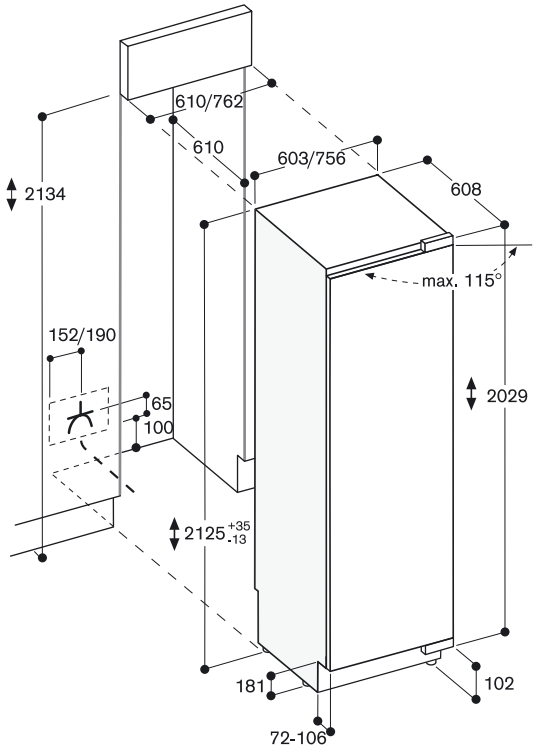

The maximum door front dimensions are based on a clearance of 3 mm.

RC 462 200
fully integrated
Niche width 61 cm,
Niche height 213.4 cm

RC 472 200
fully integrated
Niche width 76.2 cm,
Niche height 213.4 cm

Included in the price
1 egg holder with lid

Necessary installation accessories

RA 460 000
Accessory for side-by-side installation.

RA 460 011
Additional side heating element.

Installation accessories

RA 421 610
Stainless steel door panel with handle
For 61 cm wide appliances, panel thickness 19 mm.

RA 421 630
Aluminium door panel with handle
For 61 cm wide appliances, panel thickness 19 mm.

RA 421 710
Stainless steel door panel with handle
For 76.2 cm wide appliances, panel thickness 19 mm.

RA 421 730
Aluminium door panel with handle
For 76.2 cm wide appliances, panel thickness 19 mm.

RA 425 110
Handle bar, stainless steel, long
With 3 mounts, length 1,131 mm, drilling distance between each mount 554 mm.

RA 425 130
Handle bar, aluminium, long
With 3 mounts, length 1,131 mm, drilling distance between each mount 554 mm.

RA 460 020
Connecting element for vertically split appliance fronts (for a flush front)

RA 460 040
Finger protection for extra long furniture fronts

RA 461 616
Ventilation grille stainless steel
For 61 cm wide appliances.

RA 461 714
Ventilation grille stainless steel
For 76.2 cm wide appliances.

Special accessories

RA 030 100
Storage container with transparent lid

product design award 2008

AJMadison
Your Appliance Authority™
800-570-3355

RF 413 202
fully integrated
Niche width 45.7 cm,
Niche height 213.4 cm
Right-hinged

RF 413 203
fully integrated
Niche width 45.7 cm,
Niche height 213.4 cm
Left-hinged

RF 463 202
fully integrated
Niche width 61 cm,
Niche height 213.4 cm
Right-hinged

RF 463 203
fully integrated
Niche width 61 cm,
Niche height 213.4 cm
Left-hinged

▼ Available 2. quarter 2013

Necessary installation accessories

RA 460 000
Accessory for side-by-side installation.

RA 460 011
Additional side heating element.

Installation accessories

GF 111 100▼
Descaling and neutralising filter

GF 121 110▼
Filter cartridge

RA 422 110
Stainless steel door panel with handle
For 45.7 cm wide appliances, panel thickness 19 mm.

RA 422 130
Aluminium door panel with handle
For 45.7 cm wide appliances, panel thickness 19 mm.

RA 422 610
Stainless steel door panel with handle
For 61 cm wide appliances, panel thickness 19 mm.

RA 422 630
Aluminium door panel with handle
For 61 cm wide appliances, panel thickness 19 mm.

RA 425 110
Handle bar, stainless steel, long
With 3 mounts, length 1,131 mm, drilling distance between each mount 554 mm.

RA 425 130
Handle bar, aluminium, long
With 3 mounts, length 1,131 mm, drilling distance between each mount 554 mm.

RA 460 020
Connecting element for vertically split appliance fronts (for a flush front)

RA 460 040
Finger protection for extra long furniture fronts

Vario freezer 400 series
RF 413/RF 463

- Stainless steel interior
- Integrated ice maker with fixed inlet water connection
- Illuminated dispenser for ice cubes, crushed ice and chilled water
- Solid aluminium door racks
- Net volume 191/294 litres
- Energy efficiency class A+

Handling
Electronic temperature control with digital display.

Technical Features
Dynamic cold air distribution.
Automatic defrosting with defrost water evaporation.
Energy-saving vacation mode.
Open-door and malfunction alarm.

Freezing
No-frost technology with fast freezing.
Temperature adjustable from -14 °C to -25 °C.
4-star freezer compartment.
Freezing capacity 9/14 kg/24 h.
Storage time after a malfunction 10/14 h.
4 solid metal shelves, 2 of which are manually adjustable.
2 fully extendable drawers with transparent front, 1 of which large, 1 regular.
Interior lighting with 2 spots.
1 extra deep door rack.
1 door rack with transparent front flap.

Ice and water dispenser
Illuminated, with pull-down flap to accomodate large pitchers and sport bottles.
Integrated, with fixed inlet water connection.
Can be switched off.
Ice cube production approx. 1.9 kg/24 h.
Ice cubes and crushed ice.
Anti-Clump technology.
Removable ice storage container with approx. 2.5 kg capacity.
Ice water supply approx. 1.5 litres.

Consumption data
Energy consumption 306/354 kwh/year.
Noise level 41/41 dB (re 1 pW).

Planning notes
Flat hinge.
Door opening angle of 115°, fixable at 90°.
Max. door panel weight 57/63 kg.
Shut-off valve for water connection must be planned next to the appliance and always be accessible.

Please read additional planning notes on page 268/269.

Connection
Total connected load 0.55/0.592 kW.
Connecting cable 2.0 m with plug.
Water inlet.
Supply hose 2.0 m with 3/4 " connection.
Water pressure 2.4 to 8.3 bar.

RA 462 110
Ventilation grille stainless steel
For RF 413 202, right-hinged.

RA 462 111
Ventilation grille stainless steel
For RF 413 203, left-hinged.

RA 462 610
Ventilation grille stainless steel
For RF 463 202, right-hinged.

RA 462 611
Ventilation grille stainless steel
For RF 463 203, left-hinged.

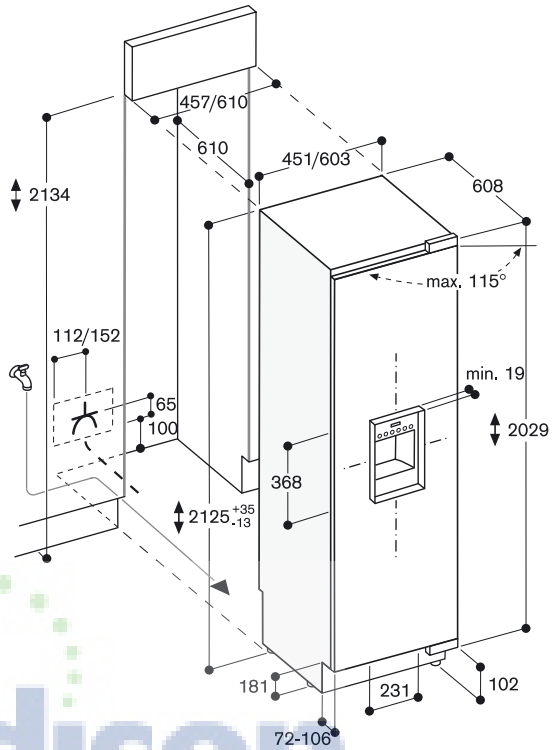

The maximum door front dimensions are based on a clearance of 3 mm.

AiMadison
Your Appliance Authority™
800-570-3355

RF 411 200
fully integrated
Niche width 45.7 cm,
Niche height 213.4 cm

RF 461 200
fully integrated
Niche width 61 cm,
Niche height 213.4 cm

RF 471 200
fully integrated
Niche width 76.2 cm,
Niche height 213.4 cm

▼ Available 2. quarter 2013

Included in the price
1 ice cube scoop

Necessary installation accessories

RA 460 000
Accessory for side-by-side installation.

RA 460 011
Additional side heating element.

Installation accessories

GF 111 100▼
Descaling and neutralising filter

GF 121 110▼
Filter cartridge

RA 421 110
Stainless steel door panel with handle
For 45.7 cm wide appliances, panel thickness 19 mm.

RA 421 130
Aluminium door panel with handle
For 45.7 cm wide appliances, panel thickness 19 mm.

RA 421 610
Stainless steel door panel with handle
For 61 cm wide appliances, panel thickness 19 mm.

RA 421 630
Aluminium door panel with handle
For 61 cm wide appliances, panel thickness 19 mm.

RA 421 710
Stainless steel door panel with handle
For 76.2 cm wide appliances, panel thickness 19 mm.

RA 421 730
Aluminium door panel with handle
For 76.2 cm wide appliances, panel thickness 19 mm.

RA 425 110
Handle bar, stainless steel, long
With 3 mounts, length 1,131 mm, drilling distance between each mount 554 mm.

RA 425 130
Handle bar, aluminium, long
With 3 mounts, length 1,131 mm, drilling distance between each mount 554 mm.

Vario freezer 400 series
RF 411/RF 461/RF 471

- Stainless steel interior
- Solid aluminium door racks
- Net volume 211/314/417 litres
- Integrated ice maker with fixed inlet water connection
- Energy efficiency class A+

Handling
Electronic temperature control with digital display.

Technical Features
Dynamic cold air distribution.
Automatic defrosting with defrost water evaporation.
Energy-saving vacation mode.
Open-door and malfunction alarm.

Freezing
No-frost technology with fast freezing.
Temperature adjustable from -14 °C to -25 °C.
4-star freezer compartment.
Freezing capacity 18/18/20 kg/24 h.
Storage time after a malfunction 14/19/19 h.
4 solid metal shelves, 3 of which are manually adjustable.
2 fully extendable drawers with transparent front, 1 of which large, 1 regular.
Interior lighting with 2 spots.
4 height-adjustable door racks, 1 of which is extra deep.
1 door rack with transparent front flap.

Ice maker
Integrated, with fixed inlet water connection.
Can be switched off.
Ice cube production approx. 1.4 kg/24 h.
Removable ice storage container with approx. 4 kg capacity.

Consumption data
Energy consumption 307/352/424 kwh/year.
Noise level 41/41/42 dB (re 1 pW).

Planning notes
Flat hinge.
Door hinge left, reversible.
Door opening angle of 115°, fixable at 90°.
Max. door panel weight 18/40/56 kg.
Shut-off valve for water connection must be planned next to the appliance and always be accessible.

Please read additional planning notes on page 268/269.

Connection
Total connected load 0.366/0.421/0.501 kW.
Connecting cable 2.0 m with plug.
Water inlet.
Supply hose 2.0 m with 3/4 " connection.
Water pressure 2.4 to 8.3 bar.

RA 460 020
Connecting element for vertically split appliance fronts (for a flush front)

RA 460 040
Finger protection for extra long furniture fronts

RA 461 116
Ventilation grille stainless steel
For 45.7 cm wide appliances.

RA 461 616
Ventilation grille stainless steel
For 61 cm wide appliances.

RA 461 714
Ventilation grille stainless steel
For 76.2 cm wide appliances.

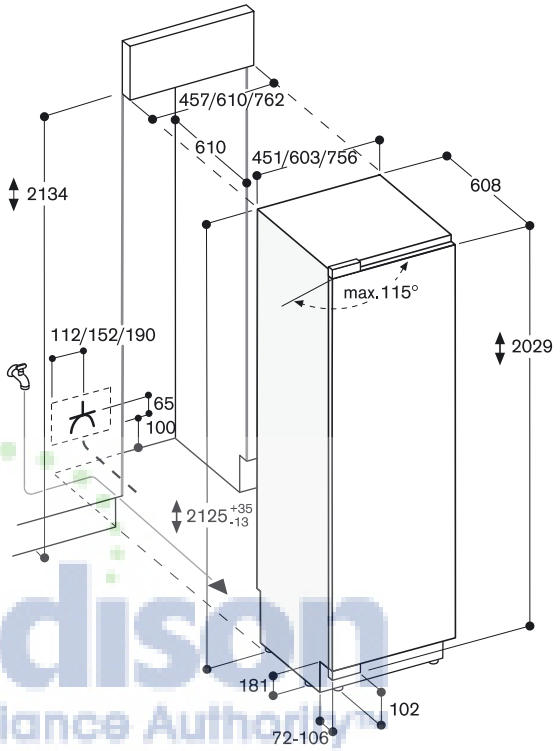

The maximum door front dimensions are based on a clearance of 3 mm.

Madison Your Appliance Authority 800-570-3355

RW 414 361▾
fully integrated, with glass door
Niche width 45.7 cm,
Niche height 213.4 cm

RW 464 361▾
fully integrated, with glass door
Niche width 61 cm,
Niche height 213.4 cm

▾ Available 2. quarter 2013

Necessary installation accessories

RA 460 000
Accessory for side-by-side installation.

RA 460 011
Additional side heating element.

Installation accessories

RA 420 010
Door lock for RW414 and RW464

RA 421 111
Stainless steel door panel frame with handle
For 45.7 cm wide appliances, left-hinged, panel thickness 19 mm.

RA 421 112
Stainless steel door panel frame with handle
For 45.7 cm wide appliances, right-hinged, panel thickness 19 mm.

RA 421 131
Aluminium door panel frame with handle
For 45.7 cm wide appliances, left-hinged, panel thickness 19 mm.

RA 421 132
Aluminium door panel frame with handle
For 45.7 cm wide appliances, right-hinged, panel thickness 19 mm.

RA 421 611
Stainless steel door panel frame with handle
For 61 cm wide appliances, left-hinged, panel thickness 19 mm.

RA 421 612
Stainless steel door panel frame with handle
For 61 cm wide appliances, right-hinged, panel thickness 19 mm.

RA 421 631
Aluminium door panel frame with handle
For 61 cm wide appliances, left-hinged, panel thickness 19 mm.

RA 421 632
Aluminium door panel frame with handle
For 61 cm wide appliances, right-hinged, panel thickness 19 mm.

RA 425 110
Handle bar, stainless steel, long
With 3 mounts, length 1,131 mm, drilling distance between each mount 554 mm.

RA 425 130
Handle bar, aluminium, long
With 3 mounts, length 1,131 mm, drilling distance between each mount 554 mm.

Vario wine climate cabinet 400 series
RW 414/RW 464

- Two independently controllable climate zones
- Consistant temperatures with exact control from +5 °C to +20 °C
- Humidity control
- Stainless steel interior
- Fully extendable bottle trays in beech and aluminium
- Presentation light option
- Low-vibration operation
- Capacity 70/99 bottles

Handling
Electronic temperature control with digital display.

Technical Features
Dynamic cold air distribution.
Automatic defrosting with defrost water evaporation.
Antimicrobial activated charcoal air filter.
UV-protection.
Energy-saving vacation mode.
Open-door and malfunction alarm.

Features
Net volume 275/394 litres.
Capacity 70/99 bottles
(based on 0.75/l standard bottles).
10 fully extendable bottle trays, up to 4 of which for storage of magnum bottles.
Space for max. 13 bottle trays or shelves in aluminium.
Interior lighting with 2 ceiling spots in the upper and 1/2 ceiling spot in the lower climate zone, can be used as presentation light.

Consumption data
Energy efficiency class B/B.
Energy consumption 228/237 kwh/year.
Noise level 42/42 dB (re 1 pW).

Planning notes
Flat hinge.
Door hinge right, reversible.
Door opening angle of 115°, fixable at 90°.
Max. door panel weight 67/72 kg.
No transport/operation above 1,500 m sea level.

Please read additional planning notes on page 268/269.

Connection
Total connected load 0.121/0.131 kW.
Connecting cable 3.0 m, pluggable.

RA 460 040
Finger protection for extra long furniture fronts

RA 461 116
Ventilation grille stainless steel
For 45.7 cm wide appliances.

RA 461 616
Ventilation grille stainless steel
For 61 cm wide appliances.

Special accessories

RA 093 130
Presenters in aluminium for single bottle display (set of 3) for RW 414

RA 093 630
Presenters in aluminium for single bottle display (set of 3) for RW 464

RA 491 131
Fully extendable bottle tray in beech and aluminium
For 45.7 cm wide appliances.

RA 491 631
Fully extendable bottle tray in beech and aluminium
For 61 cm wide appliances.

RA 492 130
Fully extendable shelves in aluminium
For 45.7 cm wide appliances.
Suitable for decanters, open bottles and humidors.

RA 492 630
Fully extendable shelves in aluminium
For 61 cm wide appliances.
Suitable for decanters, open bottles and humidors.

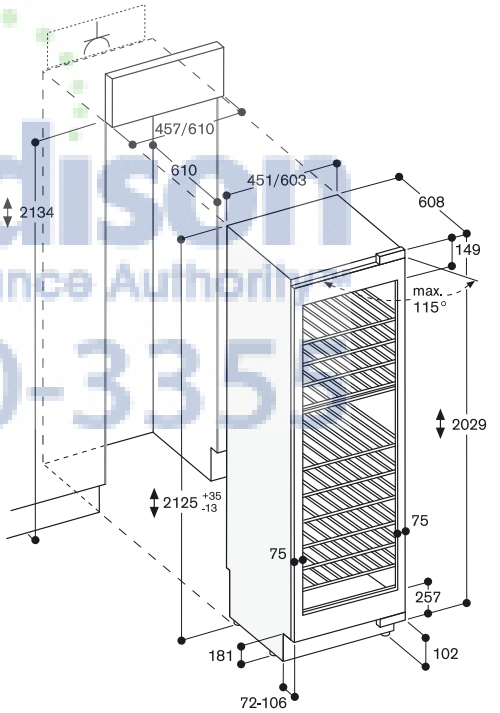

The maximum door panel dimensions are based on a clearance of 3 mm.

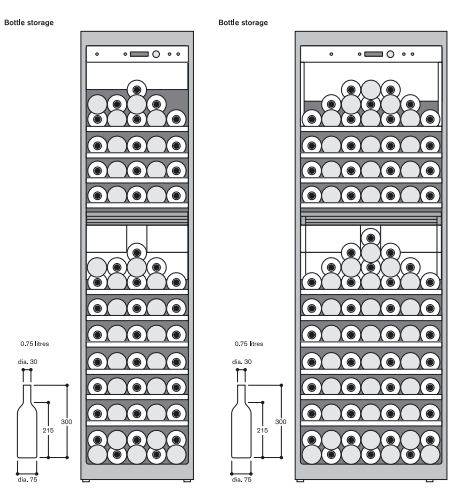

AJMadison
Your Appliance Authority
800-570-3357

RW 414 301▼
fully integrated
Niche width 45.7 cm,
Niche height 213.4 cm

RW 464 301▼
fully integrated
Niche width 61 cm,
Niche height 213.4 cm

▼ Available 2. quarter 2013

Necessary installation accessories

RA 460 000
Accessory for side-by-side installation.

RA 460 011
Additional side heating element.

Installation accessories

RA 420 010
Door lock for RW414 and RW464

RA 421 110
Stainless steel door panel with handle
For 45.7 cm wide appliances, panel thickness 19 mm.

RA 421 130
Aluminium door panel with handle
For 45.7 cm wide appliances, panel thickness 19 mm.

RA 421 610
Stainless steel door panel with handle
For 61 cm wide appliances, panel thickness 19 mm.

RA 421 630
Aluminium door panel with handle
For 61 cm wide appliances, panel thickness 19 mm.

RA 425 110
Handle bar, stainless steel, long
With 3 mounts, length 1,131 mm, drilling distance between each mount 554 mm.

RA 425 130
Handle bar, aluminium, long
With 3 mounts, length 1,131 mm, drilling distance between each mount 554 mm.

RA 460 020
Connecting element for vertically split appliance fronts (for a flush front)

RA 460 040
Finger protection for extra long furniture fronts

RA 461 116
Ventilation grille stainless steel
For 45.7 cm wide appliances.

RA 461 616
Ventilation grille stainless steel
For 61 cm wide appliances.

Special accessories

RA 491 131
Fully extendable bottle tray in beech and aluminium
For 45.7 cm wide appliances.

RA 491 631
Fully extendable bottle tray in beech and aluminium
For 61 cm wide appliances.

Vario wine climate cabinet 400 series
RW 414/RW 464

- Two independently controllable climate zones
- Consistant temperatures with exact control from +5 °C to +20 °C
- Humidity control
- Stainless steel interior
- Fully extendable bottle trays in beech and aluminium
- Presentation light option
- Low-vibration operation
- Capacity 70/99 bottles

Handling
Electronic temperature control with digital display.

Technical Features
Dynamic cold air distribution.
Automatic defrosting with defrost water evaporation.
Antimicrobial activated charcoal air filter.
UV-protection.
Energy-saving vacation mode.
Open-door and malfunction alarm.

Features
Net volume 275/394 litres.
Capacity 70/99 bottles
(based on 0.75/l standard bottles).
10 fully extendable bottle trays, up to 4 of which for storage of magnum bottles.
Space for max. 13 bottle trays or shelves in aluminium.
Interior lighting with 2 ceiling spots in the upper and 1/2 ceiling spot in the lower climate zone, can be used as presentation light.

Consumption data
Energy efficiency class B/B.
Energy consumption 221/237 kwh/year.
Noise level 42/42 dB (re 1 pW).

Planning notes
Flat hinge.
Door hinge right, reversible.
Door opening angle of 115°, fixable at 90°.
Max. door panel weight 74/77 kg.
No transport/operation above 1,500 m sea level.

Please read additional planning notes on page 268/269.

Connection
Total connected load 0.121/0.131 kW.
Connecting cable 3.0 m, pluggable.

RA 492 130
Fully extendable shelves in aluminium
For 45.7 cm wide appliances.
Suitable for decanters, open bottles and humidors.

RA 492 630
Fully extendable shelves in aluminium
For 61 cm wide appliances.
Suitable for decanters, open bottles and humidors.

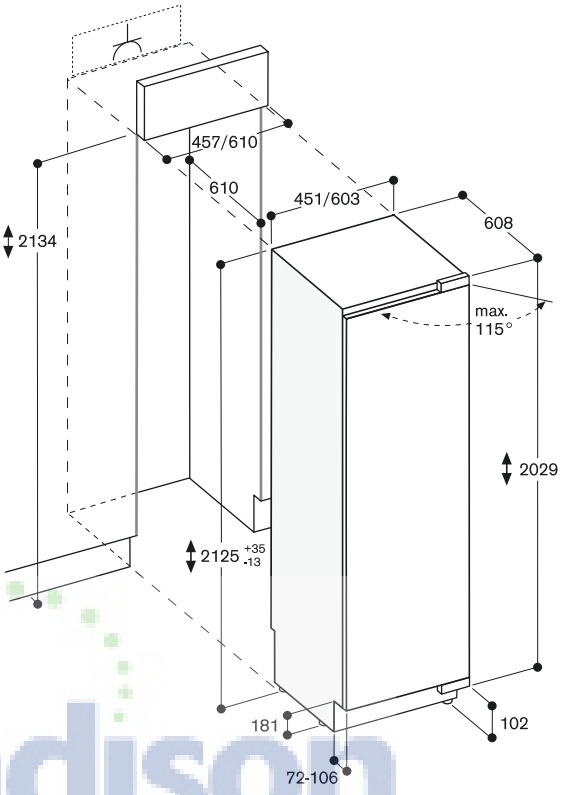

The maximum door panel dimensions are based on a clearance of 3 mm.

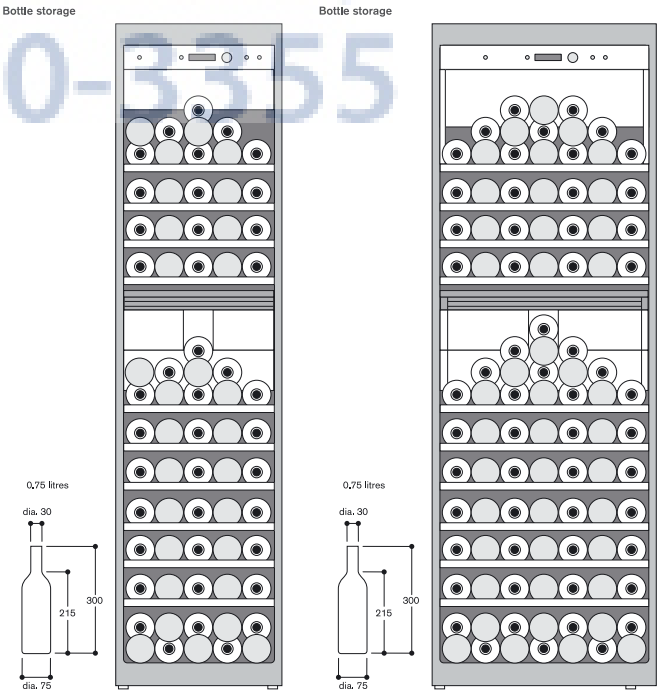

AJMadison
Your Appliance Authority™
800-570-3355

Vario cooling appliances are fixed at the top and bottom of the niche, on the side opposite the hinge. There is no fixation on the hinge side of the appliance, because the finger protection slides in between the appliance and the adjacent cabinetry.
The side walls of the adjacent cabinetry have to be dimensionally stable.

Vario cooling appliances can be installed handle to handle as a side-by-side solution. In this case, the side-by-side installation kit RA 460 000 is required.

With all appliance combinations, the additional heating element RA 460 011 needs to be installed between the appliances to avoid condensation. This additional heating element is not necessary if the distance between the appliances is greater than 160 mm, or when the appliances are installed side-by-side. The heating element does not take up additional space.
It is already included in the niche dimensions and does not interfere with the finger protection.

If Vario cooling appliances are joined together hinge-to-hinge, one must plan an additional, dimensionally stable plinth between the appliances for the finger protection to function properly. If usability limitations are acceptable (opening both appliance doors simultaneously is not possible), appliances can be joined directly, using the additional heating element RA 460 011.

When installing a Vario cooling appliance from the 400 series next to an BO/BM/BS from the ovens 400 series, a lateral distance of 60 mm is required, if the BO/BM/BS handle is on the same side as the Vario cooling appliance door hinge. For the same installation next to an BO/BM/BS from the ovens 200 series, a distance of 40 mm is required.

Installation accessories:

RA 460 000
Accessory for side-by-side installation.

RA 460 011
Additional side heating element.

RA 460 020
Connecting element for vertically split appliance fronts (for a flush front).

RA 460 030
Connecting element for vertically split fronts (for fridge-freezer combination).

RA 460 040
Finger protection for extra long furniture fronts.

Door opening angle

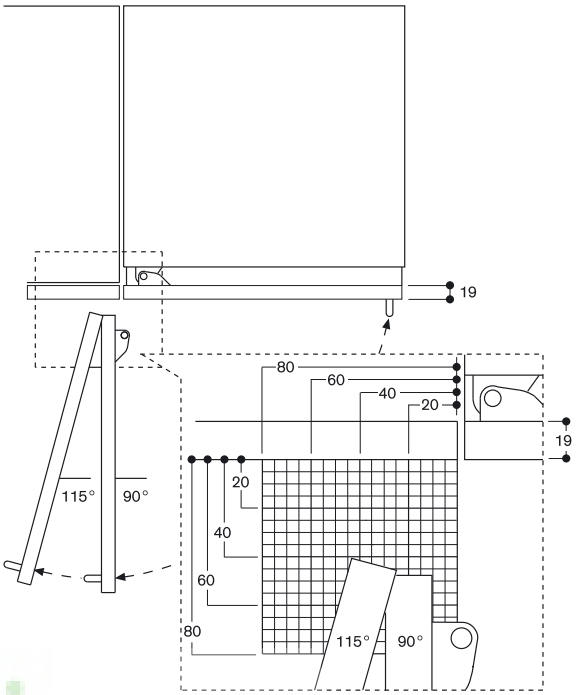

The hinge travel and resulting clearances from adjacent furniture units and handles can be found from the drawing while allowing for the thickness of the front panel. In the drawing, a furniture unit front panel thickness of 19 mm was assumed.

Wall clearance RC/RF/RW

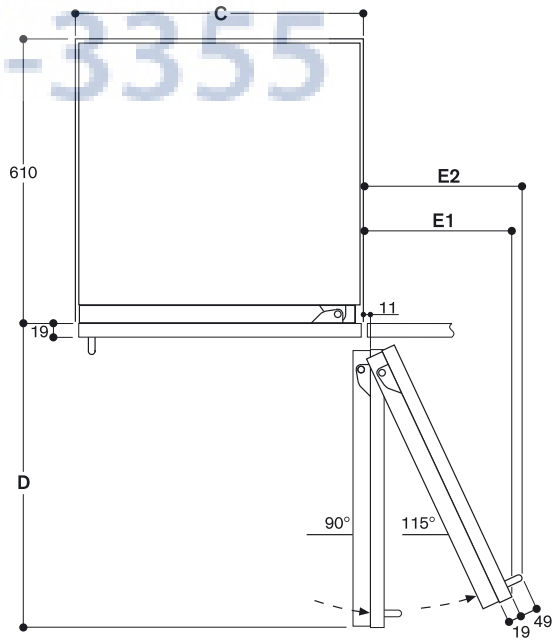

Recess width

C	D	E1	E2
457 mm	525 mm	235 mm	265 mm
610 mm	677 mm	299 mm	330 mm
762 mm	830 mm	363 mm	395 mm

In the drawing, a unit front thickness of 19 mm and a Gaggenau unit handle of 49 mm were taken as a basis.

AjMadison
Your Appliance Authority™
800-570-3355

Wall clearance RB/RY

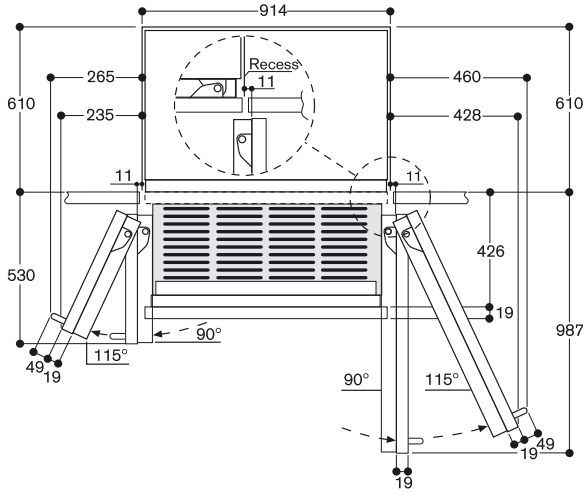

In the drawing, a unit front thickness of 19 mm and a Gaggenau unit handle of 49 mm were taken as a basis.

Recess width 61 cm

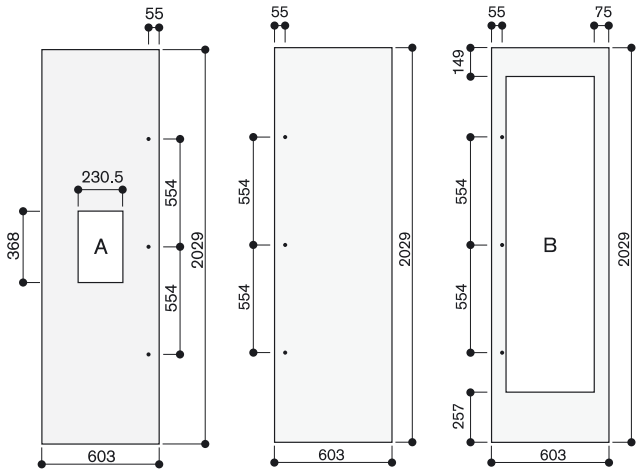

The door panel thickness is 19 mm.
The maximum door panel dimensions are based on a clearance of 3 mm, based on a single recess.
A: The cut-out for the ice and water dispenser is designed so that it is horizontally and vertically centred.
B: Width of the side frame parts of the door panel can be between 65 mm and 82 mm.

Base detail

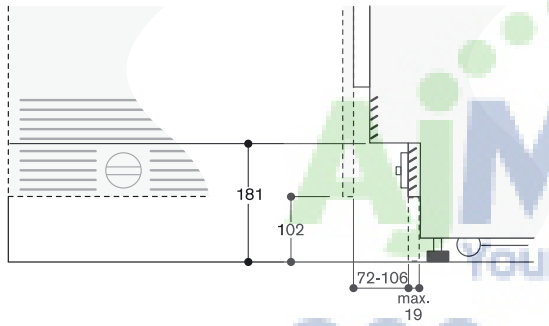

Based on the standard appliance height, the height of the plinth is 102 mm. Maximum plinth thickness 19 mm.

Recess width 76.2 cm

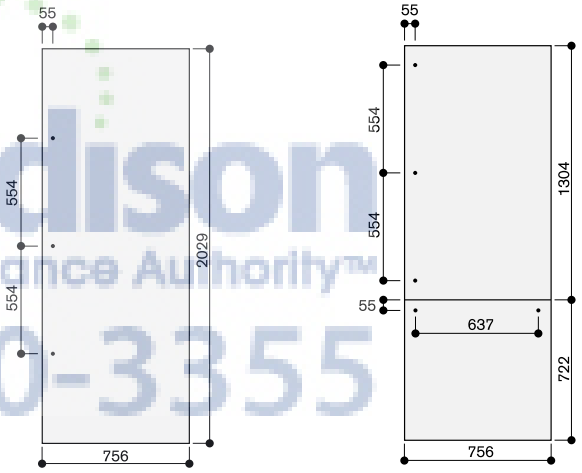

Recess width 45.7 cm

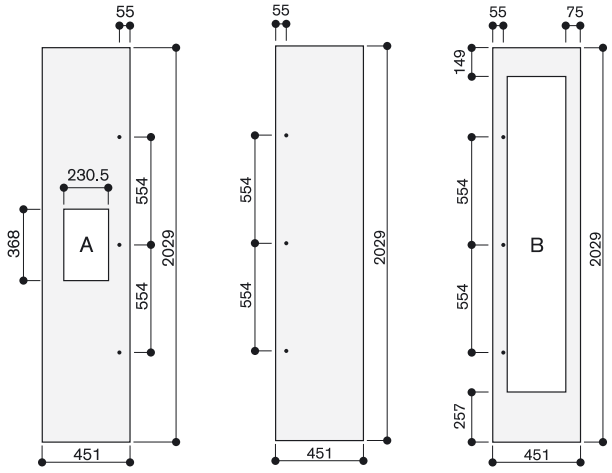

The door panel thickness is 19 mm.
The maximum door panel dimensions are based on a clearance of 3 mm, based on a single recess.
A: The cut-out for the ice and water dispenser is designed so that it is horizontally and vertically centred.
B: Width of the side frame parts of the door panel can be between 65 mm and 82 mm.

Recess width 91.4 cm

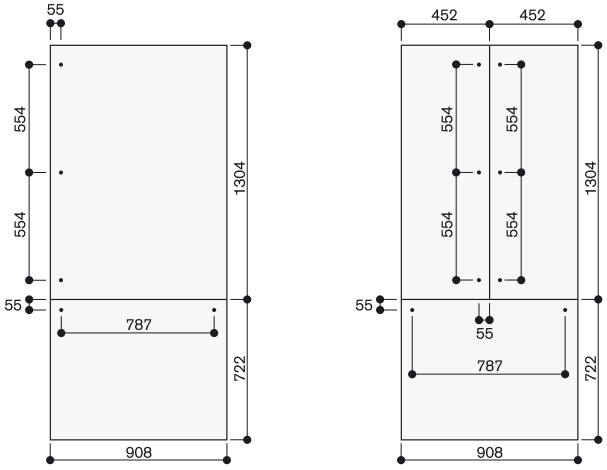

The door panel thickness is 19 mm.
The maximum door panel dimensions are based on a clearance of 3 mm, based on a single recess.

AiMadison
Your Appliance Authority™
800-570-3355

Special accessories for Vario cooling 400 series.

Appliance type		Fridge-freezer combination	Fridge-freezer combination	Fridge-freezer combination	Cooler	Cooler
		RB 491 200	RY 491 200	RB 472 301	RC 462 200	RC 472 200
Door panels / door panel frames						
Stainless steel door panel with handles, panel thickness 19 mm.		RA 421 910	RA 421 912	RA 421 712	RA 421 610	RA 421 710
Aluminium door panel with handles, panel thickness 19 mm.		RA 421 930	RA 421 932	RA 421 732	RA 421 630	RA 421 730
Stainless steel door panel frame with handle, left-hinged, panel thickness 19 mm.						
Stainless steel door panel frame with handle, right-hinged, panel thickness 19 mm.						
Aluminium door panel frame with handle, left-hinged, panel thickness 19 mm.						
Aluminium door panel frame with handle, right-hinged, panel thickness 19 mm.						
RA 420 010	Door lock					
RA 423 910	Cladding set in stainless steel for freestanding RB/RY 491 (side walls, top, plinth panel). Door panels and ventilation grille in stainless steel. must be orderd seperately Cladded appliance measurements overall: Width 96 cm, Height 215 cm, Depth 63 cm. Appliances must be fixed to the wall at the top rear.	•	•			
Ventilation grille						
Stainless steel		RA 461 911	RA 461 911	RA 461 715	RA 461 616	RA 461 714
Stainless steel, right-hinged.						
Stainless steel, left-hinged.						
Interior for wine climate cabinet						
Fully extendable bottle trays in beech and aluminium.						
Fully extendable shelves in aluminium.						
Suitable for decanters, open bottles and humidors.						
Presenter in aluminium for display of single bottles (set of 3).						
Handles						
RA 425 110	Stainless steel, length 1,131 mm with 3 mounts, drilling distance 554 mm each.	•	•	•	•	•
RA 425 130	Aluminium, length 1,131 mm with 3 mounts, drilling distance 554 mm each.	•	•	•	•	•
RA 425 710	Stainless steel, length 658 mm with 2 mounts, drilling distance 637 mm each.	•	•	•		
RA 425 730	Aluminium, length 658 mm with 2 mounts, drilling distance 637 mm each.	•	•	•		
RA 425 910	Stainless steel, length 810 mm with 2 mounts, drilling distance 787 mm each.	•	•			
RA 425 930	Aluminium, length 810 mm with 2 mounts, drilling distance 787 mm each.	•	•			
Miscellaneous						
GF 111 100	Descaling and neutralising filter	•	•	•		
GF 121 110	Filter cartridge	•	•	•		
ET 625 365	Antimicrobial activated charcoal air filter (spare part)	•	•	•	•	•

AJ Madison
Your Appliance Authority™
800-570-3355

Cooler	Cooler	Cooler	Cooler	Cooler	Cooler	Cooler
RF 413 202	RF 413 203	RF 463 202	RF 463 203	RF 411 200	RF 461 200	RF 471 200
RA 422 110	RA 422 110	RA 422 610	RA 422 610	RA 421 110	RA 421 610	RA 421 710
RA 422 130	RA 422 130	RA 422 630	RA 422 630	RA 421 130	RA 421 630	RA 421 730
				RA 461 116	RA 461 616	RA 461 714
RA 462 110		RA 462 610				
	RA 462 111		RA 462 611			
•	•	•	•	•	•	•
•	•	•	•	•	•	•
•	•	•	•	•	•	•
•	•	•	•	•	•	•

AjMadison
Your Appliance Authority™
800-570-3355

Special accessories for Vario cooling 400 series.

Appliance type		Wine climate cabinet	Wine climate cabinet	Wine climate cabinet	Wine climate cabinet
		RW 414 361	RW 464 361	RW 414 301	RW 464 301
Door panels / door panel frames					
Stainless steel door panel with handles, panel thickness 19 mm.				RA 421 110	RA 421 610
Aluminium door panel with handles, panel thickness 19 mm.				RA 421 130	RA 421 630
Stainless steel door panel frame with handle, left-hinged, panel thickness 19 mm.		RA 421 111	RA 421 611		
Stainless steel door panel frame with handle, right-hinged, panel thickness 19 mm.		RA 421 112	RA 421 612		
Aluminium door panel frame with handle, left-hinged, panel thickness 19 mm.		RA 421 131	RA 421 631		
Aluminium door panel frame with handle, right-hinged, panel thickness 19 mm.		RA 421 132	RA 421 632		
RA 420 010	Door lock	•	•	•	•
RA 423 910	Cladding set in stainless steel for freestanding RB/RY 491 (side walls, top, plinth panel). Door panels and ventilation grille in stainless steel. must be orderd seperately Cladded appliance measurements overall: Width 96 cm, Height 215 cm, Depth 63 cm. Appliances must be fixed to the wall at the top rear.				
Ventilation grille					
Stainless steel		RA 461 116	RA 461 616	RA 461 116	RA 461 616
Stainless steel, right-hinged.					
Stainless steel, left-hinged.					
Interior for wine climate cabinet					
Fully extendable bottle trays in beech and aluminium.		RA 491 131	RA 491 631	RA 491 131	RA 491 631
Fully extendable shelves in aluminium.					
Suitable for decanters, open bottles and humidors.		RA 492 130	RA 492 630	RA 492 130	RA 492 630
Presenter in aluminium for display of single bottles (set of 3).		RA 093 130	RA 093 630	RA 093 130	RA 093 630
Handles					
RA 425 110	Stainless steel, length 1,131 mm with 3 mounts, drilling distance 554 mm each.	•	•	•	•
RA 425 130	Aluminium, length 1,131 mm with 3 mounts, drilling distance 554 mm each.	•	•	•	•
RA 425 710	Stainless steel, length 658 mm with 2 mounts, drilling distance 637 mm each.				
RA 425 730	Aluminium, length 658 mm with 2 mounts, drilling distance 637 mm each.				
RA 425 910	Stainless steel, length 810 mm with 2 mounts, drilling distance 787 mm each.				
RA 425 930	Aluminium, length 810 mm with 2 mounts, drilling distance 787 mm each.				
Miscellaneous					
GF 111 100	Descaling and neutralising filter				
GF 121 110	Filter cartridge				
ET 625 365	Antimicrobial activated charcoal air filter (spare part)	•	•	•	•

AJ Madison
Your Appliance Authority™
800-570-3355

AjMadison
Your Appliance Authority™
800-570-3355

RS 295 311
with fresh cooling close to 0 °C
freestanding, stainless steel, fully cladded
Ice and water dispenser, black
Width 91.4 cm, height 178 cm

RS 295 330
with fresh cooling close to 0 °C
freestanding, aluminium, fully cladded
Ice and water dispenser, white
Width 91.4 cm, height 178 cm

Included in the price
1 connection hose
1 wine and champagne rack
1 glass tray
1 egg holder with lid
1 Gastronorm insert, stainless steel, GN 1/3 unperforated
1 Gastronorm lid, stainless steel, 1/3

Special accessories
GN 114 130
Gastronorm insert, stainless steel, GN 1/3
Unperforated, 40 mm deep, 1.5 l.

GN 114 230
Gastronorm insert, stainless steel, GN 2/3
Unperforated, 40 mm deep, 3 l.

GN 410 130
Gastronorm lid, stainless steel, GN 1/3

GN 410 230
Gastronorm lid, stainless steel, GN 2/3

RA 030 100
Storage container with transparent lid

RA 450 000
Mechanical particle filter

RA 450 010
Activated charcoal filter for water filter system including saturation indicator

Roter Punkt

product design award 2011

Vario Side-by-Side 200 series
RS 295

- Unique usage concept:
  - Maximum usage of interior: stepped shelf, full depth shelves as well as integrated fixtures for various containers
  - Easy access: fully extendable shelves and drawers
  - Optimal overview: intelligent lighting concept, use of glass and transparent materials
  - Efficient preparation, cooking and storage with Gaggenau appliances: integration of Gastronorm inserts
- Three climate zones incl. fresh cooling close to 0 °C
- Net volume 516 litres
- Integrated ice maker with fixed inlet water connection
- Illuminated dispenser for ice cubes, crushed ice and chilled water
- Energy efficiency class A+

Handling
Electronic temperature control with temperature display.
Touch keys.

Technical Features
Dynamic cold air distribution.
Energy-saving vacation mode.
Open-door and malfunction alarm.
Child lock.
Top, side panels and ventilation grille in stainless steel.

Cooling
Net volume 320 litres.
Fast cooling.
Automatic defrosting with defrost water evaporation.
Temperature adjustable from +2 °C to +8 °C.
4 safety glass shelves, 2 of which are fully extendable and 1 height adjustable.
Wine and champagne rack for 4 bottles, can be completely folded away.
Fixture for storing glass tray.
2 large door racks with aluminium profile for bottles, 1 of which is height adjustable. With flexible bottle holder.
4 door racks with aluminium profile, 1 of which is height adjustable.
Bright interior lighting with integrated glare-free light elements.
Stepped shelf in aluminium for optimum use of interior and for storing GN inserts.
Possible combinations:
1 x 1/3 GN
2 x 1/3 GN
3 x 1/3 GN
1 x 2/3 GN
1 x 2/3 GN and 1 x 1/3 GN
1 large vegetable drawer.
1 humidity drawer for vegetables.

Fresh cooling close to 0 °C
Net volume 19 litres.
Dynamic cold air distribution.
Separate automatic temperature control, with settings for fish, meat or vegetables.
Automatic defrosting with defrost water evaporation.
Antimicrobial activated charcoal air filter.

Freezing
Net volume 177 litres.
No-frost technology with fast freezing.
Temperature adjustable from - 14 °C to - 24 °C.
Large 4-star freezer compartment.
2 small 2-star areas.
Freezing capacity 12 kg/24 h.
Storage time after a malfunction 16 h.
3 safety glass shelves, 2 of which are height adjustable.
2 large freezer drawers.
All freezer drawers and safety glass shelves can be removed.
1 integrated shelf.
3 door racks with aluminium profile.
Bright interior light.

Ice and water dispenser
Light can be switched on separately.
For large pitchers and sport bottles.
Ice maker integrated in the freezer compartment, with fixed inlet water connection.
Can be switched off.
Ice cube production approx. 1.7 kg/24 h.
Ice cubes and crushed ice.
Anti-Clump technology.
Removable ice storage container with approx. 2 kg capacity.
Fast ice production.
Ice water supply approx. 1 litres.

Consumption data
Energy consumption 459 kwh/year.
Noise level 44 dB (re 1 pW).

Planning notes
The large volume and the high performance of the appliance result in a higher noise level.
Wall recess of 25 mm necessary.
Front and back casters height adjustable from the front by 15 mm.
Door opening angle of both doors 160 °, freezer zone useable at 90 °.
The socket and shut-off valve must be planned next to the appliance and always be accessible.
Weight when empty 183/175 kg.

Connection
Total connected load 0.3 kW.
Connecting cable 2.2 m with plug.
Water inlet.
Supply hose 2.0 m with 3/4 " connection.
Water pressure 2 to 8 bar.

AJMadison
Your Appliance Authority™
800-570-3355

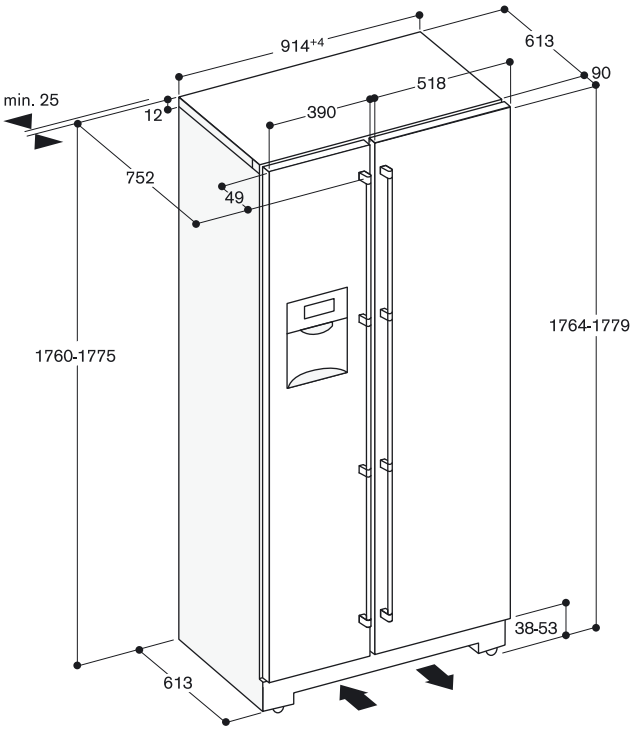

View from the back

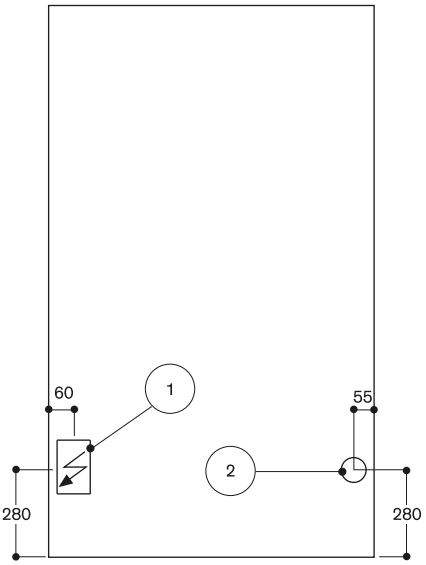

(1) Electrical connection to the appliance
(2) Water connection to the appliance

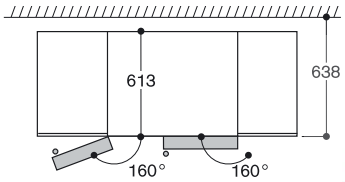

Door opens to 160° when appliance is free-standing or integrated flush with the unit.

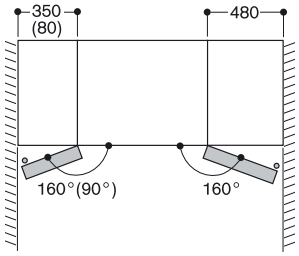

If integrated next to a side wall, there must be a clearance of 350 mm on the left and 480 mm on the right (for a 90° door opening, a clearance of 80 mm is permissible on the left), so that the ice maker and drawers can be removed.

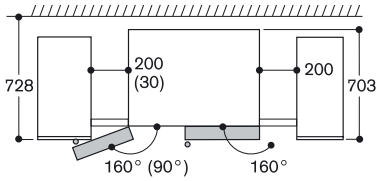

If the appliance is fully integrated, there must be clearances of 200 mm on both sides (for a 90° door opening, a clearance of 30 mm is permissible on the left), so that the ice maker and drawers can be removed (intermediate panels flush with the body).

AjMadison
Your Appliance Authority™
800-570-3355

RB 292 311▼
with fresh cooling
freestanding, stainless steel-backed full glass doors
Width 70 cm, height 200 cm

▼ Available 1. quarter 2013

Included in the price
2 ice packs
1 berry tray
2 egg trays
1 wine and champagne rack
1 glass tray
1 ice cube tray

Special accessories
RA 030 100
Storage container with transparent lid

Fridge-freezer combination
RB 292

- Four climate zones incl. fresh cooling
- Height adjustable safety glass shelves
- Door racks with aluminium profiles
- Net volume 389 litres
- Energy efficiency class A++

Handling
Electronic temperature control with digital temperature display.
Touch keys.

Technical Features
Dynamic cold air distribution.
Open-door and malfunction alarm.
Antimicrobial activated charcoal air filter.
Stainless steel top and side panels.

Cooling
Net volume 261 litres.
No-frost technology with fast cooling.
Automatic defrosting with defrost water evaporation.
Temperature adjustable from +2 °C to +8 °C.
4 safety glass shelves, 3 of which are height adjustable.
Bright interior lighting with integrated glare-free side light elements.
1 large door rack for bottles.
5 door racks.

Fresh cooling
Net volume 46 litres.
Automatic defrosting with defrost water evaporation.
1 full width humidity drawer for vegetables with 24 litres net volume, manually controllable.
1 full width fresh cooling drawer.

Freezing
Net volume 82 litres.
No-frost technology with fast freezing.
Temperature adjustable from -16 °C to -24 °C.
4-star freezer compartment.
Automatic defrosting with defrost water evaporation.
Freezing capacity 18 kg/24 h.
Storage time after a malfunction 16 h.
3 freezer drawers.

Consumption data
Energy consumption 281 kwh/year.
Noise level 43 dB (re 1 pW).

Planning notes
Door hinge right, reversible.
Wall recess of 20 mm necessary.
Door opening angle of 125°, fixable at 90°.
90 mm clearance hinge side for 90 ° door opening, 400 mm for 125 ° door opening and 65 mm handle side necessary.
If integrated in a kitchenette the body of the appliance needs a front overlap of 15 mm. Alternatively an intermediate panel can be used on the hinge side with a recess of 15 mm and a width of min. 30 mm.
Front feet are height-adjustable, casters at the back.

Connection
Total connected load 0.15 kW.
Connecting cable 2.4 m with plug.

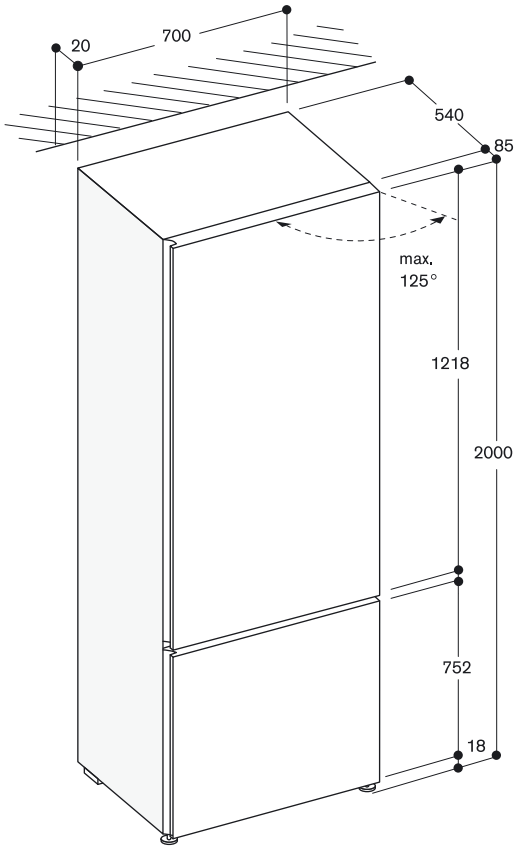

AJMadison
Your Appliance Authority™
800-570-3355

RB 289 202
with fresh cooling close to 0 °C
fully integrated
Niche width 56 cm,
Niche height 177.5 cm

Included in the price
2 ice packs
2 egg trays
1 wine and champagne rack
1 glass tray
1 ice cube tray
1 Gastronorm insert, stainless steel, GN 1/3 unperforated
1 Gastronorm lid, stainless steel, 1/3

Special accessories
GN 114 130
Gastronorm insert, stainless steel, GN 1/3
Unperforated, 40 mm deep, 1.5 l.
GN 114 230
Gastronorm insert, stainless steel, GN 2/3
Unperforated, 40 mm deep, 3 l.
GN 410 130
Gastronorm lid, stainless steel, GN 1/3
GN 410 230
Gastronorm lid, stainless steel, GN 2/3
RA 030 100
Storage container with transparent lid

Vario fridge-freezer combination 200 series
RB 289

- Unique usage concept:
  - Maximum usage of interior: stepped shelf, full depth shelves as well as integrated fixtures for various containers
  - Easy access: fully extendable shelves and drawers
  - Optimal overview: intelligent lighting concept, use of glass and transparent materials
  - Efficient preparation, cooking and storage with Gaggenau appliances: integration of Gastronorm inserts
- Enlarged interior with 251 litre net volume through compressor relocation
- Four climate zones incl. fresh cooling close to 0 °C
- Cushioned door closing system allowing a soft and controlled door closure
- Energy efficiency class A++

Handling
Electronic temperature control with temperature display.
Touch keys.

Technical Features
Cushioned door closing system from 20° door opening angle, integrated in door hinge.
Open-door and malfunction alarm.

Cooling
Net volume 132 litres.
Fast cooling.
Automatic defrosting with defrost water evaporation.
Temperature adjustable from +2 °C to +8 °C.
3 safety glass shelves, 2 of which are fully extendable and 1 height adjustable.
Wine and champagne rack for 4 bottles, can be completely folded away.
Fixture for storing glass tray.
1 large door rack with aluminium profile for bottles with flexible bottle holder.
1 door rack with aluminium profile.
Bright interior lighting with integrated glare-free side light elements.
Stepped shelf in aluminium for optimum use of interior and for storing GN inserts.
Possible combinations:
1 x 1/3 GN
2 x 1/3 GN
3 x 1/3 GN
1 x 2/3 GN
1 x 2/3 GN and 1 x 1/3 GN

Fresh cooling close to 0 °C
Net volume 57 litres.
Dynamic cold air distribution.
Automatic defrosting with defrost water evaporation.
Antimicrobial activated charcoal air filter.
1 humidity drawer for vegetables with 25 litres net volume.
1 fresh cooling drawer with 32 litres net volume.

Freezing
Net volume 62 litres.
No-frost technology with fast freezing.
Dynamic cold air distribution.
Temperature adjustable from -16 °C to -24 °C.
4-star freezer compartment.
Freezing capacity 12 kg/24 h.
Storage time after a malfunction 16 h.
2 freezer drawers, 1 of which extra large.

Consumption data
Energy consumption 250 kwh/year.
Noise level 39 dB (re 1 pW).

Planning notes
Flat hinge.
Door hinge right, reversible.
Door opening angle of 115°, fixable at 90°.
Appliance plinth recess 90 mm.
Max. door panel weight:
Upper door 22 kg.
Lower door 22 kg.
Necessary gap between furniture door panels 4 mm.

Connection
Total connected load 0.12 kW.
Connecting cable 2.3 m with plug.

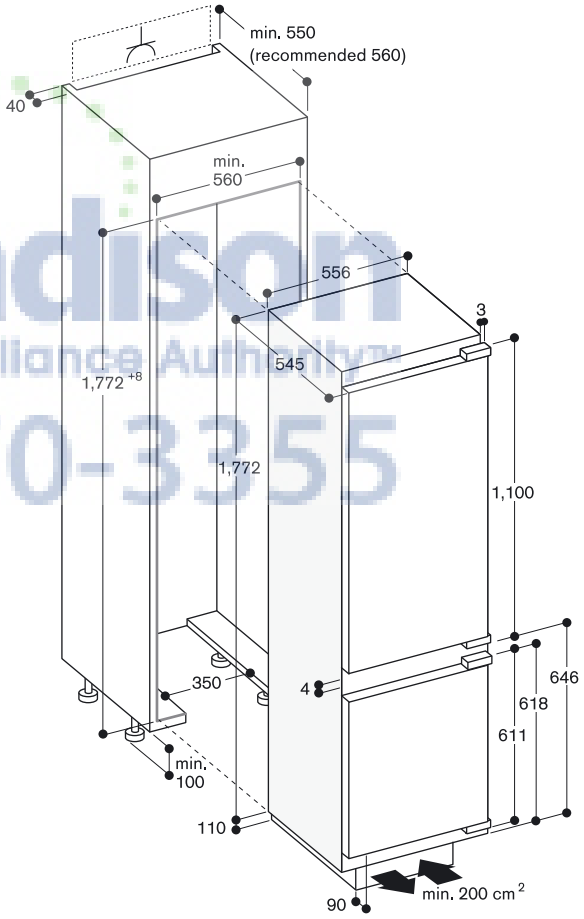

AiMadison
Your Appliance Authority
800-570-3355

RB 287 202
fully integrated
Niche width 56 cm,
Niche height 177.5 cm

Included in the price
2 ice packs
2 egg trays
1 wine and champagne rack
1 glass tray
1 ice cube tray
1 Gastronorm insert, stainless steel, GN 1/3 unperforated
1 Gastronorm lid, stainless steel, 1/3

Special accessories
GN 114 130
Gastronorm insert, stainless steel, GN 1/3
Unperforated, 40 mm deep, 1.5 l.
GN 114 230
Gastronorm insert, stainless steel, GN 2/3
Unperforated, 40 mm deep, 3 l.
GN 410 130
Gastronorm lid, stainless steel, GN 1/3
GN 410 230
Gastronorm lid, stainless steel, GN 2/3
RA 030 100
Storage container with transparent lid

Vario fridge-freezer combination 200 series
RB 287

- Unique usage concept:
  - Maximum usage of interior: stepped shelf, full depth shelves as well as integrated fixtures for various containers
  - Easy access: fully extendable shelves and drawers
  - Optimal overview: intelligent lighting concept, use of glass and transparent materials
  - Efficient preparation, cooking and storage with Gaggenau appliances: integration of Gastronorm inserts
- Enlarged interior with 264 litre net volume through compressor relocation
- Cushioned door closing system allowing a soft and controlled door closure
- Energy efficiency class A++

Handling
Electronic temperature control with temperature display.
Touch keys.

Technical Features
Dynamic cold air distribution.
Cushioned door closing system from 20° door opening angle, integrated in door hinge.
Open-door and malfunction alarm.

Cooling
Net volume 189 litres.
Fast cooling.
Automatic defrosting with defrost water evaporation.
Temperature adjustable from +2 °C to +8 °C.
3 safety glass shelves, 2 of which are height adjustable and 1 fully extendable.
Wine and champagne rack for 4 bottles, can be completely folded away.
Fixture for storing glass tray.
1 large door rack with aluminium profile for bottles with flexible bottle holder.
2 door racks with aluminium profile.
1 vegetable drawer.
Bright interior lighting with integrated glare-free side light elements.
Stepped shelf in aluminium for optimum use of interior and for storing GN inserts.
Possible combinations:
1 x 1/3 GN
2 x 1/3 GN
3 x 1/3 GN
1 x 2/3 GN
1 x 2/3 GN and 1 x 1/3 GN

Freezing
Net volume 75 litres.
No-frost technology with fast freezing.
Temperature adjustable from -16 °C to -24 °C.
4-star freezer compartment.
Freezing capacity 15 kg/24 h.
Storage time after a malfunction 16 h.
3 freezer drawers, 1 of which extra large.

Consumption data
Energy consumption 240 kwh/year.
Noise level 39 dB (re 1 pW).

Planning notes
Flat hinge.
Door hinge right, reversible.
Door opening angle of 115°, fixable at 90°.
Appliance plinth recess 90 mm.
Max. door panel weight:
Upper door 22 kg.
Lower door 22 kg.
Necessary gap between furniture door panels 4 mm.

Connection
Total connected load 0.12 kW.
Connecting cable 2.3 m with plug.

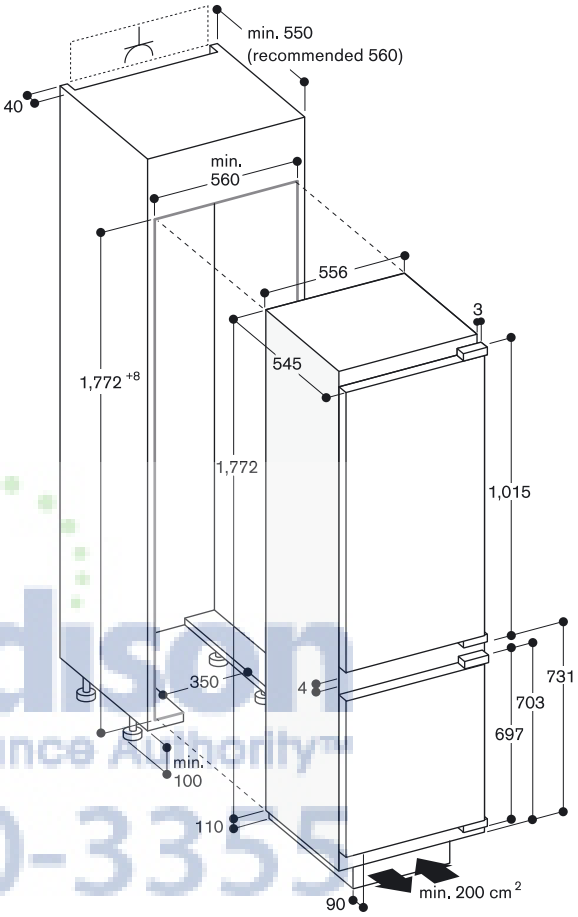

AMadison
Your Appliance Authority™
800-570-3355

RT 289 202
with fresh cooling close to 0 °C
fully integrated
Niche width 56 cm,
Niche height 177.5 cm

Included in the price
2 egg trays
1 wine and champagne rack
1 glass tray
1 ice cube tray
1 Gastronorm insert, stainless steel, GN 1/3 unperforated
1 Gastronorm lid, stainless steel, 1/3

Special accessories
GN 114 130
Gastronorm insert, stainless steel, GN 1/3
Unperforated, 40 mm deep, 1.5 l.
GN 114 230
Gastronorm insert, stainless steel, GN 2/3
Unperforated, 40 mm deep, 3 l.
GN 410 130
Gastronorm lid, stainless steel, GN 1/3
GN 410 230
Gastronorm lid, stainless steel, GN 2/3
RA 030 100
Storage container with transparent lid

Vario fridge-freezer combination 200 series
RT 289

- Unique usage concept:
  - Maximum usage of interior: stepped shelf, full depth shelves as well as integrated fixtures for various containers
  - Easy access: fully extendable shelves and drawers
  - Optimal overview: intelligent lighting concept, use of glass and transparent materials
  - Efficient preparation, cooking and storage with Gaggenau appliances: integration of Gastronorm inserts
- Enlarged interior with 289 litre net volume through compressor relocation
- Four climate zones incl. fresh cooling close to 0 °C
- Cushioned door closing system allowing a soft and controlled door closure
- Energy efficiency class A++

Handling
Electronic temperature control with temperature display.
Touch keys.

Technical Features
Cushioned door closing system from 20° door opening angle, integrated in door hinge.
Open-door and malfunction alarm.

Freezing
Net volume 28 litres.
Fast freezing.
Storage temperature from -18 °C and lower.
4-star freezer compartment.
Freezing capacity 2 kg/24 h.
Storage time after a malfunction 14 h.
2 shelves, 1 of which removable, in safety glass.

Cooling
Net volume 183 litres.
Automatic defrosting with defrost water evaporation.
Temperature adjustable from +2 °C to +8 °C.
1 full depth safety glass shelf, fully extendable.
3 safety glass shelves, 2 of which are fully extendable and 1 height adjustable.
Wine and champagne rack for 4 bottles, can be completely folded away.
Fixture for storing glass tray.
1 large door rack with aluminium profile for bottles with flexible bottle holder.
3 door racks with aluminium profile.
Bright interior lighting with integrated glare-free side light elements.
Stepped shelf in aluminium for optimum use of interior and for storing GN inserts.
Possible combinations:
1 x 1/3 GN
2 x 1/3 GN
3 x 1/3 GN
1 x 2/3 GN
1 x 2/3 GN and 1 x 1/3 GN

Fresh cooling close to 0 °C
Net volume 78 litres.
Dynamic cold air distribution.
Automatic defrosting with defrost water evaporation.
Antimicrobial activated charcoal air filter.
1 humidity drawer for vegetables with 25 litres net volume.
2 fresh cooling drawers with 53 litres net volume in total.

Consumption data
Energy consumption 231 kwh/year.
Noise level 39 dB (re 1 pW).

Planning notes
Flat hinge.
Door hinge right, reversible.
Door opening angle of 115°, fixable at 90°.
Appliance plinth recess 90 mm.
Max. door panel weight 22 kg.

Connection
Total connected load 0.12 kW.
Connecting cable 2.3 m with plug.

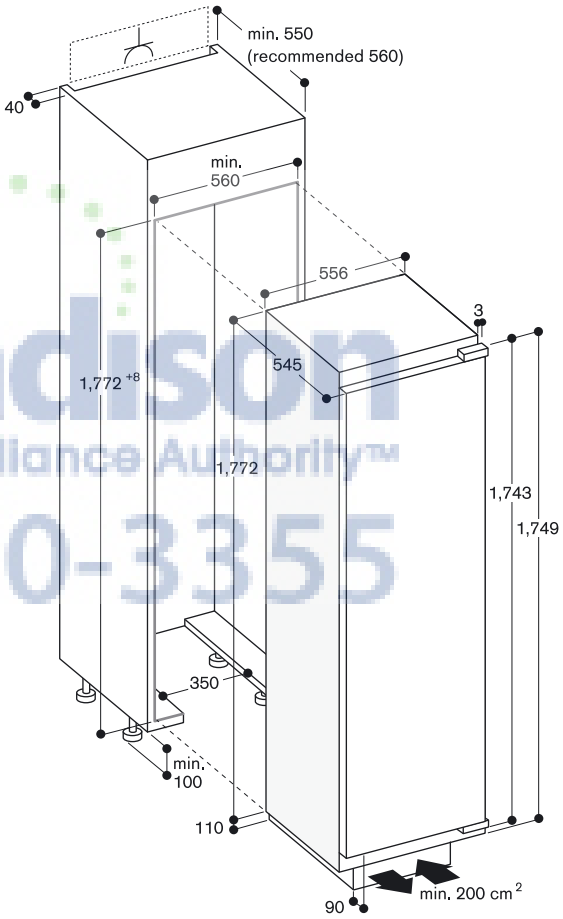

AMadison
Your Appliance Authority™
800-570-3355

RT 287 202
with cellar compartment
fully integrated
Niche width 56 cm,
Niche height 177.5 cm

Included in the price
2 egg trays
1 wine and champagne rack
1 glass tray
1 ice cube tray
1 Gastronorm insert, stainless steel, GN 1/3 unperforated
1 Gastronorm lid, stainless steel, 1/3

Special accessories
GN 114 130
Gastronorm insert, stainless steel, GN 1/3
Unperforated, 40 mm deep, 1.5 l.
GN 114 230
Gastronorm insert, stainless steel, GN 2/3
Unperforated, 40 mm deep, 3 l.
GN 410 130
Gastronorm lid, stainless steel, GN 1/3
GN 410 230
Gastronorm lid, stainless steel, GN 2/3
RA 030 100
Storage container with transparent lid

Vario fridge-freezer combination 200 series
RT 287

- Unique usage concept:
  - Maximum usage of interior: stepped shelf, full depth shelves as well as integrated fixtures for various containers
  - Easy access: fully extendable shelves and drawers
  - Optimal overview: intelligent lighting concept, use of glass and transparent materials
  - Efficient preparation, cooking and storage with Gaggenau appliances: integration of Gastronorm inserts
- Enlarged interior with 302 litre net volume through compressor relocation
- Three climate zones incl. cellar compartment
- Cushioned door closing system allowing a soft and controlled door closure
- Energy efficiency class A++

Handling
Electronic temperature control with temperature display.
Touch keys.

Technical Features
Cushioned door closing system from 20° door opening angle, integrated in door hinge.
Open-door and malfunction alarm.

Freezing
Net volume 28 litres.
Fast freezing.
Storage temperature from -18 °C and lower.
4-star freezer compartment.
Freezing capacity 2 kg/24 h.
Storage time after a malfunction 14 h.
2 shelves, 1 of which removable, in safety glass.

Cooling
Net volume 169 litres.
Automatic defrosting with defrost water evaporation.
Temperature adjustable from +2 °C to +8 °C.
2 safety glass shelves, 1 of which fully extendable and 1 height adjustable.
Wine and champagne rack for 4 bottles, can be completely folded away.
Fixture for storing glass tray.
1 large door rack with aluminium profile for bottles with flexible bottle holder.
3 door racks with aluminium profile.
1 vegetable drawer.
2 small containers with transparent lid.
Bright interior lighting with integrated glare-free side light elements.
Stepped shelf in aluminium for optimum use of interior and for storing GN inserts.
Possible combinations:
1 x 1/3 GN
2 x 1/3 GN
3 x 1/3 GN
1 x 2/3 GN
1 x 2/3 GN and 1 x 1/3 GN

Cellar compartment
Net volume 105 litres.
Automatic defrosting with defrost water evaporation.
Temperature adjustable from +6 °C to +14 °C.
1 wide drawer.
2 tall drawers, also for upright storage of bottles, removable.

Consumption data
Energy consumption 209 kwh/year.
Noise level 39 dB (re 1 pW).

Planning notes
Flat hinge.
Door hinge right, reversible.
Door opening angle of 115°, fixable at 90°.
Appliance plinth recess 90 mm.
Max. door panel weight:
Door 22 kg.
Drawer 10 kg.
Necessary gap between furniture door panels 4 mm.

Connection
Total connected load 0.12 kW.
Connecting cable 2.3 m with plug.

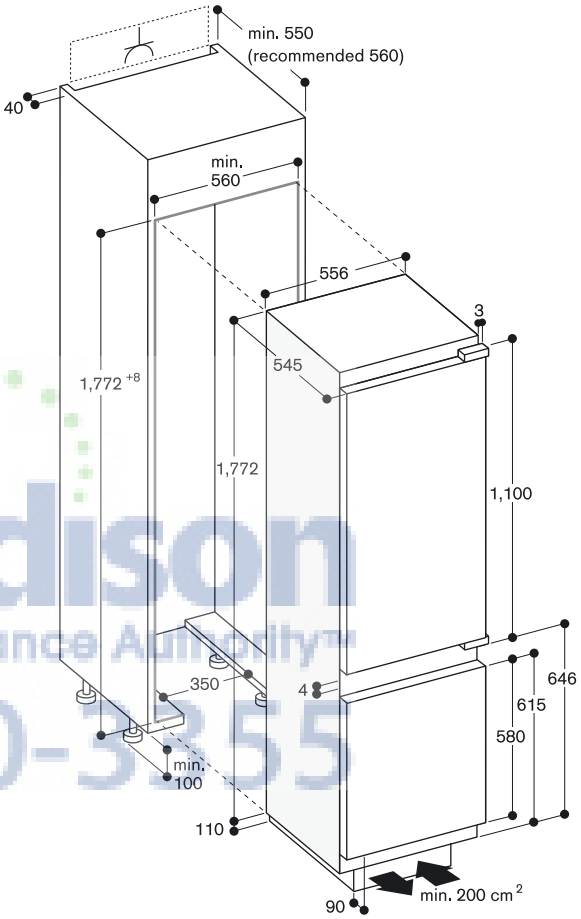

AJMadison
Your Appliance Authority
800-570-3355

RC 289 202
with fresh cooling close to 0 °C
fully integrated
Niche width 56 cm,
Niche height 177.5 cm

Included in the price
2 egg trays
1 wine and champagne rack
1 glass tray
1 Gastronorm insert, stainless steel, GN 1/3 unperforated
1 Gastronorm lid, stainless steel, 1/3

Special accessories
GN 114 130
Gastronorm insert, stainless steel, GN 1/3
Unperforated, 40 mm deep, 1.5 l.
GN 114 230
Gastronorm insert, stainless steel, GN 2/3
Unperforated, 40 mm deep, 3 l.
GN 410 130
Gastronorm lid, stainless steel, GN 1/3
GN 410 230
Gastronorm lid, stainless steel, GN 2/3
RA 030 100
Storage container with transparent lid

product design award 2011
Designpreis Deutschland 2011 NOMINIERT
Design Innovationen Essen Germany Roter Punkt

Vario refrigerator 200 series
RC 289

- Unique usage concept:
  - Maximum usage of interior: stepped shelf, full depth shelves as well as integrated fixtures for various containers
  - Easy access: fully extendable shelves and drawers
  - Optimal overview: intelligent lighting concept, use of glass and transparent materials
  - Efficient preparation, cooking and storage with Gaggenau appliances: integration of Gastronorm inserts
- Enlarged interior with 306 litre net volume through compressor relocation
- Three climate zones incl. fresh cooling close to 0 °C
- Combines with freezer RF 287 (Side-by-Side-Integration)
- Cushioned door closing system allowing a soft and controlled door closure
- Energy efficiency class A++

Handling
Electronic temperature control with temperature display.
Touch keys.

Technical Features
Dynamic cold air distribution.
Cushioned door closing system from 20° door opening angle, integrated in door hinge.
Open-door alarm.

Cooling
Net volume 228 litres.
Fast cooling.
Automatic defrosting with defrost water evaporation.
Temperature adjustable from +2 °C to +8 °C.
2 full depth safety glass shelves, fully extendable.
4 safety glass shelves, 2 of which are fully extendable and 2 height adjustable.
Wine and champagne rack for 4 bottles, can be completely folded away.
Fixture for storing glass tray.
1 large door rack with aluminium profile for bottles with flexible bottle holder.
2 door racks with aluminium profile.
Bright interior lighting with integrated glare-free side light elements.
Stepped shelf in aluminium for optimum use of interior and for storing GN inserts.
Possible combinations:
1 x 1/3 GN
2 x 1/3 GN
3 x 1/3 GN
1 x 2/3 GN
1 x 2/3 GN and 1 x 1/3 GN

Fresh cooling close to 0 °C
Net volume 78 litres.
Automatic defrosting with defrost water evaporation.
Antimicrobial activated charcoal air filter.
1 humidity drawer for vegetables with 25 litres net volume.
2 fresh cooling drawers with 53 litres net volume in total.

Consumption data
Energy consumption 133 kwh/year.
Noise level 39 dB (re 1 pW).

Planning notes
Flat hinge.
Door hinge right, reversible.
Door opening angle of 115°, fixable at 90°.
Appliance plinth recess 90 mm.
Max. door panel weight 22 kg.

Connection
Total connected load 0.12 kW.
Connecting cable 2.3 m with plug.

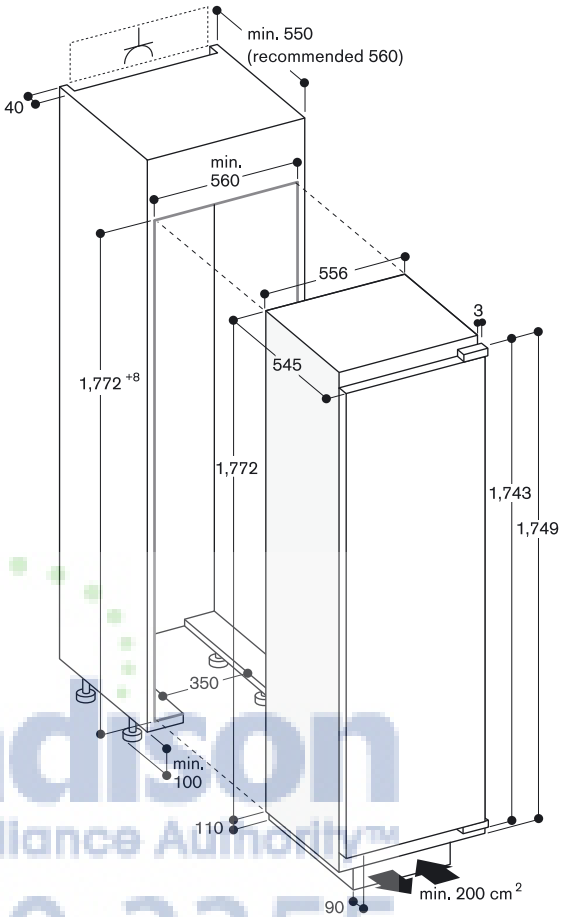

AJ Madison
Your Appliance Authority™
800-570-3355

RF 287 202
fully integrated
Niche width 56 cm,
Niche height 177.5 cm

Included in the price
2 ice packs
1 ice cube tray

Vario freezer 200 series
RF 287

- Enlarged interior with 213 litre net volume through compressor relocation
- Flexible interior configuration: all drawers and safety glass shelves can be removed
- Combines with fridge RC 289 (Side-by-Side-Integration)
- Cushioned door closing system allowing a soft and controlled door closure
- Energy efficiency class A++

Handling
Electronic temperature control with temperature display.
Touch keys.

Technical Features
Dynamic cold air distribution.
Cushioned door closing system from 20° door opening angle, integrated in door hinge.
Open-door and malfunction alarm.

Features
No-frost technology with fast freezing.
Temperature adjustable from -16 °C to -24 °C.
4-star freezer compartment.
Freezing capacity 25 kg/24 h.
Storage time after a malfunction 11 h.
5 freezer drawers, 1 of which extra large.
4 safety glass shelves between the freezer drawers.
2 safety glass shelves with transparent front.
All freezer drawers and safety glass shelves can be removed.

Consumption data
Energy consumption 244 kwh/year.
Noise level 40 dB (re 1 pW).

Planning notes
Flat hinge.
Door hinge left, reversible.
Door opening angle of 115°, fixable at 90°.
Appliance plinth recess 90 mm.
Max. door panel weight 30 kg.

Connection
Total connected load 0.12 kW.
Connecting cable 2.3 m with plug.

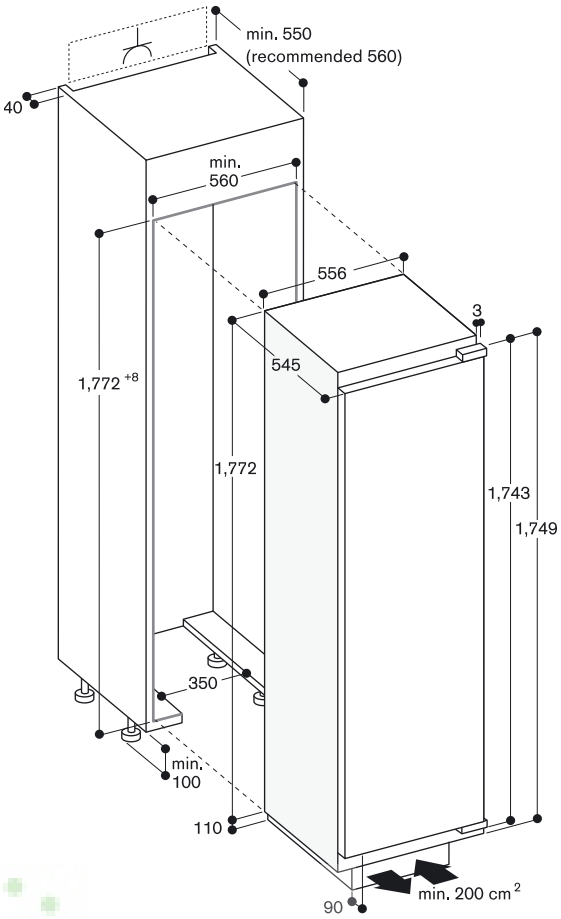

AJMadison
Your Appliance Authority™
800-570-3355

RT 249 202
with fresh cooling close to 0 °C
fully integrated
Niche width 56 cm,
Niche height 140 cm

Included in the price
2 egg trays
1 wine and champagne rack
1 glass tray
1 ice cube tray
1 Gastronorm insert, stainless steel, GN 1/3 unperforated
1 Gastronorm lid, stainless steel, 1/3

Special accessories
GN 114 130
Gastronorm insert, stainless steel, GN 1/3
Unperforated, 40 mm deep, 1.5 l.
GN 114 230
Gastronorm insert, stainless steel, GN 2/3
Unperforated, 40 mm deep, 3 l.
GN 410 130
Gastronorm lid, stainless steel, GN 1/3
GN 410 230
Gastronorm lid, stainless steel, GN 2/3
RA 030 100
Storage container with transparent lid

Vario fridge-freezer combination 200 series
RT 249

- Unique usage concept:
  - Maximum usage of interior: stepped shelf, full depth shelves as well as integrated fixtures for various containers
  - Easy access: fully extendable shelves and drawers
  - Optimal overview: intelligent lighting concept, use of glass and transparent materials
  - Efficient preparation, cooking and storage with Gaggenau appliances: integration of Gastronorm inserts
- Enlarged interior with 214 litre net volume through compressor relocation
- Four climate zones incl. fresh cooling close to 0 °C
- Cushioned door closing system allowing a soft and controlled door closure
- Energy efficiency class A++

Handling
Electronic temperature control with temperature display.
Touch keys.

Technical Features
Cushioned door closing system from 20° door opening angle, integrated in door hinge.
Open-door and malfunction alarm.

Freezing
Net volume 28 litres.
Fast freezing.
Storage temperature from -18 °C and lower.
4-star freezer compartment.
Freezing capacity 2 kg/24 h.
Storage time after a malfunction 14 h.
2 shelves, 1 of which removable, in safety glass.

Cooling
Net volume 129 litres.
Automatic defrosting with defrost water evaporation.
Temperature adjustable from +2 °C to +8 °C.
3 safety glass shelves, 2 of which are fully extendable and 1 height adjustable.
Wine and champagne rack for 4 bottles, can be completely folded away.
Fixture for storing glass tray.
1 large door rack with aluminium profile for bottles with flexible bottle holder.
3 door racks with aluminium profile.
Bright interior lighting with integrated glare-free side light elements.
Stepped shelf in aluminium for optimum use of interior and for storing GN inserts.
Possible combinations:
1 x 1/3 GN
2 x 1/3 GN
3 x 1/3 GN
1 x 2/3 GN
1 x 2/3 GN and 1 x 1/3 GN

Fresh cooling close to 0 °C
Net volume 57 litres.
Dynamic cold air distribution.
Automatic defrosting with defrost water evaporation.
Antimicrobial activated charcoal air filter.
1 humidity drawer for vegetables with 25 litres net volume.
1 fresh cooling drawer with 32 litres net volume.

Consumption data
Energy consumption 204 kwh/year.
Noise level 39 dB (re 1 pW).

Planning notes
Flat hinge.
Door hinge right, reversible.
Door opening angle of 115°, fixable at 90°.
Appliance plinth recess 90 mm.
Max. door panel weight 22 kg.

Connection
Total connected load 0.12 kW.
Connecting cable 2.3 m with plug.

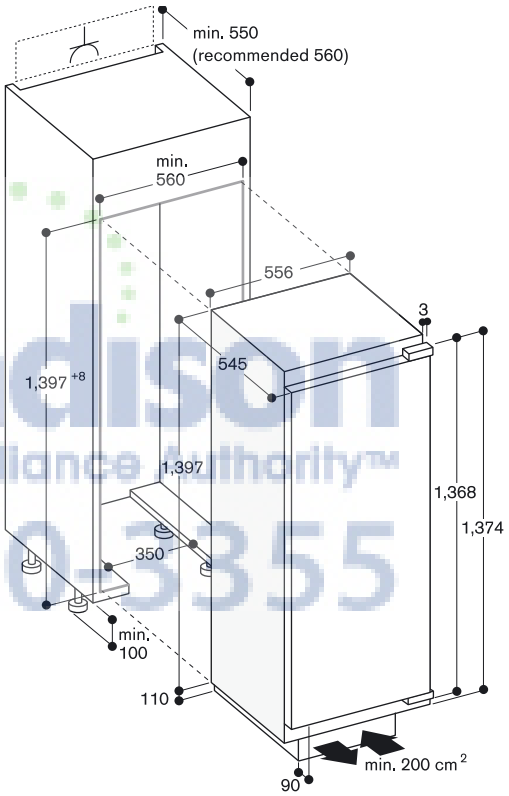

AJMadison
Your Appliance Authority™
800-570-3355

RC 249 202
with fresh cooling close to 0 °C
fully integrated
Niche width 56 cm,
Niche height 140 cm

Included in the price
2 egg trays
1 wine and champagne rack
1 glass tray
1 Gastronorm insert, stainless steel, GN 1/3 unperforated
1 Gastronorm lid, stainless steel, 1/3

Special accessories
GN 114 130
Gastronorm insert, stainless steel, GN 1/3
Unperforated, 40 mm deep, 1.5 l.
GN 114 230
Gastronorm insert, stainless steel, GN 2/3
Unperforated, 40 mm deep, 3 l.
GN 410 130
Gastronorm lid, stainless steel, GN 1/3
GN 410 230
Gastronorm lid, stainless steel, GN 2/3
RA 030 100
Storage container with transparent lid

Vario refrigerator 200 series
RC 249

- Unique usage concept:
  - Maximum usage of interior: stepped shelf, full depth shelves as well as integrated fixtures for various containers
  - Easy access: fully extendable shelves and drawers
  - Optimal overview: intelligent lighting concept, use of glass and transparent materials
  - Efficient preparation, cooking and storage with Gaggenau appliances: integration of Gastronorm inserts
- Enlarged interior with 233 litre net volume through compressor relocation
- Three climate zones incl. fresh cooling close to 0 °C
- Combines with freezer RF 247 (Side-by-Side-Integration)
- Cushioned door closing system allowing a soft and controlled door closure
- Energy efficiency class A++

Handling
Electronic temperature control with temperature display.
Touch keys.

Technical Features
Dynamic cold air distribution.
Cushioned door closing system from 20° door opening angle, integrated in door hinge.
Open-door alarm.

Cooling
Net volume 176 litres.
Fast cooling.
Automatic defrosting with defrost water evaporation.
Temperature adjustable from +2 °C to +8 °C.
1 full depth safety glass shelf, fully extendable.
4 safety glass shelves, 2 of which are fully extendable and 2 height adjustable.
Wine and champagne rack for 4 bottles, can be completely folded away.
Fixture for storing glass tray.
1 large door rack with aluminium profile for bottles with flexible bottle holder.
2 door racks with aluminium profile.
Bright interior lighting with integrated glare-free side light elements.
Stepped shelf in aluminium for optimum use of interior and for storing GN inserts.
Possible combinations:
1 x 1/3 GN
2 x 1/3 GN
3 x 1/3 GN
1 x 2/3 GN
1 x 2/3 GN and 1 x 1/3 GN

Fresh cooling close to 0 °C
Net volume 57 litres.
Automatic defrosting with defrost water evaporation.
Antimicrobial activated charcoal air filter.
1 humidity drawer for vegetables with 25 litres net volume.
1 fresh cooling drawer with 32 litres net volume.

Consumption data
Energy consumption 125 kwh/year.
Noise level 39 dB (re 1 pW).

Planning notes
Flat hinge.
Door hinge right, reversible.
Door opening angle of 115°, fixable at 90°.
Appliance plinth recess 90 mm.
Max. door panel weight 22 kg.

Connection
Total connected load 0.12 kW.
Connecting cable 2.3 m with plug.

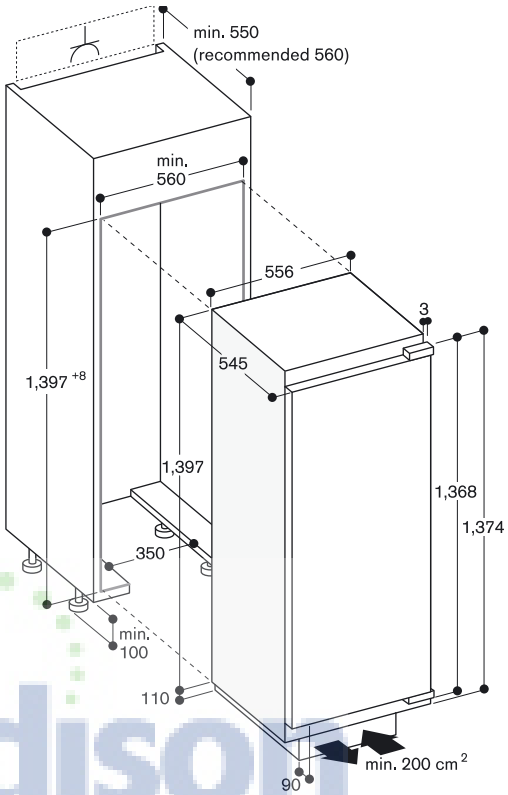

AjMadison
Your Appliance Authority™
800-570-3355

RC 247 202
fully integrated
Niche width 56 cm,
Niche height 140 cm

Included in the price
2 egg trays
1 wine and champagne rack
1 glass tray
1 Gastronorm insert, stainless steel, GN 1/3 unperforated
1 Gastronorm lid, stainless steel, 1/3

Special accessories
GN 114 130
Gastronorm insert, stainless steel, GN 1/3
Unperforated, 40 mm deep, 1.5 l.
GN 114 230
Gastronorm insert, stainless steel, GN 2/3
Unperforated, 40 mm deep, 3 l.
GN 410 130
Gastronorm lid, stainless steel, GN 1/3
GN 410 230
Gastronorm lid, stainless steel, GN 2/3
RA 030 100
Storage container with transparent lid

Vario refrigerator 200 series
RC 247

- Unique usage concept:
  - Maximum usage of interior: stepped shelf, full depth shelves as well as integrated fixtures for various containers
  - Easy access: fully extendable shelves and drawers
  - Optimal overview: intelligent lighting concept, use of glass and transparent materials
  - Efficient preparation, cooking and storage with Gaggenau appliances: integration of Gastronorm inserts
- Enlarged interior with 258 litre net volume through compressor relocation
- Combines with freezer RF 247 (Side-by-Side-Integration)
- Cushioned door closing system allowing a soft and controlled door closure
- Energy efficiency class A++

Handling
Electronic temperature control with temperature display.
Touch keys.

Technical Features
Dynamic cold air distribution.
Cushioned door closing system from 20° door opening angle, integrated in door hinge.
Open-door alarm.

Features
Fast cooling.
Automatic defrosting with defrost water evaporation.
Temperature adjustable from +2 °C to +8 °C.
4 safety glass shelves, 2 of which are fully extendable and 2 height adjustable.
Wine and champagne rack for 4 bottles, can be completely folded away.
Fixture for storing glass tray.
1 large door rack with aluminium profile for bottles with flexible bottle holder.
3 door racks with aluminium profile.
2 vegetable drawers.
Bright interior lighting with integrated glare-free side light elements.
Stepped shelf in aluminium for optimum use of interior and for storing GN inserts.
Possible combinations:
1 x 1/3 GN
2 x 1/3 GN
3 x 1/3 GN
1 x 2/3 GN
1 x 2/3 GN and 1 x 1/3 GN

Consumption data
Energy consumption 109 kwh/year.
Noise level 39 dB (re 1 pW).

Planning notes
Flat hinge.
Door hinge right, reversible.
Door opening angle of 115°, fixable at 90°.
Appliance plinth recess 90 mm.
Max. door panel weight 22 kg.

Connection
Total connected load 0.12 kW.
Connecting cable 2.3 m with plug.

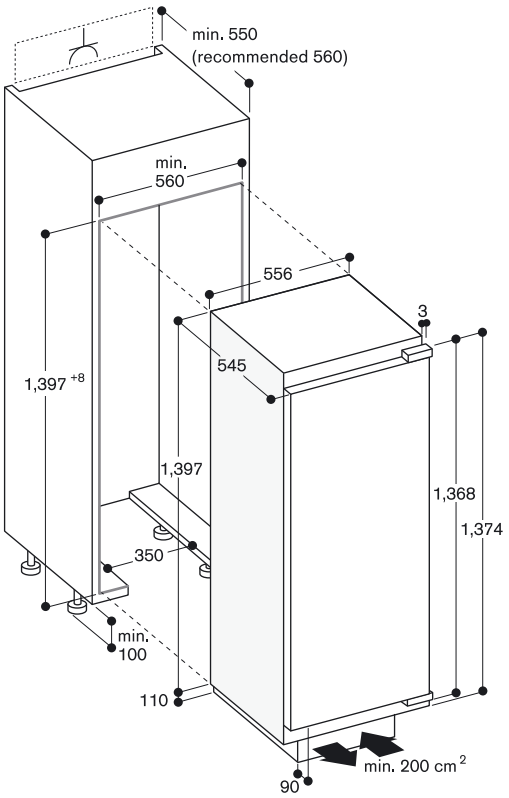

AjMadison
Your Appliance Authority™
800-570-3355

RF 247 202
fully integrated
Niche width 56 cm,
Niche height 140 cm

Included in the price
2 ice packs
1 ice cube tray

Vario freezer 200 series
RF 247

- Enlarged interior with 160 litre net volume through compressor relocation
- Flexible interior configuration: all drawers and safety glass shelves can be removed
- Combines with fridge RC 249/247 (Side-by-Side-Integration)
- Cushioned door closing system allowing a soft and controlled door closure
- Energy efficiency class A++

Handling
Electronic temperature control with temperature display.
Touch keys.

Technical Features
Dynamic cold air distribution.
Cushioned door closing system from 20° door opening angle, integrated in door hinge.
Open-door and malfunction alarm.

Features
No-frost technology with fast freezing.
Temperature adjustable from -16 °C to -24 °C.
4-star freezer compartment.
Freezing capacity 25 kg/24 h.
Storage time after a malfunction 11 h.
4 freezer drawers, 1 of which extra large.
3 safety glass shelves between the freezer drawers.
1 safety glass shelf with transparent front.
All freezer drawers and safety glass shelves can be removed.

Consumption data
Energy consumption 209 kwh/year.
Noise level 40 dB (re 1 pW).

Planning notes
Flat hinge.
Door hinge left, reversible.
Door opening angle of 115°, fixable at 90°.
Appliance plinth recess 90 mm.
Max. door panel weight 30 kg.

Connection
Total connected load 0.12 kW.
Connecting cable 2.3 m with plug.

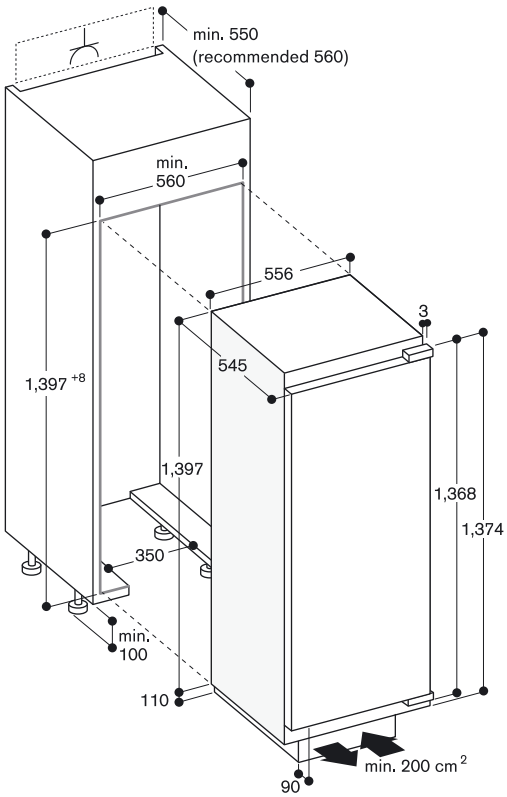

AJMadison
Your Appliance Authority™
800-570-3355

RB 282 203▾
with fresh cooling
fully integrated
Niche width 56 cm,
Niche height 177.5 cm

▾ Available 1. quarter 2013

Included in the price
2 ice packs
2 egg trays
1 wine and champagne rack
1 ice cube tray

Special accessories
RA 030 100
Storage container with transparent lid

Fridge-freezer combination
RB 282

- Three climate zones incl. fresh cooling
- Height adjustable safety glass shelves
- Door racks with aluminium profiles
- Innovative defrost technology:
  - Reduced energy consumption due to new evaporator design
  - Faster defrosting and easier cleaning due to less severe and more uniform ice build-up
  - Safety glass shelf between freezer drawers
- Net volume 272 litres
- Cushioned door closing system allowing a soft and controlled door closure
- Energy efficiency class A++

Handling
Electronic temperature control with digital display.
Touch keys.

Technical Features
Cushioned door closing system from 20° door opening angle, integrated in door hinge.
Energy-saving vacation mode.
Open-door and malfunction alarm.

Cooling
Net volume 190 litres.
Fast cooling.
Automatic defrosting with defrost water evaporation.
Temperature adjustable from +2 °C to +8 °C.
5 safety glass shelves, 1 of which is fully extendable and 4 height adjustable.
Wine and champagne rack for 4 bottles, can be completely folded.
1 large door rack with aluminium profile for bottles with flexible bottle holder.
4 door racks with aluminium profile.
Bright interior lighting.

Fresh cooling
1 full width humidity drawer for vegetables with 21 litres net volume, manually controllable.

Freezing
Net volume 61 litres.
Fast freezing.
Temperature adjustable from -16 °C to -24 °C.
4-star freezer compartment.
Defrost assistance.
Freezing capacity 7 kg/24 h.
Storage time after a malfunction 26 h.
2 freezer drawers, 1 of which extra large.
1 safety glass shelf.

Consumption data
Energy consumption 226 kwh/year.
Noise level 35 dB (re 1 pW).

Planning notes
Flat hinge.
Door hinge right, reversible.
Door opening angle of 115°, fixable at 90°.
Max. door panel weight:
Upper door 14 kg.
Lower door 19 kg.

Connection
Total connected load 0.09 kW.
Connecting cable 2.3 m with plug.

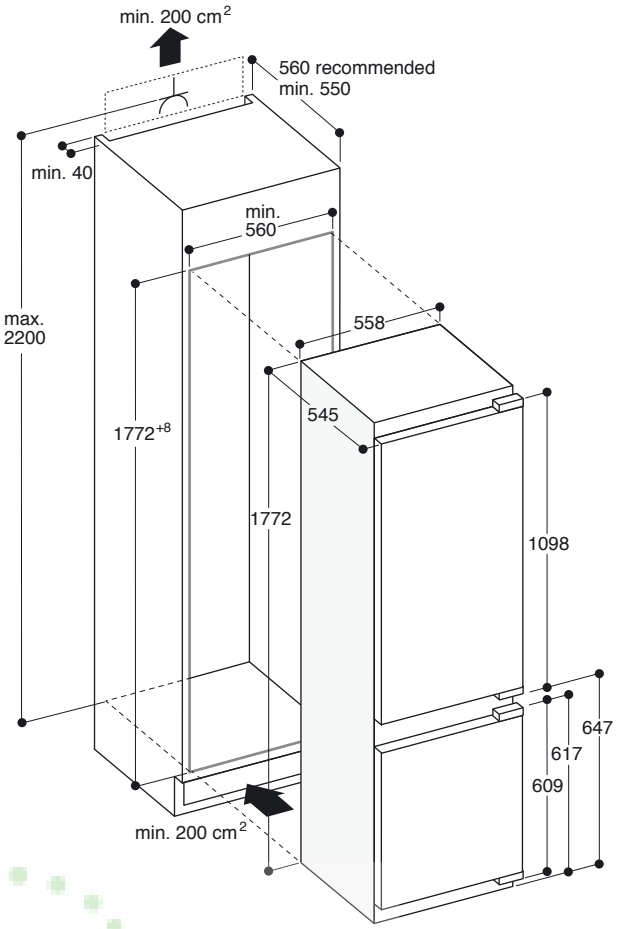

Madison
Best Appliance Authority™
800-570-3355

RC 282 203▼
with fresh cooling
fully integrated
Niche width 56 cm,
Niche height 177.5 cm

▼ Available 2. quarter 2013

Included in the price
2 egg trays
1 wine and champagne rack

Special accessories
RA 030 100
Storage container with transparent lid

Refrigerator
RC 282

- Height adjustable safety glass shelves
- Door racks with aluminium profiles
- Net volume 319 litres
- Cushioned door closing system allowing a soft and controlled door closure
- Energy efficiency class A++

Handling
Electronic temperature control with digital display.
Touch keys.

Technical Features
Dynamic cold air distribution.
Cushioned door closing system from 20° door opening angle, integrated in door hinge.
Open-door and malfunction alarm.
Antimicrobial activated charcoal air filter.

Cooling
Net volume 291 litres.
Fast cooling.
Automatic defrosting with defrost water evaporation.
Temperature adjustable from +2 °C to +8 °C.
7 safety glass shelves, of which 2 are fully extendable and 6 height adjustable.
Wine and champagne rack for 4 bottles, can be completely folded.
2 large door racks with aluminium profile for bottles with flexible bottle holder.
4 door racks with aluminium profile.
1 vegetable drawer.
Bright interior lighting with integrated glare-free side light elements.

Fresh cooling
1 full width humidity drawer for vegetables with 28 litres net volume, manually controllable.

Consumption data
Energy consumption 116 kwh/year.
Noise level 37 dB (re 1 pW).

Planning notes
Flat hinge.
Door hinge right, reversible.
Door opening angle of 115°, fixable at 90°.
Max. door panel weight 16 kg.

Connection
Total connected load 0.09 kW.
Connecting cable 2.3 m with plug.

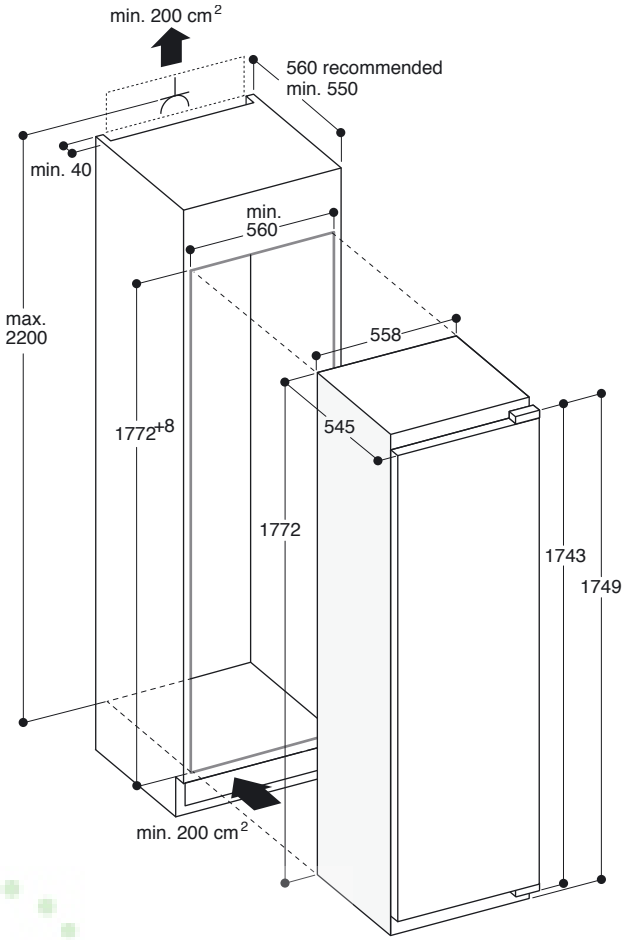

AJMadison
Your Appliance Authority™
800-570-3355

RT 242 202
with fresh cooling close to 0 °C
fully integrated
Niche width 56 cm,
Niche height 140 cm

Included in the price
2 egg trays
1 wine and champagne rack
1 glass tray
1 ice cube tray
1 storage container with lid

Special accessories
RA 030 100
Storage container with transparent lid

Fridge-freezer combination
RT 242

- Four climate zones incl. fresh cooling close to 0 °C
- Height adjustable safety glass shelves
- Door racks with aluminium profiles
- Net volume 211 litres
- Cushioned door closing system allowing a soft and controlled door closure
- Energy efficiency class A++

Handling
Electronic temperature control with digital display.

Technical Features
Dynamic cold air distribution.
Cushioned door closing system from 20° door opening angle, integrated in door hinge.

Freezing
Net volume 17 litres.
Fast freezing.
Storage temperature -18 °C and lower.
4-star freezer compartment.
Freezing capacity 2 kg/24 h.
Storage time after a malfunction 12 h.

Cooling
Net volume 134 litres.
Automatic defrosting with defrost water evaporation.
Temperature adjustable from +3 °C to +8 °C.
3 safety glass shelves, height adjustable.
1 large door rack for bottles.
4 door racks.
Bright interior light.

Fresh cooling close to 0 °C
Net volume 60 litres.
Automatic defrosting with defrost water evaporation.
1 humidity drawer for vegetables with 15 litres net volume.
2 fresh cooling drawers with 45 litres net volume in total.

Consumption data
Energy consumption 199 kwh/year.
Noise level 36 dB (re 1 pW).

Planning notes
Flat hinge.
Door hinge right, reversible.
Door opening angle of 115°, fixable at 90°.
Max. door panel weight 14 kg.

Connection
Total connected load 0.09 kW.
Connecting cable 2.3 m with plug.

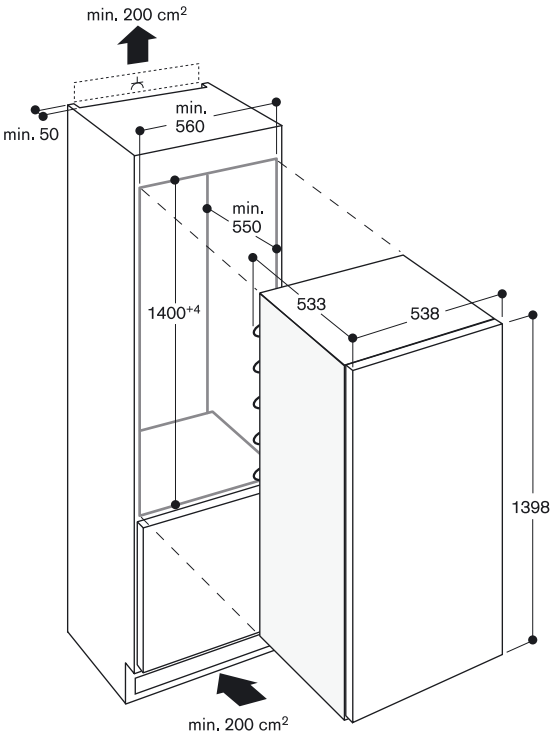

AJMadison
Your Appliance Authority™
800-570-3355

RC 242 202
with fresh cooling close to 0 °C
fully integrated
Niche width 56 cm,
Niche height 140 cm

Included in the price
2 egg trays
1 wine and champagne rack
1 glass tray
1 storage container with lid

Special accessories
RA 030 100
Storage container with transparent lid

Refrigerator
RC 242

- Three climate zones incl. fresh cooling close to 0 °C
- Height adjustable safety glass shelves
- Door racks with aluminium profiles
- Net volume 230 litres
- Cushioned door closing system allowing a soft and controlled door closure
- Energy efficiency class A+

Handling
Electronic temperature control with digital display.

Technical Features
Dynamic cold air distribution.
Cushioned door closing system from 20° door opening angle, integrated in door hinge.

Cooling
Net volume 170 litres.
Automatic defrosting with defrost water evaporation.
Temperature adjustable from +3 °C to +8 °C.
4 safety glass shelves, height adjustable.
1 integrated shelf.
1 large door rack for bottles.
4 door racks.
Bright interior light.

Fresh cooling close to 0 °C
Net volume 60 litres.
Automatic defrosting with defrost water evaporation.
1 humidity drawer for vegetables with 15 litres net volume.
2 fresh cooling drawers with 45 litres net volume in total.

Consumption data
Energy consumption 163 kwh/year.
Noise level 37 dB (re 1 pW).

Planning notes
Flat hinge.
Door hinge right, reversible.
Door opening angle of 115°, fixable at 90°.
Max. door panel weight 14 kg.

Connection
Total connected load 0.09 kW.
Connecting cable 2.3 m with plug.

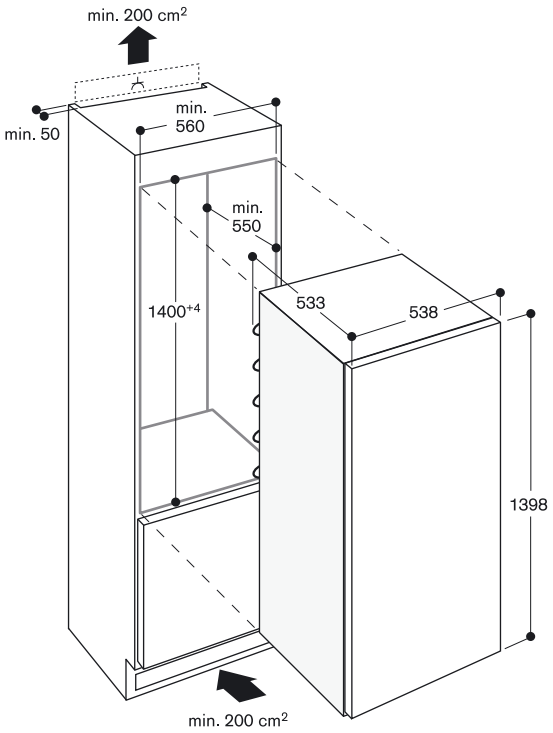

AllMadison
Appliance Authority™
800-570-3355

RT 220 202
fully integrated
Niche width 56 cm,
Niche height 122.5 cm

Included in the price
2 egg trays
1 wine and champagne rack
1 glass tray
1 ice cube tray

Special accessories
RA 030 100
Storage container with transparent lid

Fridge-freezer combination
RT 220

- Height adjustable safety glass shelves
- Door racks with aluminium profiles
- Net volume 206 litres
- Cushioned door closing system allowing a soft and controlled door closure
- Energy efficiency class A++

Handling
Electronic temperature control with digital display.

Technical Features
Dynamic cold air distribution.
Cushioned door closing system from 20° door opening angle, integrated in door hinge.

Freezing
Net volume 17 litres.
Fast freezing.
Storage temperature -18 °C and lower.
4-star freezer compartment.
Freezing capacity 2 kg/24 h.
Storage time after a malfunction 10 h.

Cooling
Net volume 189 litres.
Automatic defrosting with defrost water evaporation.
Temperature adjustable from +3 °C to +8 °C.
5 safety glass shelves, 4 of which are height adjustable.
1 vegetable drawer.
2 large door racks for bottles.
3 door racks.
Bright interior light.

Consumption data
Energy consumption 176 kwh/year.
Noise level 37 dB (re 1 pW).

Planning notes
Flat hinge.
Door hinge right, reversible.
Door opening angle of 115°, fixable at 90°.
Max. door panel weight 14 kg.

Connection
Total connected load 0.09 kW.
Connecting cable 2.3 m with plug.

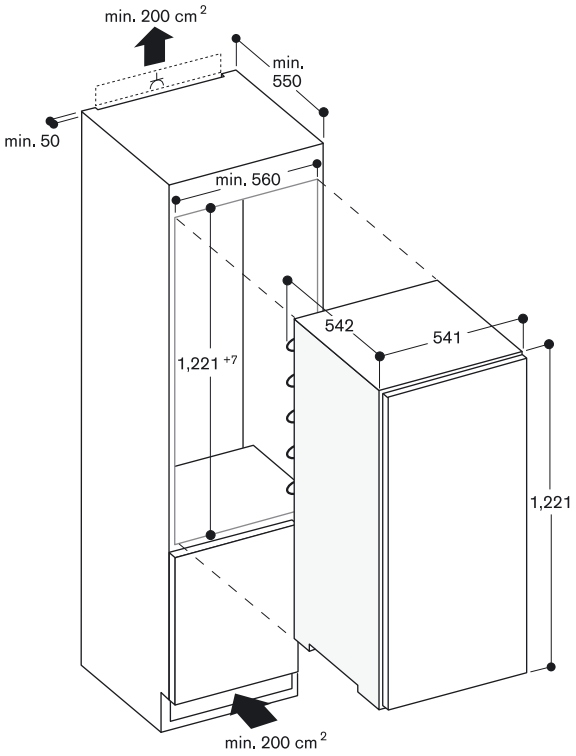

AJMadison
Your Appliance Authority™
800-570-3355

RC 220 202
fully integrated
Niche width 56 cm,
Niche height 122.5 cm

Included in the price
2 egg trays
1 wine and champagne rack
1 glass tray

Special accessories
RA 030 100
Storage container with transparent lid

Refrigerator
RC 220

- Height adjustable safety glass shelves
- Door racks with aluminium profiles
- Net volume 226 litres
- Cushioned door closing system allowing a soft and controlled door closure
- Energy efficiency class A+

Handling
Electronic temperature control with digital display.

Technical Features
Dynamic cold air distribution.
Cushioned door closing system from 20° door opening angle, integrated in door hinge.

Features
Automatic defrosting with defrost water evaporation.
Temperature adjustable from +3 °C to +8 °C.
6 safety glass shelves, 5 of which are height adjustable.
1 vegetable drawer.
2 large door racks for bottles.
3 door racks.
Bright interior light.

Consumption data
Energy consumption 138 kwh/year.
Noise level 34 dB (re 1 pW).

Planning notes
Flat hinge.
Door hinge right, reversible.
Door opening angle of 115°, fixable at 90°.
Max. door panel weight 14 kg.

Connection
Total connected load 0.09 kW.
Connecting cable 2.3 m with plug.

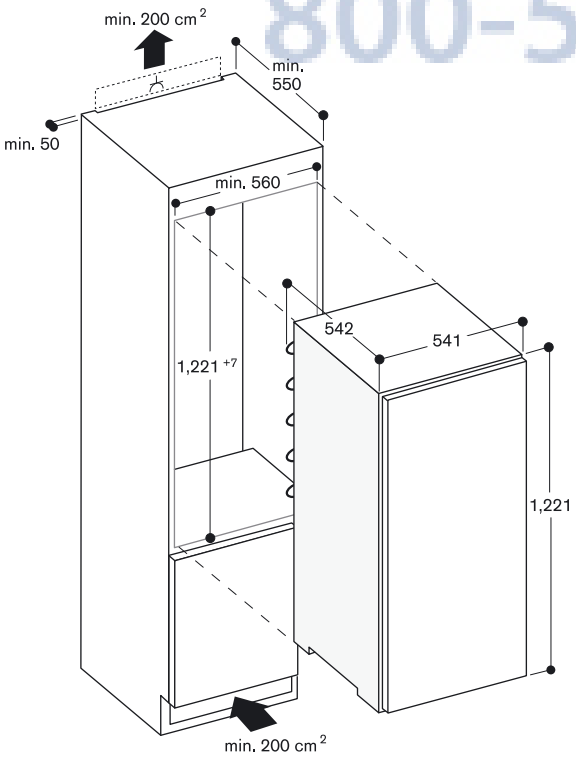

RT 200 202
fully integrated, under-counter
Niche width 60 cm, Niche height 82 cm

Included in the price
1 egg tray
1 ice cube tray

Special accessories
RA 030 100
Storage container with transparent lid

Fridge-freezer combination
RT 200

- Net volume 125 litres
- Cushioned door closing system allowing a soft and controlled door closure
- Energy efficiency class A++

Technical Features
Cushioned door closing system from 20° door opening angle, integrated in door hinge.

Freezing
Net volume 15 litres.
Storage temperature -18 °C and lower.
4-star freezer compartment.
Freezing capacity 2 kg/24 h.
Storage time after a malfunction 12 h.

Cooling
Net volume 110 litres.
Automatic defrosting with defrost water evaporation.
2 safety glass shelves, 1 of which height adjustable.
1 pull-out drawer.
1 vegetable compartment.
1 large door rack for bottles.
2 door racks.
Bright interior light.

Consumption data
Energy consumption 140 kwh/year.
Noise level 38 dB (re 1 pW).

Planning notes
Flat hinge.
Door hinge right, reversible.
Door opening angle of 115°, fixable at 90°.
Max. door panel weight 14 kg.
Height-adjustable feet.
Plinth height for appliance height of 820 mm: 100 – 170 mm.
Plinth height for appliance height of 870 mm: 150 – 220 mm.
The enclosed ventilation grille must be used.
The mains socket needs to be planned outside the built-in niche.

Connection
Total connected load 0.09 kW.
Connecting cable 2.3 m with plug.

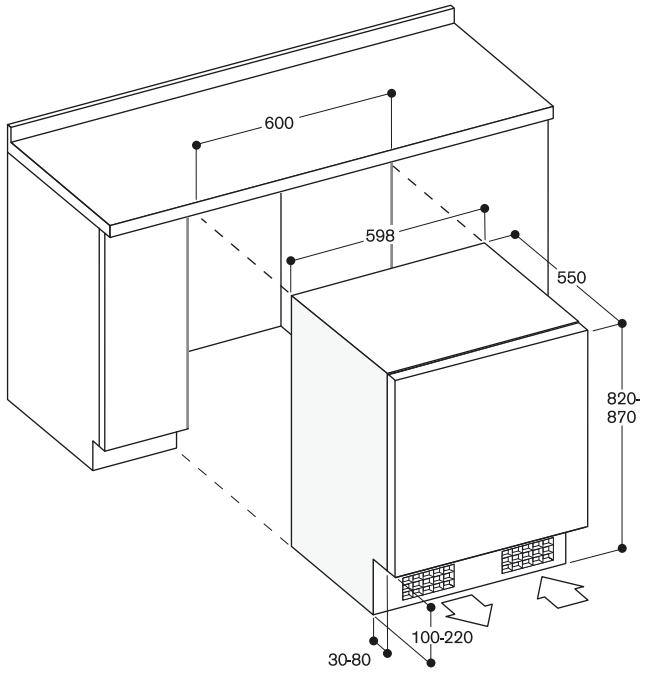

AMadison
Your Appliance Authority™
800-570-3355

RC 200 202
fully integrated, under-counter
Niche width 60 cm, Niche height 82 cm

Included in the price
1 egg tray

Special accessories
RA 030 100
Storage container with transparent lid

Refrigerator
RC 200

- Combines with freezer RF 200 (Side-by-Side)
- Net volume 138 litres
- Cushioned door closing system allowing a soft and controlled door closure
- Energy efficiency class A++

Technical Features
Cushioned door closing system from 20° door opening angle, integrated in door hinge.

Features
Automatic defrosting with defrost water evaporation.
3 safety glass shelves, 2 of which height adjustable.
1 pull-out drawer.
1 vegetable compartment.
1 large door rack for bottles.
2 door racks.
Bright interior light.

Consumption data
Energy consumption 92 kwh/year.
Noise level 38 dB (re 1 pW).

Planning notes
Flat hinge.
Door hinge right, reversible.
Door opening angle of 115°, fixable at 90°.
Max. door panel weight 14 kg.
Height-adjustable feet.
Plinth height for appliance height of 820 mm: 100 – 170 mm.
Plinth height for appliance height of 870 mm: 150 – 220 mm.
The enclosed ventilation grille must be used.
The mains socket needs to be planned outside the built-in niche.

Connection
Total connected load 0.09 kW.
Connecting cable 2.3 m with plug.

RF 200 202
fully integrated, under-counter
Niche width 60 cm, Niche height 82 cm

Included in the price
2 ice packs
1 ice cube tray

Freezer
RF 200

- Combines with cooler RC 200 (Side-by-Side)
- Net volume 98 litres
- Cushioned door closing system allowing a soft and controlled door closure
- Energy efficiency class A+

Technical Features
Cushioned door closing system from 20° door opening angle, integrated in door hinge.
Malfunction signal.

Features
Fast freezing.
Temperature range adjustable.
4-star freezer compartment.
Freezing capacity 12 kg/24 h.
Storage time after a malfunction 23 h.
3 freezer drawers.

Consumption data
Energy consumption 193 kwh/year.
Noise level 38 dB (re 1 pW).

Planning notes
Flat hinge.
Door hinge right, reversible.
Door opening angle of 115°, fixable at 90°.
Max. door panel weight 14 kg.
Height-adjustable feet.
Plinth height for appliance height of 820 mm: 100 – 170 mm.
Plinth height for appliance height of 870 mm: 150 – 220 mm.
The enclosed ventilation grille must be used.
The mains socket needs to be planned outside the built-in niche.

Connection
Total connected load 0.09 kW.
Connecting cable 2.3 m with plug.

AjMadison
Your Appliance Authority
800-570-3355

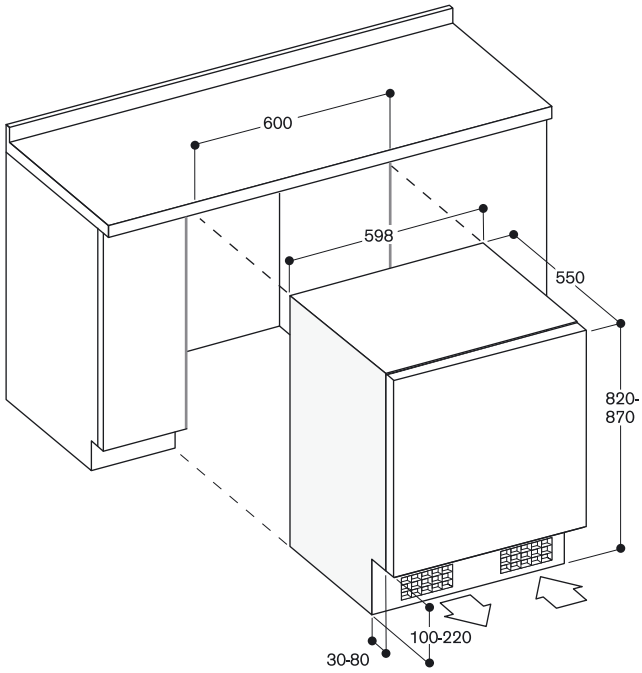

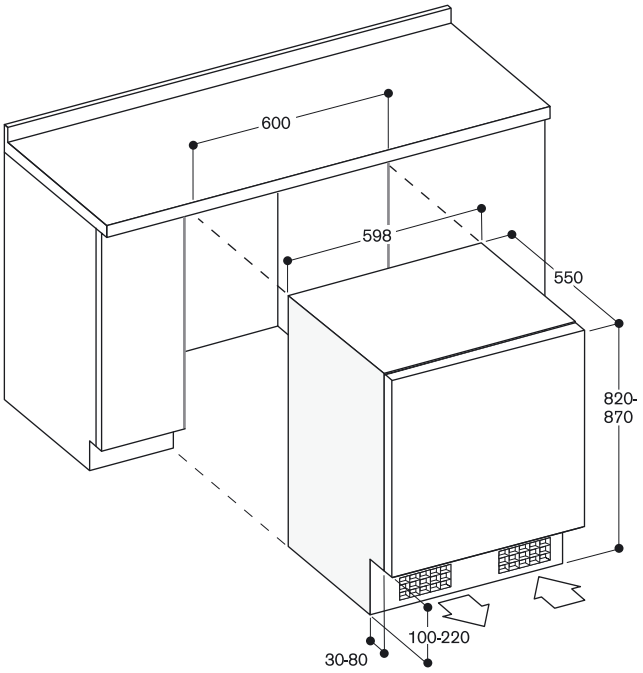

RW 414 361▾
fully integrated, with glass door
Niche width 45.7 cm,
Niche height 213.4 cm

RW 464 361▾
fully integrated, with glass door
Niche width 61 cm,
Niche height 213.4 cm

▾ Available 2. quarter 2013

Necessary installation accessories

RA 460 000
Accessory for side-by-side installation.

RA 460 011
Additional side heating element.

Installation accessories

RA 420 010
Door lock for RW414 and RW464

RA 421 111
Stainless steel door panel frame with handle
For 45.7 cm wide appliances,
left-hinged, panel thickness 19 mm.

RA 421 112
Stainless steel door panel frame with handle
For 45.7 cm wide appliances,
right-hinged, panel thickness 19 mm.

RA 421 131
Aluminium door panel frame with handle
For 45.7 cm wide appliances,
left-hinged, panel thickness 19 mm.

RA 421 132
Aluminium door panel frame with handle
For 45.7 cm wide appliances,
right-hinged, panel thickness 19 mm.

RA 421 611
Stainless steel door panel frame with handle
For 61 cm wide appliances, left-hinged,
panel thickness 19 mm.

RA 421 612
Stainless steel door panel frame with handle
For 61 cm wide appliances,
right-hinged, panel thickness 19 mm.

RA 421 631
Aluminium door panel frame with handle
For 61 cm wide appliances, left-hinged,
panel thickness 19 mm.

RA 421 632
Aluminium door panel frame with handle
For 61 cm wide appliances,
right-hinged, panel thickness 19 mm.

RA 425 110
Handle bar, stainless steel, long
With 3 mounts, length 1,131 mm,
drilling distance between each mount
554 mm.

RA 425 130
Handle bar, aluminium, long
With 3 mounts, length 1,131 mm,
drilling distance between each mount
554 mm.

Vario wine climate cabinet 400 series
RW 414/RW 464

- Two independently controllable climate zones
- Consistant temperatures with exact control from +5 °C to +20 °C
- Humidity control
- Stainless steel interior
- Fully extendable bottle trays in beech and aluminium
- Presentation light option
- Low-vibration operation
- Capacity 70/99 bottles

Handling
Electronic temperature control with digital display.

Technical Features
Dynamic cold air distribution.
Automatic defrosting with defrost water evaporation.
Antimicrobial activated charcoal air filter.
UV-protection.
Energy-saving vacation mode.
Open-door and malfunction alarm.

Features
Net volume 275/394 litres.
Capacity 70/99 bottles
(based on 0.75/l standard bottles).
10 fully extendable bottle trays, up to 4 of which for storage of magnum bottles.
Space for max. 13 bottle trays or shelves in aluminium.
Interior lighting with 2 ceiling spots in the upper and 1/2 ceiling spot in the lower climate zone, can be used as presentation light.

Consumption data
Energy efficiency class B/B.
Energy consumption 228/237 kwh/year.
Noise level 42/42 dB (re 1 pW).

Planning notes
Flat hinge.
Door hinge right, reversible.
Door opening angle of 115°, fixable at 90°.
Max. door panel weight 67/72 kg.
No transport/operation above 1,500 m sea level.

Please read additional planning notes on page 268/269.

Connection
Total connected load 0.121/0.131 kW.
Connecting cable 3.0 m, pluggable.

RA 460 040
Finger protection for extra long furniture fronts

RA 461 116
Ventilation grille stainless steel
For 45.7 cm wide appliances.

RA 461 616
Ventilation grille stainless steel
For 61 cm wide appliances.

Special accessories

RA 093 130
Presenters in aluminium for single bottle display (set of 3) for RW 414

RA 093 630
Presenters in aluminium for single bottle display (set of 3) for RW 464

RA 491 131
Fully extendable bottle tray in beech and aluminium
For 45.7 cm wide appliances.

RA 491 631
Fully extendable bottle tray in beech and aluminium
For 61 cm wide appliances.

RA 492 130
Fully extendable shelves in aluminium
For 45.7 cm wide appliances.
Suitable for decanters, open bottles and humidors.

RA 492 630
Fully extendable shelves in aluminium
For 61 cm wide appliances.
Suitable for decanters, open bottles and humidors.

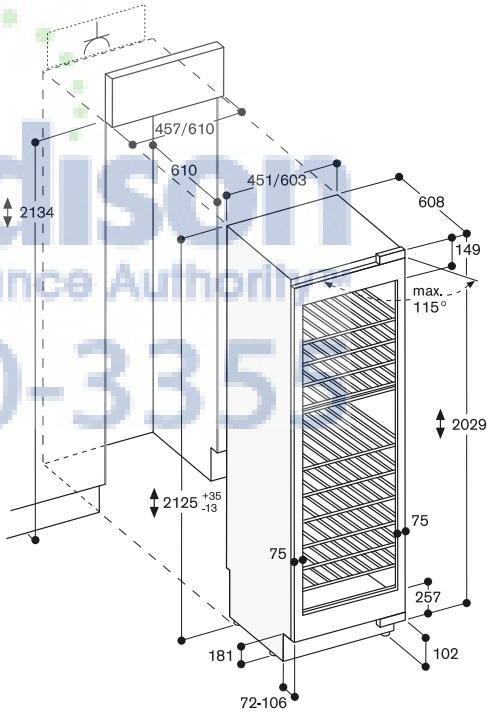

The maximum door panel dimensions are based on a clearance of 3 mm.

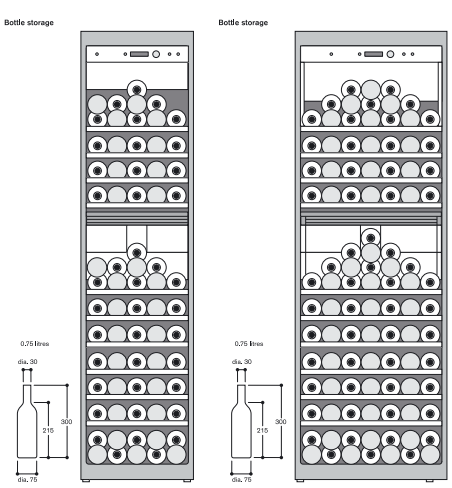

AJMadison
Your Appliance Authority
800-570-3357

RW 414 301▼
fully integrated
Niche width 45.7 cm,
Niche height 213.4 cm

RW 464 301▼
fully integrated
Niche width 61 cm,
Niche height 213.4 cm

▼ Available 2. quarter 2013

Necessary installation accessories

RA 460 000
Accessory for side-by-side installation.

RA 460 011
Additional side heating element.

Installation accessories

RA 420 010
Door lock for RW414 and RW464

RA 421 110
Stainless steel door panel with handle
For 45.7 cm wide appliances, panel thickness 19 mm.

RA 421 130
Aluminium door panel with handle
For 45.7 cm wide appliances, panel thickness 19 mm.

RA 421 610
Stainless steel door panel with handle
For 61 cm wide appliances, panel thickness 19 mm.

RA 421 630
Aluminium door panel with handle
For 61 cm wide appliances, panel thickness 19 mm.

RA 425 110
Handle bar, stainless steel, long
With 3 mounts, length 1,131 mm, drilling distance between each mount 554 mm.

RA 425 130
Handle bar, aluminium, long
With 3 mounts, length 1,131 mm, drilling distance between each mount 554 mm.

RA 460 020
Connecting element for vertically split appliance fronts (for a flush front)

RA 460 040
Finger protection for extra long furniture fronts

RA 461 116
Ventilation grille stainless steel
For 45.7 cm wide appliances.

RA 461 616
Ventilation grille stainless steel
For 61 cm wide appliances.

Special accessories

RA 491 131
Fully extendable bottle tray in beech and aluminium
For 45.7 cm wide appliances.

RA 491 631
Fully extendable bottle tray in beech and aluminium
For 61 cm wide appliances.

Vario wine climate cabinet 400 series
RW 414/RW 464

- Two independently controllable climate zones
- Consistant temperatures with exact control from +5 °C to +20 °C
- Humidity control
- Stainless steel interior
- Fully extendable bottle trays in beech and aluminium
- Presentation light option
- Low-vibration operation
- Capacity 70/99 bottles

Handling
Electronic temperature control with digital display.

Technical Features
Dynamic cold air distribution.
Automatic defrosting with defrost water evaporation.
Antimicrobial activated charcoal air filter.
UV-protection.
Energy-saving vacation mode.
Open-door and malfunction alarm.

Features
Net volume 275/394 litres.
Capacity 70/99 bottles
(based on 0.75/l standard bottles).
10 fully extendable bottle trays, up to 4 of which for storage of magnum bottles.
Space for max. 13 bottle trays or shelves in aluminium.
Interior lighting with 2 ceiling spots in the upper and 1/2 ceiling spot in the lower climate zone, can be used as presentation light.

Consumption data
Energy efficiency class B/B.
Energy consumption 221/237 kwh/year.
Noise level 42/42 dB (re 1 pW).

Planning notes
Flat hinge.
Door hinge right, reversible.
Door opening angle of 115°, fixable at 90°.
Max. door panel weight 74/77 kg.
No transport/operation above 1,500 m sea level.

Please read additional planning notes on page 268/269.

Connection
Total connected load 0.121/0.131 kW.
Connecting cable 3.0 m, pluggable.

RA 492 130
Fully extendable shelves in aluminium
For 45.7 cm wide appliances.
Suitable for decanters, open bottles and humidors.

RA 492 630
Fully extendable shelves in aluminium
For 61 cm wide appliances.
Suitable for decanters, open bottles and humidors.

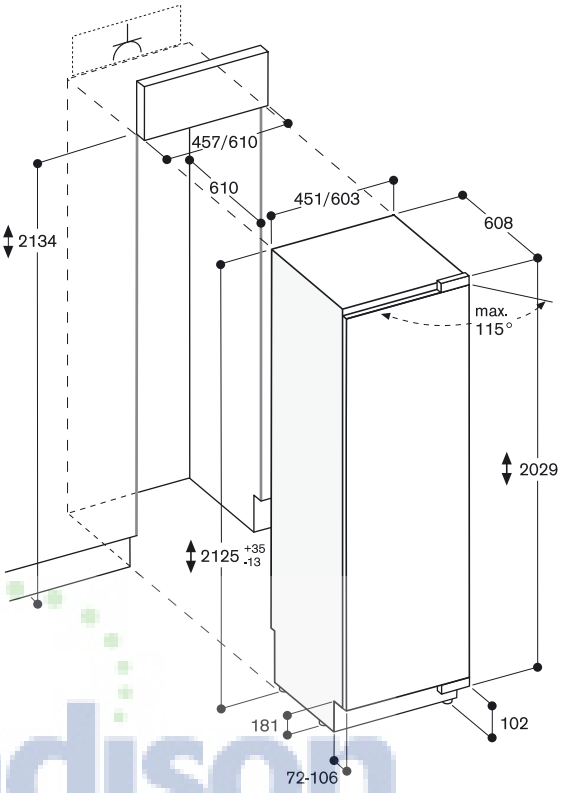

The maximum door panel dimensions are based on a clearance of 3 mm.

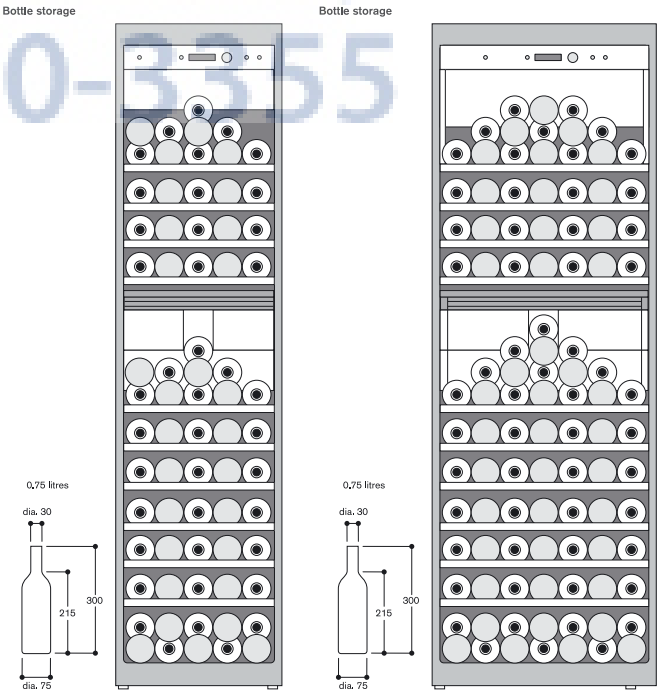

AJMadison
Your Appliance Authority™
800-570-3355

RW 424 260
integrated, stainless steel-framed glass door
Niche width 56 cm,
Niche height 122.1 cm

Special accessories

RA 050 200
Replacement activated charcoal air filters, set of two, for upper and lower temperature zone

RA 093 230
Presenters in aluminium for single bottle display (set of 3)

RA 492 200
Shelves, set of 2 in glass
Suitable for decanters, open bottles and humidors.

Wine climate cabinet
RW 424

- Two independently controllable climate zones
- Consistant temperatures with exact control from +5 °C to +20 °C
- Extendable bottle trays in beech and aluminium
- Presentation light option
- Capacity 64 bottles

Handling
Electronic temperature control with digital display.
Presentation light option in each climate zone, dimmable.
Interior lighting with automatic dimming with opening and closing of door.

Technical Features
Dynamic cold air distribution.
Humidity control.
2 activated charcoal air filters,
1 in each climate zone.
UV-protection.
Energy-saving vacation mode.
Open-door and malfunction alarm.

Features
Net volume 187 litres.
Capacity 64 bottles
(based on 0.75/l standard bottles).
6 bottle trays, 4 of which are extendable.
Storage of magnum bottles possible.

Consumption data
Energy efficiency class A.
Energy consumption 155 kwh/year.
Noise level 38 dB (re 1 pW).

Planning notes
Door hinge right, reversible.
The façade of the appliance extends 25 mm from the furniture cavity.
Door opening angle fixable at 95°.
For integration next to a side wall a clearance of 100 mm hinge side is necessary.
The mains socket needs to be planned outside the built-in niche.
No transport/operation above 1,500 m sea level.

Connection
Total connected load 0.13 kW.
Connecting cable 2.1 m with plug.

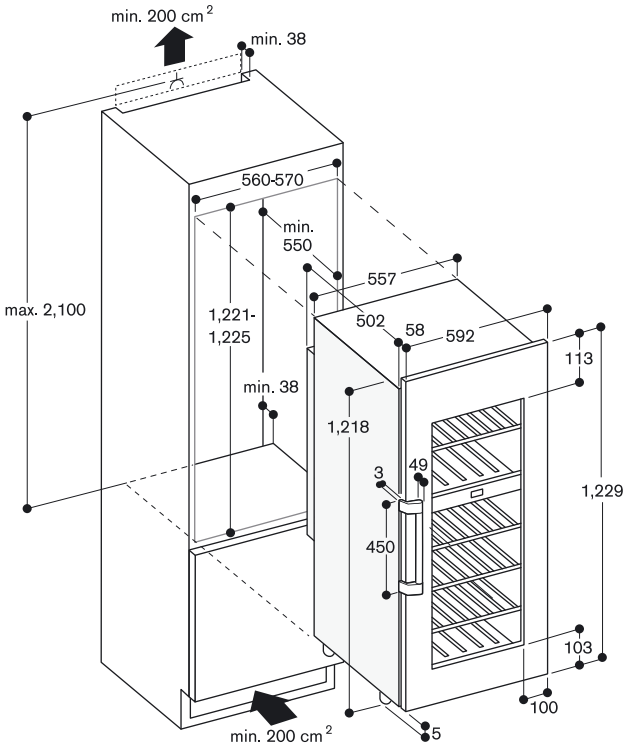

Bottle storage

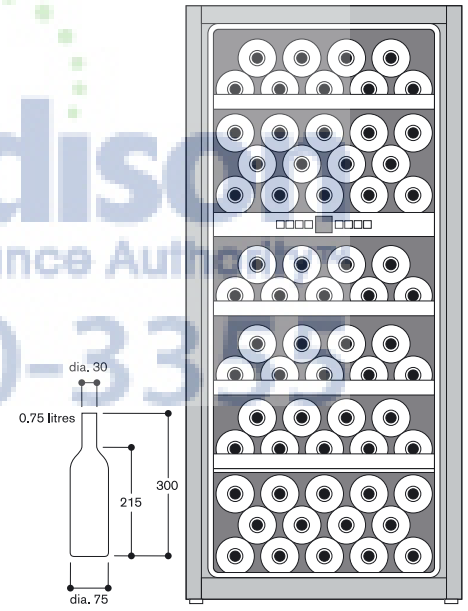

AMadison
Home Appliance Authority
800-570-3388

RW 404 260
under-counter, stainless steel-framed glass door
Niche width 60 cm, Niche height 82 cm

Special accessories

RA 050 200
Replacement activated charcoal air filters, set of two, for upper and lower temperature zone

RA 491 630
Extendable bottle tray in beech and aluminium
Can be installed as forth drawer above the temperature divider.

Wine climate cabinet
RW 404

- Two independently controllable climate zones
- Consistant temperatures with exact control from +5 °C to +20 °C
- Extendable bottle trays in beech and aluminium
- Presentation light option
- Lockable door
- Capacity 41 bottles

Handling
Electronic temperature control with digital display.
Presentation light option in each climate zone, dimmable.
Interior lighting with automatic dimming with opening and closing of door.

Technical Features
Dynamic cold air distribution.
Humidity control.
2 activated charcoal air filters, 1 in each climate zone.
UV-protection.
Energy-saving vacation mode.
Open-door and malfunction alarm.

Features
Net volume 126 litres.
Capacity 41 bottles
(based on 0.75/l standard bottles).
5 bottle trays, 3 of which are extendable.
Storage of magnum bottles possible.

Consumption data
Energy efficiency class C.
Energy consumption 253 kwh/year.
Noise level 43 dB (re 1 pW).

Planning notes
Door hinge right, reversible.
Height-adjustable feet.
Door opening angle fixable at 95°.
For integration next to a side wall a clearance of 150 mm hinge side is necessary.
The mains socket needs to be planned outside the built-in niche.
No transport/operation above 1,500 m sea level.

Connection
Total connected load 0.13 kW.
Connecting cable 1.8 m with plug.

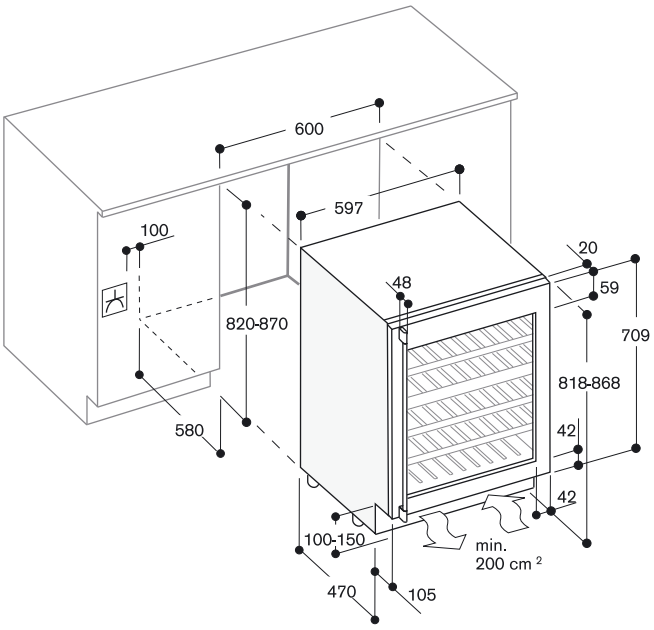

Bottle storage

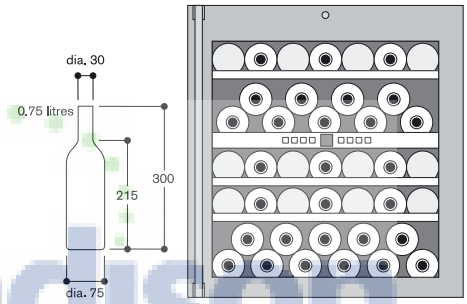

AJMadison
Your Appliance Authority™
800-570-3355

Wine storage cabinet
RW 262

- One multi-temperature climate zone
- Consistant temperatures with exact control from +5 °C to +22 °C
- Bottle trays in beech and aluminium
- Presentation light option
- Lockable door
- Capacity 172 bottles

Handling
Electronic temperature control with digital display.

Technical Features
Dynamic cold air distribution.
Activated charcoal air filter.
UV-protection.
Energy-saving vacation mode.
Open-door and malfunction alarm.

Features
Net volume 365 litres.
Capacity 172 bottles
(based on 0.75/l standard bottles).
6 bottle trays, removable and height adjustable.

Consumption data
Energy efficiency class B.
Energy consumption 212 kwh/year.
Noise level 42 dB (re 1 pW).

Planning notes
Door hinge right, reversible.
Front feet are height-adjustable, casters at the back.
Min. door opening angle of 145°.
Can be built-in up to corpus depth.
500 mm clearance hinge side and 60 mm handle side necessary.
No transport/operation above 1,700 m sea level.

Connection
Total connected load 0.2 kW.
Connecting cable 2.3 m with plug.

RW 262 270
freestanding, aluminium-framed glass door
Width 59.5 cm, height 185.5 cm

Included in the price
2 presenters in aluminium for single bottle display
1 special presenter in aluminium for single bottle display aluminium, incl. temperature display for one bottle

Special accessories
RA 050 210
Replacement activated charcoal air filter
RA 293 030
Presenters in aluminium for single bottle display (set of 3)
RA 293 031
Presenter in aluminium for single bottle display incl. one temperature indicator

Industrie Forum Design Hannover

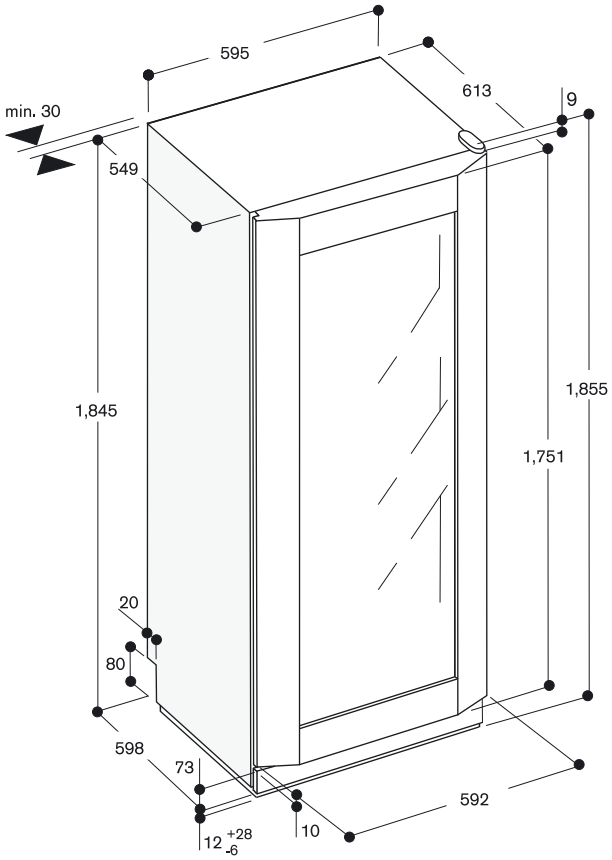

Bottle storage

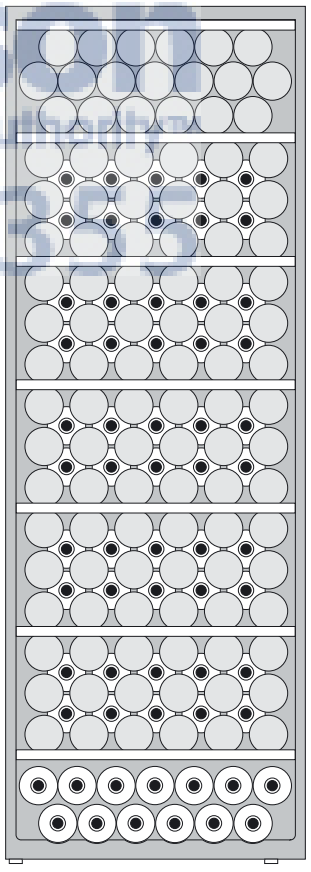

Wall clearance RW 262

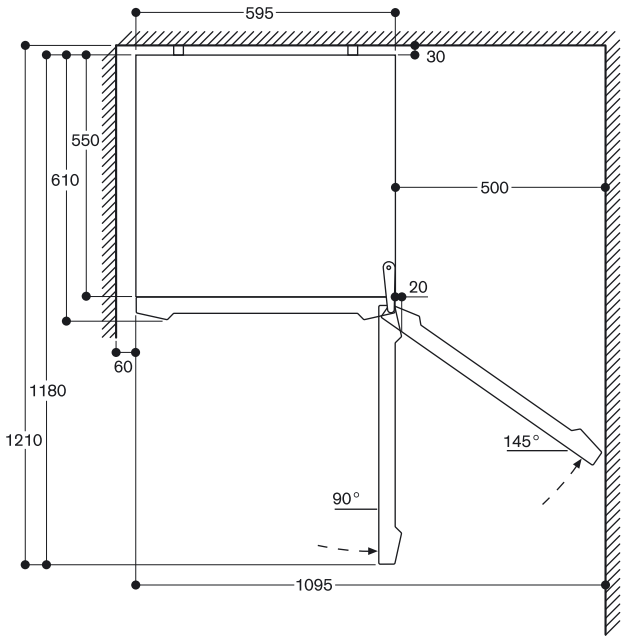

Door opening angle must be at least 145° to be able to remove the shelf.

AMadison
Your Appliance Authority
800-570-3333

AjMadison
Your Appliance Authority™
800-570-3355

GF 111 100
Descaling and neutralising filter for first installation.
Descaling system, recommended to be installed if water hardness exceeds 7°dH or carbon hardness 5°dH. Filter head with integrated non-return valve and filter.

GF 121 110
Filter cartridge

GN 114 130
Gastronorm insert, stainless steel, GN 1/3
Unperforated, 40 mm deep, 1.5 l.

GN 114 230
Gastronorm insert, stainless steel, GN 2/3
Unperforated, 40 mm deep, 3 l.

GN 410 130
Gastronorm lid, stainless steel, GN 1/3
For stainless steel gastronorm inserts.

GN 410 230
Gastronorm lid, stainless steel, GN 2/3
For stainless steel gastronorm inserts.

RA 030 100
Storage container with transparent lid

RA 050 200
Replacement activated charcoal air filters, set of two, for upper and lower temperature zone

RA 050 210
Replacement activated charcoal air filter

RA 093 130
Presenters in aluminium for single bottle display (set of 3) for RW 414

RA 093 230
Presenters in aluminium for single bottle display (set of 3)

RA 093 630
Presenters in aluminium for single bottle display (set of 3) for RW 464

RA 293 030
Presenters in aluminium for single bottle display (set of 3)

RA 293 031
Presenter in aluminium for single bottle display incl. one temperature indicator

RA 420 010
Door lock

AjMadison
Your Appliance Authority™
800-570-3355

RA 421 110
Stainless steel door panel with handle
For 45.7 cm wide appliances, panel thickness 19 mm.

RA 421 111
Stainless steel door panel frame with handle
For 45.7 cm wide appliances, left-hinged, panel thickness 19 mm.

RA 421 112
Stainless steel door panel frame with handle
For 45.7 cm wide appliances, right-hinged, panel thickness 19 mm.

RA 421 130
Aluminium door panel with handle
For 45.7 cm wide appliances, panel thickness 19 mm.

RA 421 131
Aluminium door panel frame with handle
For 45.7 cm wide appliances, left-hinged, panel thickness 19 mm.

RA 421 132
Aluminium door panel frame with handle
For 45.7 cm wide appliances, right-hinged, panel thickness 19 mm.

RA 421 610
Stainless steel door panel with handle
For 61 cm wide appliances, panel thickness 19 mm.

RA 421 611
Stainless steel door panel frame with handle
For 61 cm wide appliances, left-hinged, panel thickness 19 mm.

AjMadison
Your Appliance Authority™
800-570-3555

RA 421 612
Stainless steel door panel frame with handle
For 61 cm wide appliances, right-hinged, panel thickness 19 mm.

RA 421 630
Aluminium door panel with handle
For 61 cm wide appliances, panel thickness 19 mm.

RA 421 631
Aluminium door panel frame with handle
For 61 cm wide appliances, left-hinged, panel thickness 19 mm.

RA 421 632
Aluminium door panel frame with handle
For 61 cm wide appliances, right-hinged, panel thickness 19 mm.

RA 421 710
Stainless steel door panel with handle
For 76.2 cm wide appliances, panel thickness 19 mm.

RA 421 712
Stainless steel door panel with handle
For RB 472, panel thickness 19 mm.

RA 421 730
Aluminium door panel with handle
For 76.2 cm wide appliances, panel thickness 19 mm.

RA 421 732
Aluminium door panel with handle
For RB 472, panel thickness 19 mm.

AjMadison
Your Appliance Authority™
800-570-3355

RA 421 910
Stainless steel door panels with handles
For RB 491, panel thickness 19 mm.

RA 422 110
Stainless steel door panel with handle
For 45.7 cm wide appliances, panel thickness 19 mm.

RA 421 912
Stainless steel door panels with handles
For RY 491, panel thickness 19 mm.

RA 422 130
Aluminium door panel with handle
For 45.7 cm wide appliances, panel thickness 19 mm.

RA 421 930
Aluminium door panels with handles
For RB 491, panel thickness 19 mm.

RA 422 610
Stainless steel door panel with handle
For 61 cm wide appliances, panel thickness 19 mm.

RA 421 932
Aluminium door panels with handles
For RY 491, panel thickness 19 mm.

RA 422 630
Aluminium door panel with handle
For 61 cm wide appliances, panel thickness 19 mm.

AiMadison
Your Appliance Authority™
800-570-3355

RA 423 910
Cladding set in stainless steel
For freestanding RB/RY 491 (side walls, top, plinth panel).
Door panels and ventilation grille in stainless steel must be ordered separately.
Cladded appliance measurements overall:Width 96 cm, height 215 cm, depth 63 cm.
Appliance must be fixed to the wall at the top rear.

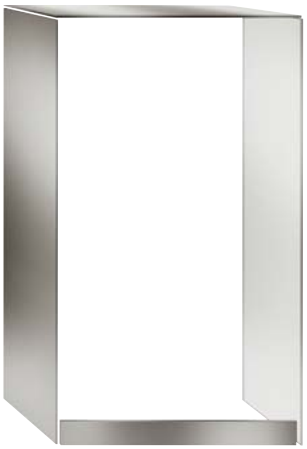

RA 425 110
Handle bar, stainless steel, long
With 3 mounts, length 1,131 mm, drilling distance between each mount 554 mm.

RA 425 130
Handle bar, aluminium, long
With 3 mounts, length 1,131 mm, drilling distance between each mount 554 mm.

RA 425 710
Handle bar, stainless steel
With 2 mounts, length 658 mm, drilling distance between each mount 637 mm.

RA 425 730
Handle bar, aluminium, short
With 2 mounts, length 658 mm, drilling distance between each mount 637 mm.

RA 425 910
Handle bar, stainless steel, short
With 2 mounts, length 810 mm, drilling distance between the mounts 787 mm.

RA 425 930
Handle bar, aluminium, short
With 2 mounts, length 810 mm, drilling distance between the mounts 787 mm.

RA 450 010
Activated charcoal filter for water filter system including saturation indicator

RA 460 000
Accessory for side-by-side installation

RA 460 011
Additional side heating element

RA 460 020
Connecting element for vertically split appliance fronts (for a flush front)

RA 460 030
Connecting element for vertically split fronts (for fridge-freezer combination)

RA 460 040
Finger protection for extra long furniture fronts

RA 461 116
Ventilation grille stainless steel
For 45.7 cm wide appliances.

RA 462 110
Ventilation grille stainless steel
For RF 413 202, right-hinged.

RA 462 111
Ventilation grille stainless steel
For RF 413 203, left-hinged.

RA 461 616
Ventilation grille stainless steel
For 61 cm wide appliances.

RA 462 610
Ventilation grille stainless steel
For RF 463 202, right-hinged.

RA 462 611
Ventilation grille stainless steel
For RF 463 203, left-hinged.

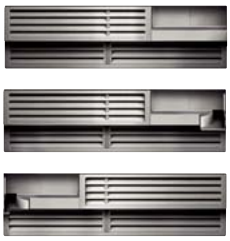

RA 461 714
Ventilation grille stainless steel
For 76.2 cm wide appliances.

RA 461 715
Ventilation grille stainless steel
For RB 472.

RA 461 911
Ventilation grille stainless steel
For 91.4 cm wide appliances.

RA 491 131
Fully extendable bottle tray in beech and aluminium
For 45.7 cm wide appliances.

RA 491 630
Extendable bottle tray in beech and aluminium
Can be installed as forth drawer above the temperature divider.

RA 491 631
Fully extendable bottle tray in beech and aluminium
For 61 cm wide appliances.

RA 492 130
Fully extendable shelves in aluminium
For 45.7 cm wide appliances.
Suitable for decanters, open bottles and humidors.

RA 492 200
Shelves, set of 2 in glass
Suitable for decanters, open bottles and humidors.

RA 492 630
Fully extendable shelves in aluminium
For 61 cm wide appliances.
Suitable for decanters, open bottles and humidors.

AjMadison
Your Appliance Authority™
800-570-3355

AjMadison
Your Appliance Authority™
800-570-3355

Appliance type		Fridge-freezer combination	Fridge-freezer combination	Fridge-freezer combination	Cooler
Fully integrated / integrated		RY 491 200	RB 491 200	RB 472 301[4]	RC 462 200
Dimensions					
Appliance dimensions W x H x D	(cm)	90.8 x 212.5 x 60.8	90.8 x 212.5 x 60.8	75.6 x 212.5 x 60.8	60.3 x 212.5 x 60.8
Niche dimensions W x H x D	(cm)	91.4 x 213.4 x 61	91.4 x 213.4 x 61	76.2 x 213.4 x 61	61 x 213.4 x 61
Depth including wall clearance	(cm)	61	61	61	61
Weight when empty	(kg)	252	250	189	176
Shipping weight	(kg)	274	271	218	193
Maximum load weight	(kg)	622	616	433	555
Transport package dimensions W x H x D	(cm)	100 x 228 x 75	100 x 226 x 74	85.3 x 225 x 74.3	70 x 228 x 74
Type and configuration					
Fully integrated / integrated / under-counter / free-standing		•/–/–/◦	•/–/–/◦	•/–/–/–	•/–/–/–
Door hinge right / left / reversible		•/•/–	•/–/•	•/–/•	•/–/•
Full panelling / door panelling		◦/◦	◦/◦	–/◦	–/◦
Volume / consumption data					
Cooling / fresh cooling / fresh cooling zone close to 0 °C / freezing / wine		•/•/–/•/–	•/•/–/•/–	•/•/–/•/–	•/–/•/–/–
Total gross volume / total net volume	(l)	560/530	560/530	521/439	381/365
– Net volume of cooling	(l)	367	367	300	314
– Net volume of fresh cooling zone close to 0 °C / fresh cooling	(l)	25	25	19	51
– Net volume of freezing	(l)	138	138	119	–
Storage capacity 0.75 litre bottles	(no.)	–	–	–	–
Energy efficiency class[2]		A+	A+	A++	A+
Daily energy consumption DIN EN 153[3]	(kWh/24h)	1,204	1,204	0.800	0.48
Annual energy consumption DIN EN 153[3]	(kWh)	440	440	292	176
Daily energy consumption per 100 l of net volume[3]	(kWh)	0.23	0.23	0.18	0.13
Noise level	(dB (re 1pW))	42	42	43	40
Climate class		SN – T	SN – T	T	SN – T
Features					
Ice and water dispenser with ice cubes / crushed ice / water		•/–/–	•/–/–	•/–/–	–/–/–
Fresh cooling zones with humidity control	(no.)	–	–	–	1
Cooling zones with humidity control	(no.)	–	–	–	–
Temperature / climate zones	(no.)	3	3	3	2
Temperature display internal / external		•/–	•/–	•/–	•/–
Temperature adjustable to the precise degree		•	•	•	•
No-Frost technology		•	•	•	•
Automatic defrosting: cooling / fresh cooling / freezing		•/•/•	•/•/•	•/•/•	•/•/–
Presentation light		–	–	–	–
Lock		–	–	–	–
Humidity control		–	–	–	–
Activated charcoal air filter		–	–	–	–
Antimicrobial activated charcoal air filter		•	•	•	•
Low-vibration operation		–	–	–	–
UV-protection		–	–	–	–
Stainless steel interior		•	•	•	•
Vacation mode		•	•	•	•
Malfunction, visual / audible warning signal		•/•	•/•	•/•	•/•
Door open, visual / audible warning signal or door lock indication		–/•	–/•	–/•	–/•
Cooling / fresh cooling					
Fast cooling		•	•	•	•
Dynamic cold air distribution		•	•	•	•
Levels in the interior	(no.)	4	4	3	4
Containers / drawers in the interior	(no.)	3	3	2	2
Door racks	(no.)	6	3	3	4
Egg racks	(no. of eggs)	18	18	18	18
Wine					
Max. levels in the interior		–	–	–	–
Bottle tray fully extendable / extendable		–	–	–	–
Shelf fully extendable / extendable		–	–	–	–
Storage of Magnum bottles possible		–	–	–	–
Suitable for decanters, open bottles and humidors		–	–	–	–
Freezing					
Fast freezing		•	•	•	–
Freezing capacity	(kg/24h)	23	23	14	–
Storage time after a malfunction	(Std.)	22	22	18	–
Interior compartments	(no.)	–	–	–	–
Baskets, containers, drawers in the interior	(no.)	2	2	2	–
Door racks	(no.)	–	–	–	–
Ice cub trays	(no.)	1	1	1	–
Connection					
Total connected load	(kW)	0.574	0.574	0.177	0.266
Water connection inlet		•	•	•	–

• Standard. – Not available. ◦ Special accessory.

[1] RF 4.3 .00 only right, RF 4.3 .01 only left.

[2] Values according to EU regulation 1060/2010.

[3] Effective consumption depends on the use/location of appliance.

[4] Available 2. quarter 2013.

AjMadison
Your Appliance Authority™
800-570-3355

Cooler	Refridgerator	Refridgerator	Refridgerator	Refridgerator	Refridgerator
RC 472 200	RF 413 202/203	RF 463 202/203	RF 411 200	RF 461 200	RF 471 200
75.6 x 212.5 x 60.8	45.1 x 212.5 x 60.8	60.3 x 212.5 x 60.8	45.1 x 212.5 x 60.8	60.3 x 212.5 x 60.8	75.6 x 212.5 x 60.8
76.2 x 213.4 x 61	45.7 x 213.4 x 61	61 x 213.4 x 61	45.7 x 213.4 x 61	61 x 213.4 x 61	76.2 x 213.4 x 61
61	61	61	61	61	61
203	139	174	138	172	193
222	153	189	152	187	210
564	300	401	300	401	483
82 x 225 x 74	54 x 225 x 74	70 x 225 x 74	54 x 228 x 74	70 x 225 x 74	85 x 226 x 74
•/–/–/–	•/–/–/–	•/–/–/–	•/–/–/–	•/–/–/–	•/–/–/–
•/–/•	•[1]/•[1]/–	•[1]/•[1]/–	–/•/•	–/•/•	–/•/•
–/◦	–/◦	–/◦	–/◦	–/◦	–/◦
•/–/•/–/–	–/–/–/•/–	–/–/–/•/–	–/–/–/•/–	–/–/–/•/–	–/–/–/•/–
496/477	219/191	320/294	237/211	340/314	443/417
410	–	–	–	–	–
67	–	–	–	–	–
–	191	294	211	314	417
–	–	–	–	–	–
A+	A+	A+	A+	A+	A+
0.52	0.838	0.969	0.887	1.009	1.216
190	306	354	324	369	444
0.11	0.44	0.33	0.42	0.32	0.29
40	41	41	41	41	42
SN – T	SN – T	SN – T	SN – T	SN – T	SN – T
–/–/–	•/•/•	•/•/•	•/–/–	•/–/–	•/–/–
1	–	–	–	–	–
–	–	–	–	–	–
2	1	1	1	1	1
•/–	•/–	•/–	•/–	•/–	•/–
•	•	•	•	•	•
•	•	•	•	•	•
•/•/–	–/–/•	–/–/•	–/–/•	–/–/•	–/–/•
–	–	–	–	–	–
–	–	–	–	–	–
–	–	–	–	–	–
–	–	–	–	–	–
•	–	–	–	–	–
–	–	–	–	–	–
–	–	–	–	–	–
•	•	•	•	•	•
•	•	•	•	•	•
•/•	•/•	•/•	•/•	•/•	•/•
–/•	–/•	–/•	–/•	–/•	–/•
•	–	–	–	–	–
•	–	–	–	–	–
4	–	–	–	–	–
2	–	–	–	–	–
4	–	–	–	–	–
18	–	–	–	–	–
–	–	–	–	–	–
–	–	–	–	–	–
–	–	–	–	–	–
–	–	–	–	–	–
–	–	–	–	–	–
–	•	•	•	•	•
–	9	14	18	18	20
–	10	14	14	19	19
–	4	4	4	4	4
–	2	2	2	2	2
–	2	2	5	5	5
–	1	1	1	1	1
0.311	0.55	0.592	0.366	0.421	0.501
–	•	•	•	•	•

AjMadison
Your Appliance Authority™
800-570-3355

Appliance type		Wine climate cabinet	Wine climate cabinet	Wine climate cabinet	Wine climate cabinet
Fully integrated / integrated		RW 414 361[4]	RW 464 361[4]	RW 414 301[4]	RW 464 301[4]
Dimensions					
Appliance dimensions W x H x D	(cm)	45.1 x 212.5 x 60.8	60.3 x 212.5 x 60.8	45.1 x 212.5 x 60.8	60.3 x 212.5 x 60.8
Niche dimensions W x H x D	(cm)	45.7 x 213.4 x 61	61 x 213.4 x 61	45.7 x 213.4 x 61	61 x 213.4 x 61
Depth including wall clearance	(cm)	61	61	61	61
Weight when empty	(kg)	148	175	148	175
Shipping weight	(kg)	163	192	163	192
Maximum load weight	(kg)	377	571	377	571
Transport package dimensions W x H x D	(cm)	54 x 226 x 74	70 x 228 x 74	54 x 226 x 74	70 x 228 x 74
Type and configuration					
Fully integrated / integrated / under-counter / free-standing		•/–/–/–	•/–/–/–	•/–/–/–	•/–/–/–
Door hinge right / left / reversible		•/–/•	•/–/•	•/–/•	•/–/•
Full panelling / door panelling		–/◦	–/◦	–/◦	–/◦
Volume / consumption data					
Cooling / fresh cooling / fresh cooling zone close to 0 °C / freezing / wine		–/–/–/–/•	–/–/–/–/•	–/–/–/–/•	–/–/–/–/•
Total gross volume / total net volume	(l)	296/275	422/394	296/275	422/394
– Net volume of cooling	(l)	–	–	–	–
– Net volume of fresh cooling zone close to 0 °C / fresh cooling	(l)	–	–	–	–
– Net volume of freezing	(l)	–	–	–	–
Storage capacity 0.75 litre bottles	(no.)	70	99	70	99
Energy efficiency class[2]		C	C	B	B
Daily energy consumption DIN EN 153[3]	(kWh/24h)	0.76	0.818	0.603	0.647
Annual energy consumption DIN EN 153[3]	(kWh)	278	299	221	237
Daily energy consumption per 100 l of net volume[3]	(kWh)	0.28	0.21	0.22	0.16
Noise level	(dB (re 1pW))	42	42	42	42
Climate class		SN – T	SN – T	SN – T	SN – T
Features					
Ice and water dispenser with ice cubes / crushed ice / water		–/–/–	–/–/–	–/–/–	–/–/–
Fresh cooling zones with humidity control	(no.)	–	–	–	–
Cooling zones with humidity control	(no.)	–	–	–	–
Temperature / climate zones	(no.)	2	2	2	2
Temperature display internal / external		•/–	•/–	•/–	•/–
Temperature adjustable to the precise degree		•	•	•	•
No-Frost technology		•	•	•	•
Automatic defrosting: cooling / fresh cooling / freezing		•/–/–	•/–/–	•/–/–	•/–/–
Presentation light		•	•	•	•
Lock		◦	◦	◦	◦
Humidity control		•	•	•	•
Activated charcoal air filter		–	–	–	–
Antimicrobial activated charcoal air filter		•	•	•	•
Low-vibration operation		•	•	•	•
UV-protection		•	•	•	•
Stainless steel interior		•	•	•	•
Vacation mode		•	•	•	•
Malfunction, visual / audible warning signal		•/•	•/•	•/•	•/•
Door open, visual / audible warning signal or door lock indication		–/•	–/•	–/•	–/•
Cooling / fresh cooling					
Fast cooling		–	–	–	–
Dynamic cold air distribution		–	–	–	–
Levels in the interior	(no.)	–	–	–	–
Containers / drawers in the interior	(no.)	–	–	–	–
Door racks	(no.)	–	–	–	–
Egg racks	(no. of eggs)	–	–	–	–
Wine					
Max. levels in the interior		13	13	13	13
Bottle tray fully extendable / extendable		•	•	•	•
Shelf fully extendable / extendable		◦	◦	◦	◦
Storage of Magnum bottles possible		•	•	•	•
Suitable for decanters, open bottles and humidors		◦	◦	◦	◦
Freezing					
Fast freezing		–	–	–	–
Freezing capacity	(kg/24h)	–	–	–	–
Storage time after a malfunction	(Std.)	–	–	–	–
Interior compartments	(no.)	–	–	–	–
Baskets, containers, drawers in the interior	(no.)	–	–	–	–
Door racks	(no.)	–	–	–	–
Ice cub trays	(no.)	–	–	–	–
Connection					
Total connected load	(kW)	0.121	0.131	0.121	0.131
Water connection inlet		–	–	–	–

• Standard. – Not available. ◦ Special accessory.

[1] RF 4.3 .00 only right, RF 4.3 .01 only left.

[2] Values according to EU regulation 1060/2010.

[3] Effective consumption depends on the use/location of appliance.

[4] Available 2. quarter 2013.

AjMadison Your Appliance Authority 800-570-3355

Appliance type		Wine storage cabinet	Wine climate cabinet	Wine storage cabinet
Stainless steel glass door			RW 424 260	RW 404 260
Aluminium glass door		RW 262 270		
Appliance dimensions W x H x D				
Niche dimensions W x H x D	(cm)	60 x 185.5 x 61.3	55.7 x 122.9 x 56	59.7 x 81.8–86.8 x 57.5
Depth including wall clearance	(cm)	–	56 x 122.1 x 55	60 x 82-87 x 58
Weight when empty	(cm)	61.3+3	55	58
Shipping weight	(kg)	84	46.9	57.7
Maximum load weight	(kg)	86	52	60.5
Transport package dimensions W x H x D	(cm)	61 x 192 x 68	63.7 x 132 x 62.2	64 x 86 x 66
Type and configuration				
Fully integrated / integrated / under-counter / free-standing		–/–/–/•	–/•/–/–	–/–/•/–
Door hinge right / left / reversible		•/–/•	•/–/•	•/–/•
Full panelling / door panelling		•/–	–/–	–/–
Volume / consumption data				
Cooling / fresh cooling / fresh cooling zone close to 0°C / freezing / wine		–/–/–/–/•	–/–/–/–/•	–/–/–/–/•
Total gross volume / total net volume	(l)	414/365	195/187	127/126
Storage capacity 0.75 litre bottles	(no.)	172	64	41
Energy efficiency class[2]		B	A	C
Daily energy consumption DIN EN 153[3]	(kWh/24h)	0.58	0.424	0.687
Annual energy consumption DIN EN 153[3]	(kWh)	212	155	251
Daily energy consumption per 100 l of net volume[3]	(kWh)	0.16	0.23	0.55
Noise level	(dB (re 1pW))	42	38	43
Climate class		SN – ST	SN – ST	SN – ST
Features				
Temperature / climate zones	(no.)	1	2	2
Temperature display internal / external		•/–	•/–	•/–
Temperature adjustable to the precise degree		•	•	•
Automatic defrosting: cooling / fresh cooling / freezing		•/–/–	•/–/–	•/–/–
Presentation light		•	•	•
Lock		•	–	•
Humidity control		•	•	•
Activated charcoal air filter		•	•	•
Low-vibration operation		•	•	•
UV-protection		•	•	•
Malfunction, visual / audible warning signal		•/–	•/–	•/–
Door open, visual / audible warning signal or door lock indication		–/–	–/•	–/•
Cooling / fresh cooling				
Dynamic cold air distribution		–	•	•
Wine				
Max. levels in the interior		11	6	5
Bottle tray fully extendable / extendable		–/–	–/•	–/•
Shelf fully extendable / extendable		–/–	–/–	–/–
Storage of Magnum bottles possible		•	•	•
Suitable for decanters, open bottles and humidors		–	◦	–
Connection				
Total connected load	(kW)	0.09	0.13	0.13

• Standard. – Not available. ◦ Special accessory.

[1] Values according to EU regulation 1060/2010.

[2] Effective consumption depends on the use/location of appliance.

AjMadison Your Appliance Authority™ 800-570-3355

Vario cooling appliances 200 series.

Appliance type		Side-by-Side	Fridge-freezer combination	Fridge-freezer combination	Fridge-freezer combination
Fully integrated / integrated			RB 289 202	RB 287 202	RT 289 202
Fully integrated, aluminium-coloured innerliner					
Stainless steel		RS 295 311			
Aluminium		RS 295 330			
Dimensions					
Appliance dimensions W x H x D	(cm)	91.4 x 178 x 70.3	55.6 x 177.2 x 54.5	55.6 x 177.2 x 54.5	55.6 x 177.2 x 54.5
Niche dimensions W x H x D	(cm)	–	56 x 177.5 x 55	56 x 177.5 x 55	56 x 177.5 x 55
Depth including wall clearance	(cm)	70.3+2.5	55	55	55
Weight when empty	(kg)	169	74	69	70
Shipping weight	(kg)	187	80	75	76
Transport package dimensions W x H x D	(cm)	98 x 185 x 84	61 x 187 x 60	61 x 186 x 63	61 x 186 x 64
Type and configuration					
Fully integrated / integrated / under-counter / free-standing		–/•/–/•	•/–/–/–	•/–/–/–	•/–/–/–
Door hinge right / left / reversible		•/•/–	•/–/•	•/–/•	•/–/•
Full panelling / door panelling		•/•	–/–	–/–	–/–
Volume / consumption data					
Cooling / fresh cooling / fresh cooling zone close to 0 °C / freezing / wine		•/–/•/•/–	•/–/•/•/–	•/–/–/•/–	•/–/•/•/–
Total gross volume / total net volume	(l)	657/517	273/251	287/264	299/289
– Net volume of cooling	(l)	320	132	189	183
– Net volume of fresh cooling zone close to 0 °C / fresh cooling	(l)	19	57	–	78
– Net volume of freezing	(l)	178	62	75	28
Energy efficiency class[2]		A+	A++	A++	A++
Daily energy consumption DIN EN 153[3]	(kWh/24h)	1,317	0.683	0.657	0.632
Annual energy consumption DIN EN 153[3]	(kWh)	481	250	240	231
Daily energy consumption per 100 l of net volume[3]	(kWh)	0.26	0.27	0.25	0.22
Noise level	(dB (re 1pW))	44	39	39	39
Climate class		SN – T	SN – T	SN – T	SN – ST
Features					
Ice and water dispenser with ice cubes / crushed ice / water		•/•/•	–/–/–	–/–/–	–/–/–
Fresh cooling zones with humidity control	(Anzahl)	–	1	–	1
Cooling zones with humidity control	(Anzahl)	1	–	–	–
Temperature / climate zones	(Anzahl)	4	4	2	4
Temperature display internal / external		–/•	•/–	•/–	•/–
Temperature adjustable to the precise degree		•	•	•	•
No-Frost technology		•	•	•	–
Automatic defrosting: cooling / fresh cooling / freezing		•/–/•	•/•/•	•/–/•	•/•/–
Antimicrobial activated charcoal air filter		•	•	–	•
Vacation mode		•	–	–	–
Malfunction, visual / audible warning signal		•/•	•/•	•/•	•/•
Door open, visual / audible warning signal or door lock indication		•/•	•/•	•/•	•/•
Cooling / fresh cooling					
Fast cooling		•	•	•	–
Dynamic cold air distribution		•	•	•	•
Levels in the interior	(Anzahl)	6	5	6	8
Containers / drawers in the interior	(Anzahl)	2	2	1	2
Door racks	(Anzahl)	6	2	3	4
Wine and champagne rack		•	•	•	•
GN insert		•	•	•	•
Glass tray		•	•	•	•
Egg racks	(Anzahl Eier)	18	14	14	14
Freezing					
Fast freezing		•	•	•	•
Freezing capacity	(kg/24h)	12	12	15	2
Storage time after a malfunction	(Std.)	7	16	16	14
Interior compartments	(Anzahl)	4	–	–	2
Baskets, containers, drawers in the interior	(Anzahl)	2	2	3	–
Door racks	(Anzahl)	3	–	–	–
Ice cub trays	(Anzahl)	1	1	1	1
Ice packs	(Anzahl)	2	2	2	–
Connection					
Total connected load	(kW)	0.3	0.12	0.12	0.12
Water connection inlet		•	–	–	–

• Standard. – Not available. ◦ Special accessory.

[1] Values according to EU regulation 1060/2010.

[2] Effective consumption depends on the use/location of appliance.

AjMadison Your Appliance Authority™ 800-570-3355

Fridge-freezer combination	Cooler	Refridgerator	Fridge-freezer combination	Cooler	Cooler	Refridgerator
RT 287 202	RC 289 202	RF 287 202	RT 249 202	RC 249 202	RC 247 202	RF 247 202
55.6 x 177.2 x 54.5	55.6 x 177.2 x 54.5	55.6 x 177.2 x 54.5	55.6 x 139.7 x 54.5	55.6 x 139.7 x 54.5	55.6 x 139.7 x 54.5	55.6 x 139.7 x 54.5
56 x 177.5 x 55	56 x 177.5 x 55	56 x 177.5 x 55	56 x 140 x 55	56 x 140 x 55	56 x 140 x 55	56 x 140 x 55
55	55	55	55	55	55	55
65	68	59	59	58	57	60
70	74	65	63	63	62	65
61 x 186 x 65	61 x 185 x 63	65 x 198 x 65	61 x 149 x 63	61 x 147 x 64	58 x 146 x 62	58 x 146 x 62
•/–/–/–	•/–/–/–	•/–/–/–	•/–/–/–	•/–/–/–	•/–/–/–	•/–/–/–
•/–/•	•/–/•	–/•/•	•/–/•	•/–/•	•/–/•	–/•/•
–/–	–/–	–/–	–/–	–/–	–/–	–/–
•/–/–/•/–	•/–/•/–/–	–/–/–/•/–	•/–/•/•/–	•/–/•/–/–	•/–/–/–/–	–/–/–/•/–
307/302	320/306	237/213	224/214	244/233	265/258	181/160
274	228	–	129	176	258	–
–	78	–	57	57	–	–
28	–	213	28	–	–	160
A++	A++	A++	A++	A++	A++	A++
0.572	0.363	0.668	0.557	0.34	0.298	0.572
209	133	244	204	125	109	209
0.19	0.12	0.31	0.26	0.15	0.12	0.36
39	39	40	39	39	39	40
SN – T	SN – T	SN – T	SN – ST	SN – T	SN – T	SN – T
–/–/–	–/–/–	–/–/–	–/–/–	–/–/–	–/–/–	–/–/–
–	1	–	1	1	–	–
–	–	–	–	–	–	–
3	3	1	4	3	1	1
•/–	•/–	•/–	•/–	•/–	•/–	•/–
•	•	•	•	•	•	•
–	–	•	–	–	–	•
•/–/–	•/•/–	–/–/•	•/•/–	•/•/–	•/–/–	–/–/•
–	•	–	•	•	–	–
–	–	–	–	–	–	–
•/•	•/•	•/•	•/•	•/•	•/•	•/•
•/•	•/•	•/•	•/•	•/•	•/•	•/•
–	•	–	–	•	•	–
•	•	–	•	•	•	–
5	8	–	5	7	7	–
6	3	–	3	2	2	–
4	3	–	4	3	3	–
•	•	–	•	•	•	–
•	•	–	•	•	•	–
•	•	–	•	•	•	–
14	14	–	14	14	14	–
•	–	•	•	–	–	•
2	–	25	2	–	–	25
14	–	11	14	–	–	11
2	–	5	2	–	–	7
–	–	4	–	–	–	5
–	–	–	–	–	–	–
1	–	1	1	–	–	1
–	–	2	–	–	–	2
0.12	0.12	0.12	0.12	0.12	0.12	0.12
–	–	–	–	–	–	–

AjMadison
Your Appliance Authority™
800-570-3355

Other cooling appliances.

Appliance type		Fridge-freezer combination	Fridge-freezer combination	Cooler
Fully integrated / integrated			RB 282 203[4]	
Fully integrated, aluminium-coloured innerliner				RC 282 203[3]
Stainless steel glass door		RB 292 311[3]		
Dimensions				
Appliance dimensions W x H x D	(cm)	70 x 200 x 62.5	55.6 x 177.2 x 54.5	55.6 x 177.2 x 54.5
Niche dimensions W x H x D	(cm)	–	56 x 177.5 x 55	56 x 177.5 x 55
Depth including wall clearance	(cm)	62.5+2	55	55
Weight when empty	(kg)	118	67	59
Shipping weight	(kg)	120	73	65
Transport package dimensions W x H x D	(cm)	75 x 205 x 71	62 x 184 x 62	61.5 x 186 x 63
Type and configuration				
Fully integrated / integrated / under-counter / free-standing		–/–/–/•	•/–/–/–	•/–/–/–
Door hinge right / left / reversible		•/–/•	•/–/•	•/–/•
Full panelling / door panelling		•/–	–/–	–/–
Volume / consumption data				
Cooling / fresh cooling / fresh cooling zone close to 0 °C / freezing / wine		•/•/–/•/–	•/•/–/•/–	•/•/–/–/–
Total gross volume / total net volume	(l)	440/389	276/272	321/319
– Net volume of cooling	(l)	261	221	321
– Net volume of fresh cooling zone close to 0 °C / fresh cooling	(l)	46	21	28
– Net volume of freezing	(l)	82	61	–
Energy efficiency class[2]		A++	A++	A++
Daily energy consumption DIN EN 153[3]	(kWh/24h)	0.77	0.619	0.317
Annual energy consumption DIN EN 153[3]	(kWh)	281	226	116
Daily energy consumption per 100 l of net volume[3]	(kWh)	0.2	0.23	0.1
Noise level	(dB (re 1pW))	43	37	37
Climate class		SN – T	SN – T	SN – T
Features				
Ice and water dispenser with ice cubes / crushed ice / water		–/–/–	–/–/–	–/–/–
Fresh cooling zones with humidity control	(no.)	1	•	•
Cooling zones with humidity control	(no.)	–	–	–
Temperature / climate zones	(no.)	4	3	1
Temperature display internal / external		•/–	•/–	•/–
Temperature adjustable to the precise degree		•	•	•
No-Frost technology		•	–	–
Automatic defrosting: cooling / fresh cooling / freezing		•/•/•	•/–/–	•/–/–
Defrost assistance freezing			•	–
Antimicrobial activated charcoal air filter		•	–	•
Vacation mode		–	•	–
Malfunction, visual / audible warning signal		•/•	•/•	–/–
Door open, visual / audible warning signal or door lock indication		•/•	•/•	–/•
Cooling / fresh cooling				
Fast cooling		•	•	•
Dynamic cold air distribution		•	–	•
Levels in the interior	(no.)	4	5	7
Containers / drawers in the interior	(no.)	2	2	2
Door racks	(no.)	6	5	6
Wine and champagne rack		•	•	•
Glass tray		–	–	–
Egg racks	(no. of eggs)	14	14	14
Freezing				
Fast freezing		•	•	–
Freezing capacity	(kg/24h)	18	11	–
Storage time after a malfunction	(Std.)	16	26	–
Interior compartments	(no.)	–	1	–
Baskets, containers, drawers in the interior	(no.)	4	2	–
Ice cub trays	(no.)	1	1	–
Ice packs	(no.)	2	–	–
Connection				
Total connected load	(kW)	0.15	0.09	0.09
Water connection inlet		–	–	–

• Standard. – Not available. ◦ Special accessory.

[1] Values according to EU regulation 1060/2010.

[2] Effective consumption depends on the use/location of appliance.

[3] Available 2. quarter 2013.

[4] Available 1. quarter 2013.

AjMadison
Your Appliance Authority™
800-570-3355

AjMadison
Your Appliance Authority™
800-570-3355

Appliance type		Fridge-freezer combination	Cooler
Fully integrated / integrated		RT 242 202	RC 242 202
Fully integrated, aluminium-coloured innerliner			
Dimensions			
Appliance dimensions W x H x D	(cm)	53.8 x 139.8 x 53.3	53.8 x 139.8 x 53.3
Niche dimensions W x H x D	(cm)	56 x 140 x 55	56 x 140 x 55
Depth including wall clearance	(cm)	55	55
Weight when empty	(kg)	59	59
Shipping weight	(kg)	63	63
Transport package dimensions W x H x D	(cm)	61 x 147 x 63	61 x 147 x 64
Type and configuration			
Fully integrated / integrated / under-counter / free-standing		•/–/–/–	•/–/–/–
Door hinge right / left / reversible		•/–/•	•/–/•
Volume / consumption data			
Cooling / fresh cooling / fresh cooling zone close to 0 °C / freezing / wine		•/–/•/•/–	•/–/•/–/–
Total gross volume / total net volume	(l)	212/211	232/230
– Net volume of cooling	(l)	134	170
– Net volume of fresh cooling zone close to 0 °C / fresh cooling	(l)	60	60
– Net volume of freezing	(l)	17	–
Energy efficiency class[1]		A++	A+
Daily energy consumption DIN EN 153[2]	(kWh/24h)	0.546	0.446
Annual energy consumption DIN EN 153[2]	(kWh)	200	163
Daily energy consumption per 100 l of net volume[2]	(kWh)	0.26	0.19
Noise level	(dB (re 1pW))	36	37
Climate class		SN – ST	SN – ST
Features			
Ice and water dispenser with clear ice / ice cubes / crushed ice / water		–/–/–	–/–/–
Fresh cooling zones with humidity control	(no.)	1	1
Temperature / climate zones	(no.)	4	3
Temperature display internal / external		•/–	•/–
Temperature adjustable to the precise degree		•	•
Automatic defrosting: cooling / fresh cooling / freezing		•/•/–	•/•/–
Defrost assistance freezing		–	–
Antimicrobial activated charcoal air filter		–	–
Malfunction, visual / audible warning signal		–/–	–/–
Door open, visual / audible warning signal or door lock indication		•/–	–/–
Cooling / fresh cooling			
Fast cooling		•	–
Dynamic cold air distribution		•	•
Levels in the interior	(no.)	4	5
Containers / drawers in the interior	(no.)	4	4
Door racks	(no.)	5	5
Wine and champagne rack		•	•
Glass tray		•	•
Egg racks	(No. of eggs)	14	14
Freezing			
Fast freezing		•	–
Freezing capacity	(kg/24h)	2	–
Storage time after a malfunction	(hrs.)	12	–
Interior compartments	(no.)	1	–
Baskets, containers, drawers in the interior	(no.)	–	–
Ice cube trays	(no.)	1	–
Ice packs	(no.)	–	–
Connection			
Total connected load	(kW)	0.09	0.09

• Standard. – Not available. ◦ Special accessory.

[1] Values according to EU regulation 1060/2010.

[2] Effective consumption depends on the use/location of appliance.

AjMadison Your Appliance Authority™ 800-570-3355

Fridge-freezer combination	Cooler	Fridge-freezer combination	Cooler	Freezer
RT 220 202	RC 220 202	RT 200 202	RC 200 202	RF 200 202
54.1 x 122.1 x 54.2	54.1 x 122.1 x 54.2	59.8 x 82 x 54.8	59.8 x 82 x 54.8	59.8 x 82 x 54.8
56 x 122.5 x 55	56 x 122.5 x 55	60 x 82 x 55	60 x 82 x 55	60 x 82 x 55
55	55	55	55	55
48	48	35	35	35
52	52	37	37	38
61 x 129 x 63	60 x 130 x 64	66 x 90 x 62	66 x 90 x 62	66 x 90 x 62
•/–/–/–	•/–/–/–	–/–/•/–	–/–/•/–	–/–/•/–
•/–/•	•/–/•	•/–/•	•/–/•	•/–/•
•/–/–/•/–	•/–/–/–/–	•/–/–/•/–	•/–/–/–/–	–/–/–/•/–
211/206	228/226	131/125	142/141	114/98
189	226	110	141	–
–	–	–	–	–
17	–	15	–	98
A++	A+	A++	A++	A+
0.482	0.378	0.381	0.252	0.528
176	138	140	92	193
0.23	0.17	0.3	0.18	0.54
37	34	38	38	38
SN – ST	SN – ST	SN – ST	SN – ST	SN – ST
–/–/–	–/–/–	–/–/–	–/–/–	–/–/–
–	–	–	–	–
2	1	2	1	1
•/–	•/–	–/–	–/–	•/–
•	•	–	–	–
•/–/–	•/–/–	•/–/–	•/–/–	•/–/–
–	–	–	–	–
–	–	–	–	–
–/–	–/–	–/–	–/–	•/•
–/–	–/–	–/–	–/–	–/–
–	–	–	–	–
•	•	•	•	–
5	6	3	4	–
1	1	1	1	–
5	5	5	5	–
•	•	–	–	–
•	•	–	–	–
14	14	7	7	–
•	–	•	–	•
2	–	2	–	12
12	–	12	–	24
1	–	1	–	–
–	–	–	–	3
1	–	1	–	1
–	–	–	–	1
0.09	0.09	0.09	0.09	0.09

AjMadison
Your Appliance Authority™
800-570-3355

AJMadison
Your Appliance Authority
800-570-3355

Dishwashers / Washing machine / Condenser dryer.

Vario dishwashers. 318

Power dishwashers. 324

Planning notes. 330

Accessories / Special accessories. 338

Technical specifications. 340

Washing machine. 342

Condenser dryer. 343

Technical specifications. 344

AjMadison
Your Appliance Authority™
800-570-3355

DF 460 163▼
fully integrated
Height 81.5 cm

DF 461 163▼
fully integrated
Height 86.5 cm

▼ Available 2. quarter 2013

Included in the price

1 baking tray spray head
1 GN container insert

Installation accessories

DA 020 010
Stainless steel trim kit for 81.5 cm high dishwashers

DA 020 110
Stainless steel trim kit for 86.5 cm high dishwashers

DA 021 000
Hinge for all fully integrated diswashers

DA 231 000
Full glass door in Gaggenau Anthracite for 81.5 cm high dishwashers

DA 231 010
Stainless steel-backed full glass door for 81.5 cm high dishwashers

DA 231 100
Full glass door in Gaggenau Anthracite for 86.5 cm dishwashers

DA 231 110
Stainless steel-backed full glass door for 86.5 cm dishwashers

GH 045 010
Handle bar with 2 mounts, stainless steel, Length 45 cm, drilling distance 427 mm

GZ 010 011
Aqua stop extension (2 m long) for all dishwashers

Special accessories

DA 041 061
Vario drawer incl. pull-out rails (14 place setting)

DA 042 030
Silvercare cartridge for all dishwashers

DA 043 060
Glass basket for 60 cm wide dishwashers

Dishwasher
DF 460/DF 461

- Vario dishwasher with 4 options, individually selectable:
  - Clean and dry dishes in 57 minutes
  - Intensive cleaning in the whole of the lower basket and glass care in the upper basket at the same time
  - Enhanced drying performance
  - Maximum energy saving
- Six programmes with Aqua sensor
- Flex Plus basket system, extra-extendable and smooth running
- Remaining time projection onto the kitchen floor
- Glasscare Plus technology
- Bright interior light
- Very quiet: 42 dB
- Energy efficiency class A+++
- Aqua stop with guarantee

Handling

Touch key operation.
Display with time remaining indicator.
Electronic refill indicator for salt and rinsing agent.
Inflow water indicator.
Bright interior light.
End of programme indicator.
Time delay up to 24 hours.

Technical Features

Remaining time projection.
Glasscare Plus technology.
Aqua sensor.
Load sensor.
Aqua stop with guarantee.
Dosage Assist.
Automatic detergent function.
Regeneration electronics.
Heat exchanger.
Low temperature drying with Zeolite.
Continuous flow heater.
Soft lock.
Triple filter system, self-cleaning.
Child lock.

Programmes

6 programmes:
Auto 65 °C – 75 °C.
Auto 45 °C – 65 °C.
Auto 35 °C – 45 °C.
Standard Eco 50 °C.
Quick wash 45 °C (29 min.).
Pre-rinse.

4 options:
Power.
Intensive.
Extra Dry.
Energy Save.

Features

Flex Plus upper basket:
Extra-extendable.
Smooth running.
Rackmatic with 3 levels, adjustable in height up to 5 cm.
6 folding spines.
4 folding racks.
2 glass support bars.

Flex Plus lower basket:
Dividable glass support.
6 folding spines.
2 folding racks.
Cutlery basket.

Maximum dish sizes (upper/lower basket) for 81.5 cm high dishwashers: 27/25, 24.5/27.5 or 22/30 cm respectively.

Maximum dish sizes (upper/lower basket) for 86.5 cm high dishwashers: 29/28, 26.5/30.5 or 24/33 cm respectively.

13 place setting capacity.
Maximum glass loading capacity 23 wine glasses.

Consumption data

Energy efficiency class A+++.
From 10 l water.
From 0.8 kwh.
Noise level 42 dB (re 1 pW).

Planning notes

Height-adjustable feet.
Appliance plinth recess 100 mm (see drawing).
To display the remaining time projection, a minimum plinth protrusion must be present (40 mm + thickness of the furniture front).
The maximum plinth height must be reduced by 30 mm to provide an optimal display of the remaining time projection.
Rear feet adjustable at front.
Door weight up to 8.5/10 kg.
Door panel dimension dependent on plinth height of kitchen furniture.
Installation possible in tall unit. For installation into a tall unit, ventilation openings are provided (min. 200 cm²).

Please read additional planning notes on page 330–337.

Connection

Total connected load 2.3 kW.
Connecting cable pluggable.
Water connection with 3/4" screw joint.
Connection to hot or cold water possible.

AJMadison
Your Appliance Authority™
800-570-3355

86.5 cm high dishwasher

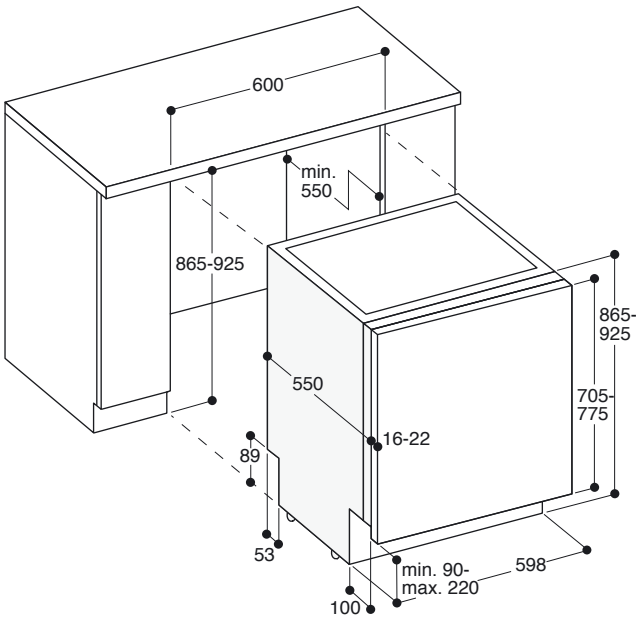

81.5 cm high dishwasher

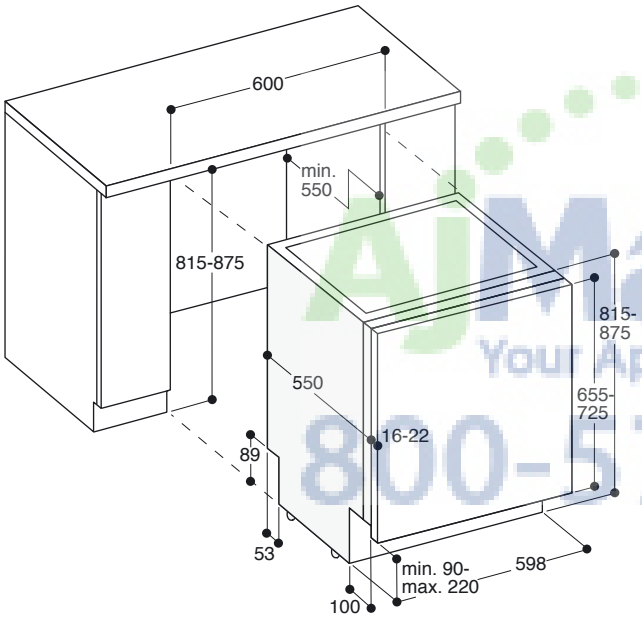

AjMadison
Your Appliance Authority™
800-570-3355

Connection dimensions for a 60 cm wide dishwasher

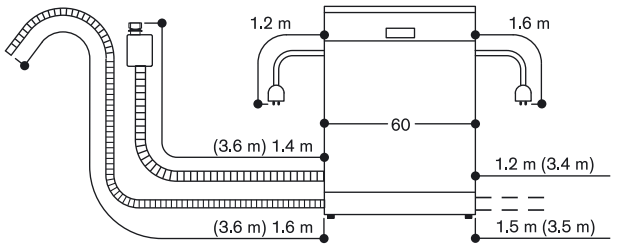

( ) values with extension kit

DF 460 162F
fully integrated
with flexible hinge
Height 81.5 cm

DF 461 162F
fully integrated
with flexible hinge
Height 86.5 cm

Included in the price
1 baking tray spray head
1 GN container insert

Installation accessories
DA 020 010
Stainless steel trim kit for 81.5 cm high dishwashers

DA 020 110
Stainless steel trim kit for 86.5 cm high dishwashers

GH 045 010
Handle bar with 2 mounts, stainless steel, Length 45 cm, drilling distance 427 mm

GZ 010 011
Aqua stop extension (2 m long) for all dishwashers

Special accessories
DA 041 061
Vario drawer incl. pull-out rails (14 place setting)

DA 042 030
Silvercare cartridge for all dishwashers

DA 043 060
Glass basket for 60 cm wide dishwashers

Dishwasher
DF 460/DF 461

- Vario dishwasher with 4 options, individually selectable:
  - Clean and dry dishes in 57 minutes
  - Intensive cleaning in the whole of the lower basket and glass care in the upper basket at the same time
  - Enhanced drying performance
  - Maximum energy saving
- Six programmes with Aqua sensor
- Flex Plus basket system, extra-extendable and smooth running
- Glasscare Plus technology
- Bright interior light
- Very quiet: 42 dB
- Energy efficiency class A+++
- Aqua stop with guarantee

Handling
Touch key operation.
Display with time remaining indicator.
Electronic refill indicator for salt and rinsing agent.
Inflow water indicator.
Bright interior light.
End of programme indicator.
Time delay up to 24 hours.

Technical Features
Info-Light.
Glasscare Plus technology.
Aqua sensor.
Load sensor.
Aqua stop with guarantee.
Dosage Assist.
Automatic detergent function.
Regeneration electronics.
Heat exchanger.
Low temperature drying with Zeolite.
Continuous flow heater.
Soft lock.
Triple filter system, self-cleaning.
Child lock.

Programmes
6 programmes:
Auto 65 °C – 75 °C.
Auto 45 °C – 65 °C.
Auto 35 °C – 45 °C.
Standard Eco 50 °C.
Quick wash 45 °C (29 min.).
Pre-rinse.

4 options:
Power.
Intensive.
Extra Dry.
Energy Save.

Features
Flex Plus upper basket:
Extra-extendable.
Smooth running.
Rackmatic with 3 levels, adjustable in height up to 5 cm.
6 folding spines.
4 folding racks.
2 glass support bars.

Flex Plus lower basket:
Dividable glass support.
6 folding spines.
2 folding racks.
Cutlery basket.

Maximum dish sizes (upper/lower basket) for 81.5 cm high dishwashers: 27/25, 24.5/27.5 or 22/30 cm respectively.

Maximum dish sizes (upper/lower basket) for 86.5 cm high dishwashers: 29/28, 26.5/30.5 or 24/33 cm respectively.

13 place setting capacity.
Maximum glass loading capacity 23 wine glasses.

Consumption data
Energy efficiency class A+++.
From 10 l water.
From 0.8 kwh.
Noise level 42 dB (re 1 pW).

Planning notes
Height-adjustable feet.
Appliance plinth recess 100 mm (see drawing).
Rear feet adjustable at front.
Door weight up to 8.5/10 kg.
Door panel dimension dependent on plinth height of kitchen furniture.
Installation possible in tall unit. For installation into a tall unit, ventilation openings are provided (min. 200 cm²).

Please read additional planning notes, also concerning flexible hinge, on page 330–337.

Connection
Total connected load 2.3 kW.
Connecting cable pluggable.
Water connection with 3/4" screw joint.
Connection to hot or cold water possible.

AMadison
Your Appliance Authority™
800-570-3355

81,5 cm hohe Geschirrspüler mit flexiblem Scharnier

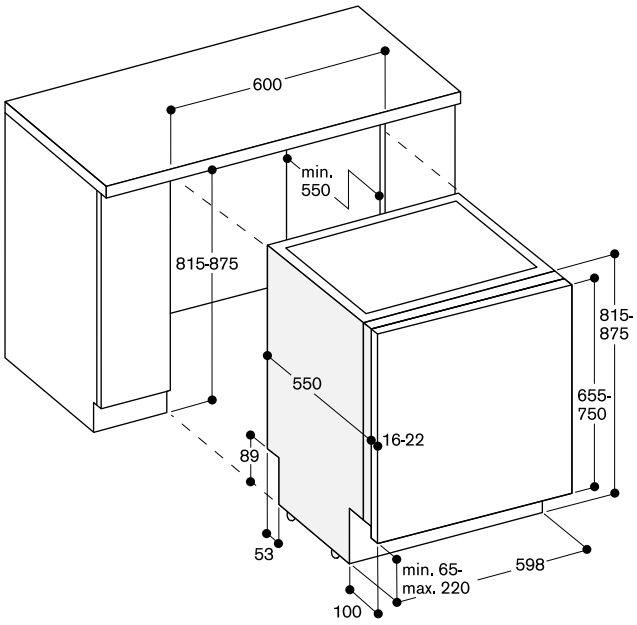

86,5 cm hohe Geschirrspüler mit flexiblem Scharnier

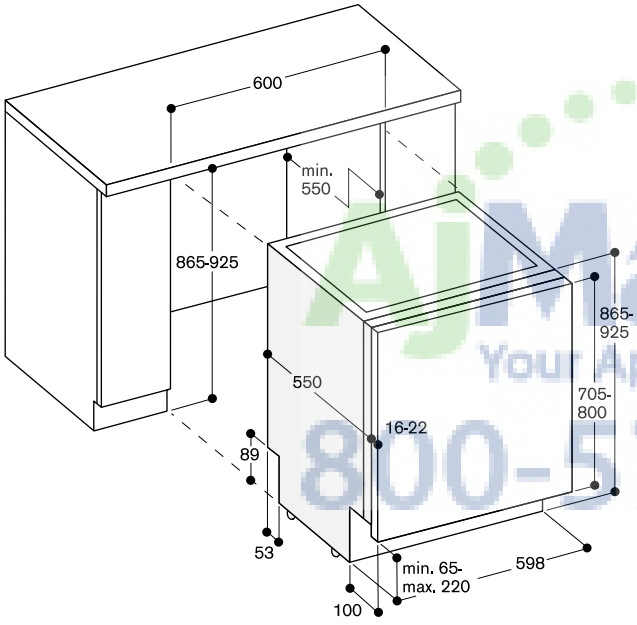

AjMadison
Your Appliance Authority™
800-570-3355

Anschlussmaße für 60 cm breite Geschirrspüler

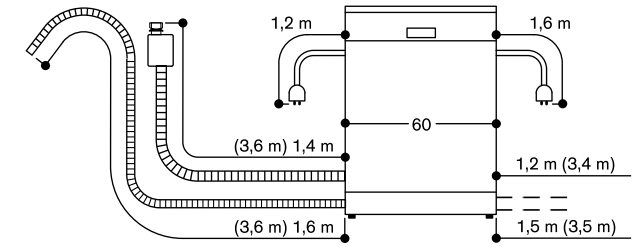

( ) Werte mit Verlängerungssatz

DI 460 113▾
integrated
Stainless steel panel
Height 81.5 cm

DI 460 133▾
integrated
Aluminium panel
Height 81.5 cm

DI 461 113▾
integrated
Stainless steel panel
Height 86.5 cm

DI 461 133▾
integrated
Aluminium panel
Height 86.5 cm

▾ Available 2. quarter 2013

Included in the price
1 baking tray spray head
1 GN container insert

Installation accessories
DA 020 010
Stainless steel trim kit for 81.5 cm high dishwashers
DA 020 110
Stainless steel trim kit for 86.5 cm high dishwashers
GZ 010 011
Aqua stop extension (2 m long) for all dishwashers

Special accessories
DA 041 061
Vario drawer incl. pull-out rails (14 place setting)
DA 042 030
Silvercare cartridge for all dishwashers
DA 043 060
Glass basket for 60 cm wide dishwashers

Dishwasher
DI 460/DI 461

- Vario dishwasher with 4 options, individually selectable:
  - Clean and dry dishes in 57 minutes
  - Intensive cleaning in the whole of the lower basket and glass care in the upper basket at the same time
  - Enhanced drying performance
  - Maximum energy saving
- Six programmes with Aqua sensor
- Flex Plus basket system, extra-extendable and smooth running
- Glasscare Plus technology
- Bright interior light
- Very quiet: 42 dB
- Energy efficiency class A+++
- Aqua stop with guarantee

Handling
Front TFT display.
Touch key operation.
LED display on top.
Electronic refill indicator for salt and rinsing agent.
Inflow water indicator.
Bright interior light.
End of programme indicator.
Time delay up to 24 hours.

Technical Features
Glasscare Plus technology.
Aqua sensor.
Load sensor.
Aqua stop with guarantee.
Dosage Assist.
Automatic detergent function.
Regeneration electronics.
Heat exchanger.
Low temperature drying with Zeolite.
Continuous flow heater.
Soft lock.
Triple filter system, self-cleaning.
Child lock.

Programmes
6 programmes:
Auto 65 °C – 75 °C.
Auto 45 °C – 65 °C.
Auto 35 °C – 45 °C.
Standard Eco 50 °C.
Quick wash 45 °C (29 min.).
Pre-rinse.

4 options:
Power.
Intensive.
Extra Dry.
Energy Save.

Features
Flex Plus upper basket:
Extra-extendable.
Smooth running.
Rackmatic with 3 levels, adjustable in height up to 5 cm.
6 folding spines.
4 folding racks.
2 glass support bars.

Flex Plus lower basket:
Dividable glass support.
6 folding spines.
2 folding racks.
Cutlery basket.

Maximum dish sizes (upper/lower basket) for 81.5 cm high dishwashers: 27/25, 24.5/27.5 or 22/30 cm respectively.

Maximum dish sizes (upper/lower basket) for 86.5 cm high dishwashers: 29/28, 26.5/30.5 or 24/33 cm respectively.

13 place setting capacity.
Maximum glass loading capacity 23 wine glasses.

Consumption data
Energy efficiency class A+++.
From 10 l water.
From 0.8 kwh.
Noise level 42 dB (re 1 pW).

Planning notes
Height-adjustable feet.
Appliance plinth recess 100 mm (see drawing).
Rear feet adjustable at front.
Door weight up to 8.5 kg.
Door panel dimension dependent on plinth height of kitchen furniture.
Installation possible in tall unit. For installation into a tall unit, ventilation openings are provided (min. 200 cm²).

Please read additional planning notes on page 330–337.

Connection
Total connected load 2.3 kW.
Connecting cable pluggable.
Water connection with 3/4" screw joint.
Connection to hot or cold water possible.

AMadison Your Appliance Authority™ 800-570-3355

81.5 cm high dishwasher

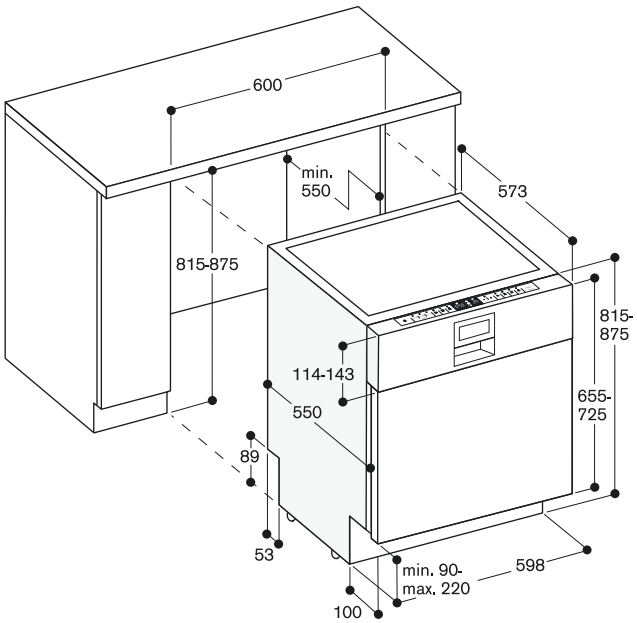

86.5 cm high dishwasher

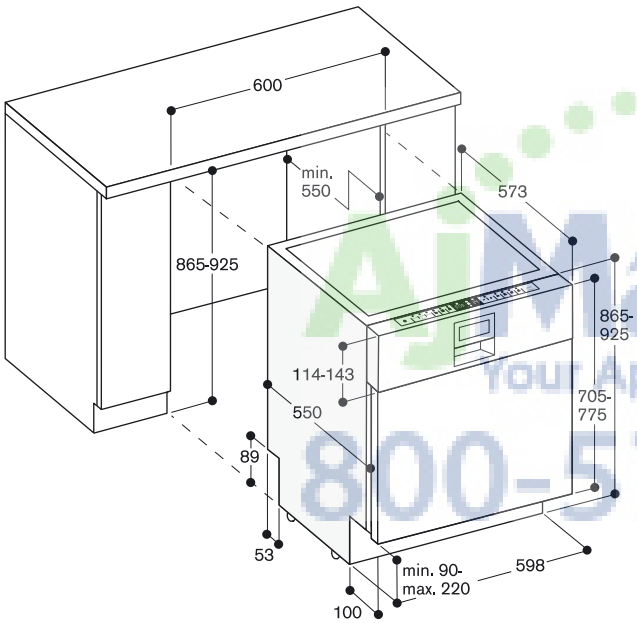

AjMadison
Your Appliance Authority™
800-570-3355

Connection dimensions for a 60 cm wide dishwasher

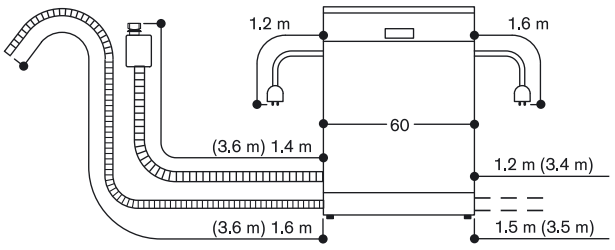

( ) values with extension kit

DF 260 162▼
fully integrated
Height 81.5 cm

DF 261 162▼
fully integrated
Height 86.5 cm

▼ Available 2. quarter 2013

Included in the price
1 baking tray spray head

Installation accessories

DA 020 010
Stainless steel trim kit for 81.5 cm high dishwashers

DA 020 110
Stainless steel trim kit for 86.5 cm high dishwashers

DA 021 000
Hinge for all fully integrated diswashers

DA 231 000
Full glass door in Gaggenau Anthracite for 81.5 cm high dishwashers

DA 231 010
Stainless steel-backed full glass door for 81.5 cm high dishwashers

DA 231 100
Full glass door in Gaggenau Anthracite for 86.5 cm dishwashers

DA 231 110
Stainless steel-backed full glass door for 86.5 cm dishwashers

GH 045 010
Handle bar with 2 mounts, stainless steel, Length 45 cm, drilling distance 427 mm

GZ 010 011
Aqua stop extension (2 m long) for all dishwashers

Special accessories

DA 041 061
Vario drawer incl. pull-out rails (14 place setting)

DA 042 030
Silvercare cartridge for all dishwashers

DA 043 060
Glass basket for 60 cm wide dishwashers

DA 044 000
Holder for Gastronorm inserts for 60 cm wide dishwashers

Dishwasher
DF 260/DF 261

- Power dishwasher: dishes clean and dry in 59 minutes
- Six programmes with Aqua sensor and two options
- Flex Plus basket system, extra-extendable and smooth running
- Remaining time projection onto the kitchen floor
- Glasscare technology
- Very quiet: 42 dB
- Energy efficiency class A++
- Aqua stop with guarantee

Handling
Touch key operation.
Display with time remaining indicator.
Electronic refill indicator for salt and rinsing agent.
Inflow water indicator.
End of programme indicator.
Time delay up to 24 hours.

Technical Features
Remaining time projection.
Glasscare technology.
Aqua sensor.
Load sensor.
Aqua stop with guarantee.
Dosage Assist.
Automatic detergent function.
Regeneration electronics.
Heat exchanger.
Continuous flow heater.
Soft lock.
Triple filter system, self-cleaning.
Child lock.

Programmes
6 programmes:
Auto 65 °C – 75 °C.
Auto 45 °C – 65 °C.
Auto 35 °C – 45 °C.
Standard Eco 50 °C.
Quick wash 45 °C (29 min.).
Pre-rinse.

2 Options:
Power.
Intensive.

Features
Flex Plus upper basket:
Extra-extendable.
Smooth running.
Rackmatic with 3 levels, adjustable in height up to 5 cm.
6 folding spines.
4 folding racks.
2 glass support bars.

Flex Plus lower basket:
Dividable glass support.
6 folding spines.
2 folding racks.
Cutlery basket.

Maximum dish sizes (upper/lower basket) for 81.5 cm high dishwashers: 27/25, 24.5/27.5 or 22/30 cm respectively.

Maximum dish sizes (upper/lower basket) for 86.5 cm high dishwashers: 29/28, 26.5/30.5 or 24/33 cm respectively.

13 place setting capacity.
Maximum glass loading capacity 23 wine glasses.

Consumption data
Energy efficiency class A++.
From 10 l water.
From 0.92 kwh.
Noise level 42 dB (re 1 pW).

Planning notes
Height-adjustable feet.
Appliance plinth recess 100 mm (see drawing).
To display the remaining time projection, a minimum plinth protrusion must be present (40 mm + thickness of the furniture front).
The maximum plinth height must be reduced by 30 mm to provide an optimal display of the remaining time projection.
Rear feet adjustable at front.
Door weight up to 8.5/10 kg.
Door panel dimension dependent on plinth height of kitchen furniture.
Installation possible in tall unit. For installation into a tall unit, ventilation openings are provided (min. 200 cm²).

Please read additional planning notes on page 330–337.

Connection
Total connected load 2.3 kW.
Connecting cable pluggable.
Water connection with 3/4" screw joint.
Connection to hot or cold water possible.

A Madison Your Appliance Authority™
800-570-3355

81.5 cm high dishwasher

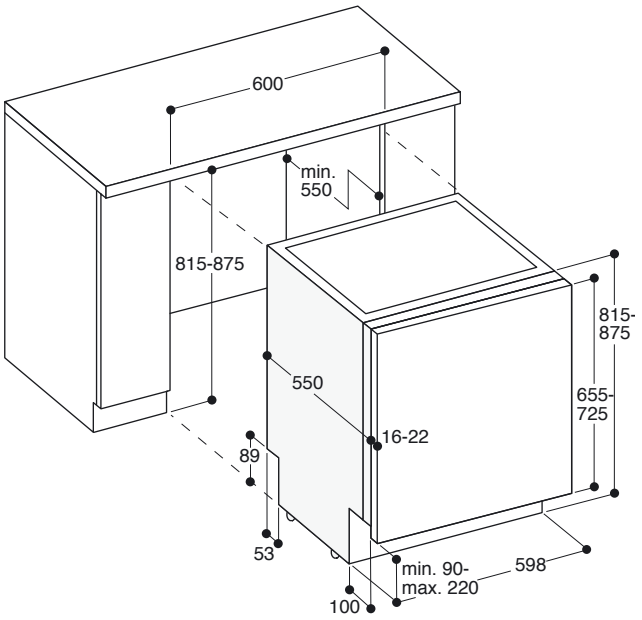

86.5 cm high dishwasher

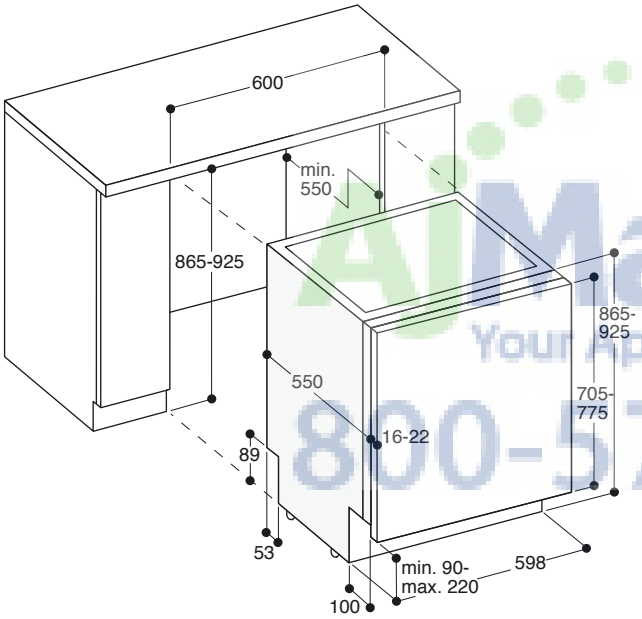

AJMadison
Your Appliance Authority™
800-570-3355

Connection dimensions for a 60 cm wide dishwasher

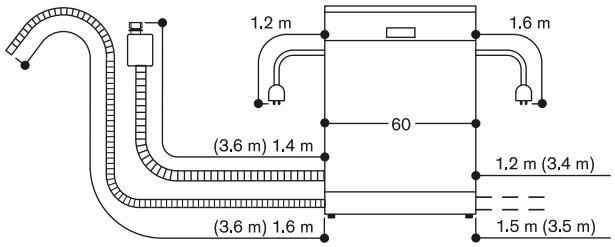

( ) values with extension kit

DF 260 161F
fully integrated
with flexible hinge
Height 81.5 cm

DF 261 161F
fully integrated
with flexible hinge
Height 86.5 cm

Included in the price
1 baking tray spray head

Installation accessories
DA 020 010
Stainless steel trim kit for 81.5 cm high dishwashers

DA 020 110
Stainless steel trim kit for 86.5 cm high dishwashers

GH 045 010
Handle bar with 2 mounts, stainless steel, Length 45 cm, drilling distance 427 mm

GZ 010 011
Aqua stop extension (2 m long) for all dishwashers

Special accessories
DA 041 061
Vario drawer incl. pull-out rails (14 place setting)

DA 042 030
Silvercare cartridge for all dishwashers

DA 043 060
Glass basket for 60 cm wide dishwashers

DA 044 000
Holder for Gastronorm inserts for 60 cm wide dishwashers

Dishwasher
DF 260/DF 261

- Power dishwasher: dishes clean and dry in 59 minutes
- Six programmes with Aqua sensor and two options
- Flex Plus basket system, extra-extendable and smooth running
- Glasscare technology
- Very quiet: 42 dB
- Energy efficiency class A++
- Aqua stop with guarantee

Handling
Touch key operation.
Display with time remaining indicator.
Electronic refill indicator for salt and rinsing agent.
Inflow water indicator.
End of programme indicator.
Time delay up to 24 hours.

Technical Features
Info-Light.
Glasscare technology.
Aqua sensor.
Load sensor.
Aqua stop with guarantee.
Dosage Assist.
Automatic detergent function.
Regeneration electronics.
Heat exchanger.
Continuous flow heater.
Soft lock.
Triple filter system, self-cleaning.
Child lock.

Programmes
6 programmes:
Auto 65 °C – 75 °C.
Auto 45 °C – 65 °C.
Auto 35 °C – 45 °C.
Standard Eco 50 °C.
Quick wash 45 °C (29 min.).
Pre-rinse.

2 Options:
Power.
Intensive.

Features
Flex Plus upper basket:
Extra-extendable.
Smooth running.
Rackmatic with 3 levels, adjustable in height up to 5 cm.
6 folding spines.
4 folding racks.
2 glass support bars.

Flex Plus lower basket:
Dividable glass support.
6 folding spines.
2 folding racks.
Cutlery basket.

Maximum dish sizes (upper/lower basket) for 81.5 cm high dishwashers: 27/25, 24.5/27.5 or 22/30 cm respectively.

Maximum dish sizes (upper/lower basket) for 86.5 cm high dishwashers: 29/28, 26.5/30.5 or 24/33 cm respectively.

13 place setting capacity.
Maximum glass loading capacity 23 wine glasses.

Consumption data
Energy efficiency class A++.
From 10 l water.
From 0.92 kwh.
Noise level 42 dB (re 1 pW).

Planning notes
Height-adjustable feet.
Appliance plinth recess 100 mm (see drawing).
Rear feet adjustable at front.
Door weight up to 8.5/10 kg.
Door panel dimension dependent on plinth height of kitchen furniture.
Installation possible in tall unit. For installation into a tall unit, ventilation openings are provided (min. 200 cm²).

Please read additional planning notes, also concerning flexible hinge, on page 330–337.

Connection
Total connected load 2.3 kW.
Connecting cable pluggable.
Water connection with 3/4" screw joint.
Connection to hot or cold water possible.

AJMadison
Your Appliance Authority™
800-570-3355

81.5 cm high dishwasher with flexible hinge

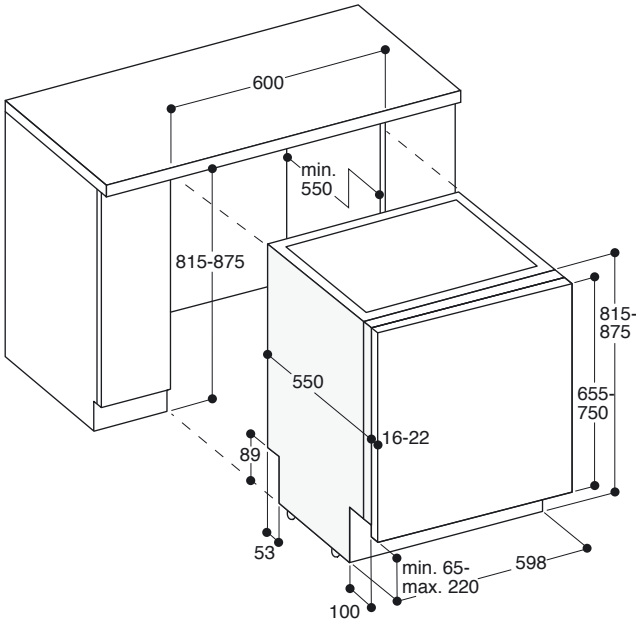

86.5 cm high dishwasher with flexible hinge

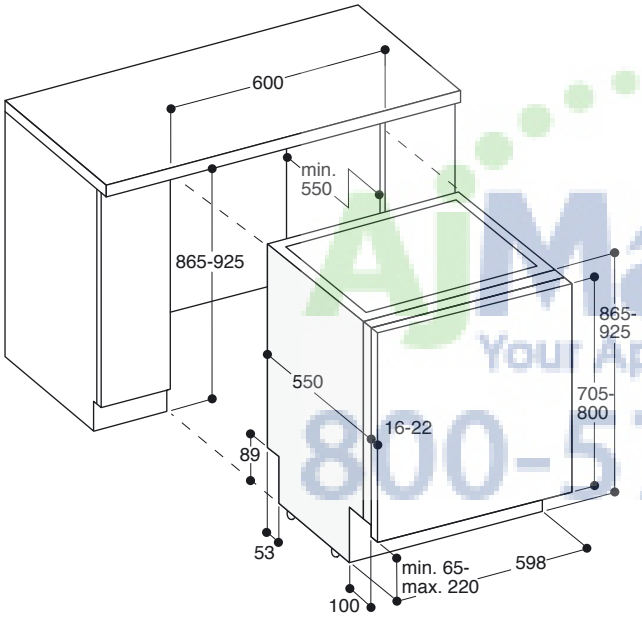

AjMadison
Your Appliance Authority™
800-570-3355

Connection dimensions for a 60 cm wide dishwasher

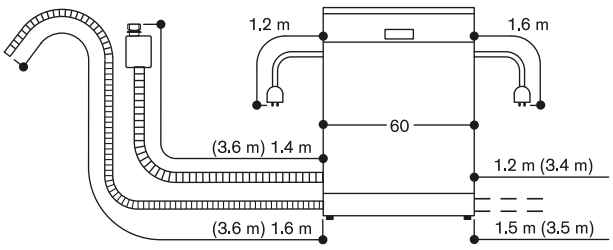

( ) values with extension kit

DF 240 161
fully integrated
Height 81.5 cm

DF 241 161
fully integrated
Height 86.5 cm

Included in the price
1 baking tray spray head

Installation accessories

DA 020 010
Stainless steel trim kit for 81.5 cm high dishwashers

DA 020 110
Stainless steel trim kit for 86.5 cm high dishwashers

DA 021 000
Hinge for all fully integrated diswashers

DA 231 000
Full glass door in Gaggenau Anthracite for 81.5 cm high dishwashers

DA 231 010
Stainless steel-backed full glass door for 81.5 cm high dishwashers

DA 231 100
Full glass door in Gaggenau Anthracite for 86.5 cm dishwashers

DA 231 110
Stainless steel-backed full glass door for 86.5 cm dishwashers

GH 045 010
Handle bar with 2 mounts, stainless steel, Length 45 cm, drilling distance 427 mm

GZ 010 011
Aqua stop extension (2 m long) for all dishwashers

Special accessories

DA 042 030
Silvercare cartridge for all dishwashers

DA 043 060
Glass basket for 60 cm wide dishwashers

DA 044 000
Holder for Gastronorm inserts for 60 cm wide dishwashers

Dishwasher
DF 240/DF 241

- Power dishwasher: dishes clean and dry in 59 minutes
- Four programmes with Aqua sensor and two options
- Glasscare technology
- Very quiet: 44 dB
- Energy efficiency class A++
- Aqua stop with guarantee

Handling
Touch key operation.
Display with time remaining indicator.
Electronic refill indicator for salt and rinsing agent.
Inflow water indicator.
End of programme indicator.
Time delay up to 24 hours.

Technical Features
Info-Light.
Glasscare technology.
Aqua sensor.
Load sensor.
Aqua stop with guarantee.
Dosage Assist.
Automatic detergent function.
Regeneration electronics.
Heat exchanger.
Continuous flow heater.
Soft lock.
Triple filter system, self-cleaning.
Child lock.

Programmes
4 programmes:
Auto 65 °C – 75 °C.
Auto 45 °C – 65 °C.
Standard Eco 50 °C.
Quick wash 45 °C (29 min.).

2 Options:
Power.
Intensive.

Features
Flex upper basket:
Rackmatic with 3 levels, adjustable in height up to 5 cm.
2 folding spines.
2 folding racks.
1 knife rack.

Flex lower basket:
4 folding spines.
2 folding racks.
Cutlery basket.

Maximum dish sizes (upper/lower basket) for 81.5 cm high dishwashers: 27/25, 24.5/27.5 or 22/30 cm respectively.

Maximum dish sizes (upper/lower basket) for 86.5 cm high dishwashers: 29/28, 26.5/30.5 or 24/33 cm respectively.

13 place setting capacity.

Consumption data
Energy efficiency class A++.
From 10 l water.
From 0.92 kwh.
Noise level 44 dB (re 1 pW).

Planning notes
Height-adjustable feet.
Appliance plinth recess 100 mm (see drawing).
Rear feet adjustable at front.
Door weight up to 8.5/10 kg.
Door panel dimension dependent on plinth height of kitchen furniture.
Installation possible in tall unit.
For installation into a tall unit, ventilation openings are provided (min. 200 cm²).

Please read additional planning notes on page 330–337.

Connection
Total connected load 2.3 kW.
Connecting cable plugable.
Water connection with 3/4" screw joint.
Connection to hot or cold water possible.

81.5 cm high dishwasher

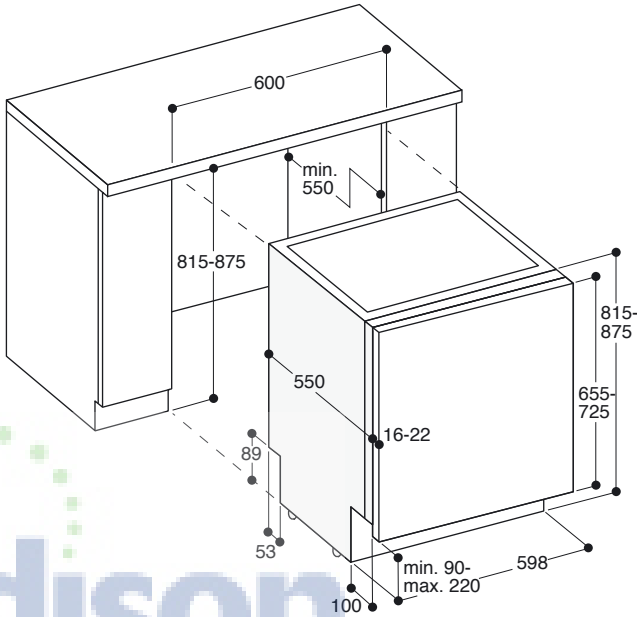

86.5 cm high dishwasher

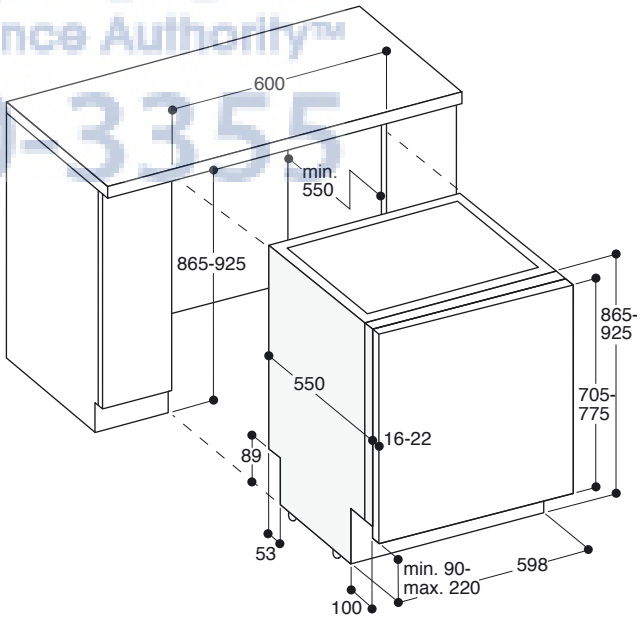

Connection dimensions for a 60 cm wide dishwasher

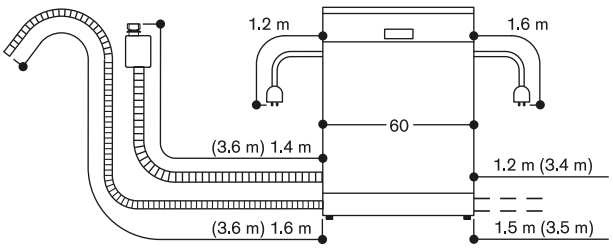

( ) values with extension kit

AJ Madison
Your Appliance Authority™
800-570-3355

DF 260 142▼
fully integrated
Height 81.5 cm, width 45 cm

▼ Available 2. quarter 2013

Included in the price
1 baking tray spray head

Installation accessories
DA 020 010
Stainless steel trim kit for 81.5 cm high dishwashers
DA 021 000
Hinge for all fully integrated diswashers
GZ 010 011
Aqua stop extension (2 m long) for all dishwashers

Special accessories
DA 042 030
Silvercare cartridge for all dishwashers

Dishwasher
DF 260

- Six programmes with Aqua sensor and two options
- Flex Plus basket system including third level
- Remaining time projection onto the kitchen floor
- Glasscare technology
- Very quiet: 44 dB
- Energy efficiency class A++
- Aqua stop with guarantee

Handling
Display with time remaining indicator.
Electronic refill indicator for salt and rinsing agent.
Inflow water indicator.
End of programme indicator.
Time delay up to 24 hours.

Technical Features
Remaining time projection.
Glasscare technology.
Aqua sensor.
Load sensor.
Aqua stop with guarantee.
Automatic detergent function.
Regeneration electronics.
Heat exchanger.
Continuous flow heater.
Soft lock.
Triple filter system, self-cleaning.

Programmes
6 programmes:
Auto 65 °C – 75 °C.
Auto 45 °C – 65 °C.
Auto 35 °C – 45 °C.
Standard Eco 50 °C.
Quick wash 45 °C (29 min.).
Pre-rinse.

2 Options:
Power.
Intensive.

Features
Flex Plus Drawer.
Flex Plus upper basket:
Rackmatic with 3 levels, adjustable in height up to 5 cm.
3 folding spines.
1 folding rack.

Flex Plus lower basket:
Glass support.
2 folding spines.
2 folding racks.
Cutlery basket.

Maximum dish sizes (upper/lower basket)
19/25, 16.5/27.5 or 14/30 cm respectively.

10 place setting capacity.

Consumption data
Energy efficiency class A++.
From 9 l water.
From 0.75 kwh.
Noise level 44 dB (re 1 pW).

Planning notes
Height-adjustable feet.
Appliance plinth recess 100 mm (see drawing).
To display the remaining time projection, a minimum plinth protrusion must be present (40 mm + thickness of the furniture front). The maximum plinth height must be reduced by 30 mm to provide an optimal display of the remaining time projection.
Rear feet adjustable at front.
Door weight up to 7.5 kg.
Door panel dimension dependent on plinth height of kitchen furniture.
Installation possible in tall unit. For installation into a tall unit, ventilation openings are provided (min. 150 cm²).

Please read additional planning notes on page 330–337.

Connection
Total connected load 2.3 kW.
Connecting cable pluggable.
Water connection with 3/4" screw joint.
Connection to hot or cold water possible.

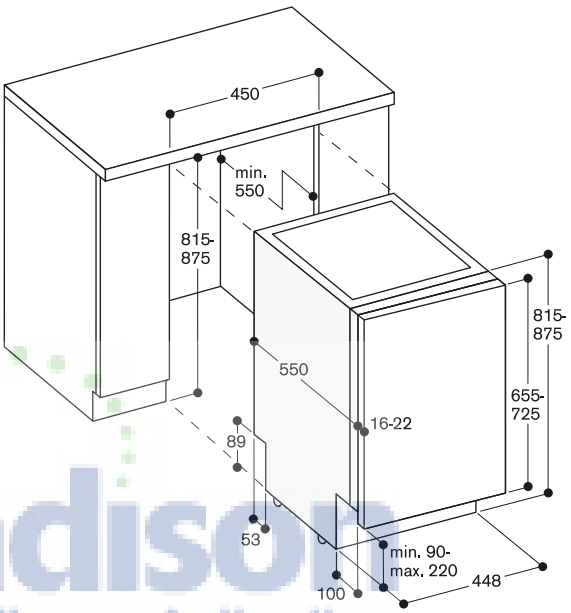

Connection dimensions for a 45 cm wide dishwasher

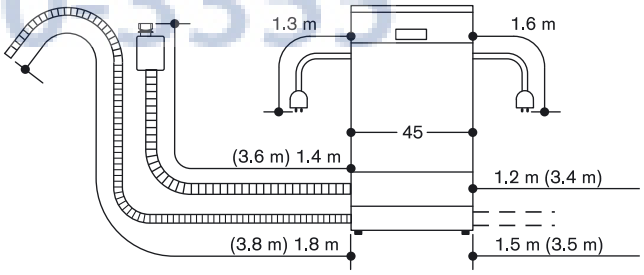

Values in () with Aquastop extension GZ 010 011

AJMadison
Your Appliance Authority™
800-570-3355

For niche heights from 815 to 855 mm, in most cases, the 81.5 cm high dishwasher must be planned, regardless of the plinth height.

For niche heights from 885 to 925 mm, in most cases, the 86.5 cm high dishwasher must be planned, regardless of the plinth height.

If the niche height amounts to 865 or 875 mm, please note:
Whether the 81.5 cm high dishwasher or the 86.5 cm high dishwasher can be used here depends on the plinth height.

For dishwasher with remaining time projection, the maximum plinth height must be reduced by 30 mm to provide an optimal display.

Cabinet height 655–725 mm

Cabinet height 705–775 mm

Niche height in mm →

← Plinth height in mm	815	825	835	845	855	865	875	885	895	905	915	925
<90	❶ (S)	❶ (S)	❶ (S)	❶ (S)	❶ (S)	❶❻ (S)	❶❻ (S)	❻ (S)	❻ (S)	❻ (S)	❻ (S)	❻ (S)
90	❶	❶ (S/D) (*)	❶ (S)	❶ (S)	❶ (S)	❶ (S) ❻	❶(S) ❻ (S/D)	❻ (S)	❻ (S)	❻ (S)	❻ (S)	❻ (S)
100	❶	❶	❶ (S/D)	❶ (S)	❶ (S)	❶ (S) ❻	❶ (S) ❻	❻ (S/D)	❻ (S)	❻ (S)	❻ (S)	❻ (S)
110	❶	❶	❶	❶ (S/D)	❶ (S)	❶ (S) ❻	❶ (S) ❻	❻	❻ (S/D)	❻ (S)	❻ (S)	❻ (S)
120	❶	❶	❶	❶	❶ (S/D)	❶ (S) ❻	❶ (S) ❻	❻	❻	❻ (S/D)	❻ (S)	❻ (S)
130	❶	❶	❶	❶	❶	❶ (S/D) ❻	❶ (S) ❻	❻	❻	❻	❻ (S/D)	❻ (S)
140	❶ (*)	❶	❶	❶	❶	❶ (S) ❻ (*)	❶ (S/D) ❻	❻	❻	❻	❻	❻ (S/D)
150	❶ (*)	❶ (*)	❶	❶	❶	❶ (S) ❻ (*)	❶ (S) ❻ (*)	❻	❻	❻	❻	❻
160	❶ (*)	❶ (*)	❶ (*)	❶	❶	❶ (S) ❻ (*)	❶ (S) ❻ (*)	❻ (*)	❻	❻	❻	❻
170		❶ (*)	❶ (*)	❶ (*)	❶	❶	❶ (S) ❻ (*)	❻ (*)	❻ (*)	❻	❻	❻
180			❶ (*)	❶ (*)	❶ (*)	❶	❶	❻ (*)	❻ (*)	❻ (*)	❻	❻
190				❶ (*)	❶ (*)	❶ (*)	❶		❻ (*)	❻ (*)	❻ (*)	❻
200					❶ (*)	❶ (*)	❶ (*)			❻ (*)	❻ (*)	❻ (*)
210						❶ (*)	❶ (*)				❻ (*)	❻ (*)
220							❶ (*)					❻ (*)

❶ = 81.5 cm high dishwasher DF 460/DI 460/DF 260/DF 240, (S) = special solution
❻ = 86.5 cm high dishwasher DF 461/DI 461/DF 261/DF 241, (S) = special solution
(S) = special solution with folding hinge (DA 021 000) / divided kitchen furniture door
(D) = special solution with 10 mm gap from the worktop → Spacer batten / child lock not possible
(*) = for dishwashers with remaining time projection. Displaying the remaining time projection is not possible.

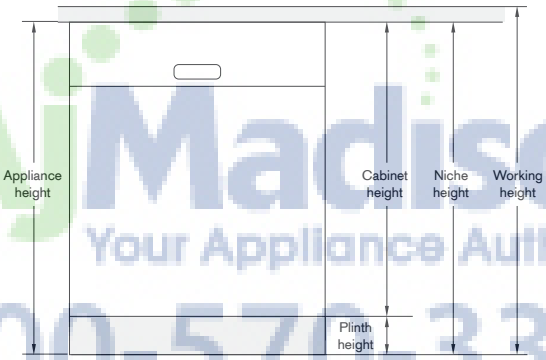

AjMadison
Your Appliance Authority™
800-570-3355

Installation chart for door panel DA 231

Undercounter

The door panels can't be used with dishwashers with flexible hinge.

The door panel is continuously variable for height over a range of 49 mm.

Cabinet height 670–720 mm

Cabinet height 720–770 mm

Niche height in mm →

← Plinth height in mm	815	825	835	845	855	865	875	885	895	905	915	925
95	❶					❻						
105	❶	❶				❻	❻					
115	❶	❶	❶			❻	❻	❻				
125	❶	❶	❶	❶		❻	❻	❻	❻			
135	❶	❶	❶	❶	❶	❻	❻	❻	❻	❻		
145	❶	❶	❶	❶	❶	❶❻	❻	❻	❻	❻	❻	
155		❶	❶	❶	❶	❶	❶❻	❻	❻	❻	❻	❻
165			❶	❶	❶	❶	❶	❻	❻	❻	❻	❻
175				❶	❶	❶	❶		❻	❻	❻	❻
185					❶	❶	❶			❻	❻	❻
195						❶	❶				❻	❻
205							❶					❻

❶ = 81.5 cm high dishwasher DF 460 162 / DF 260 161 / DF 240 161, door panels DA 231 000/010/030
❻ = 86.5 cm high dishwasher DF 461 162 / DF 261 161 / DF 241 161, door panels DA 231 100/110/130

Additional planning notes – tall unit installation of standard dishwashers (without flexible hinge).

Tall unit installation of dishwashers without slanted drawer panel

The table contains the gap size required between the kitchen furniture door panel and drawer panel with reference to niche height, plinth height and panel thickness when using a standard kitchen furniture door panel for dishwashers installed below worktops.

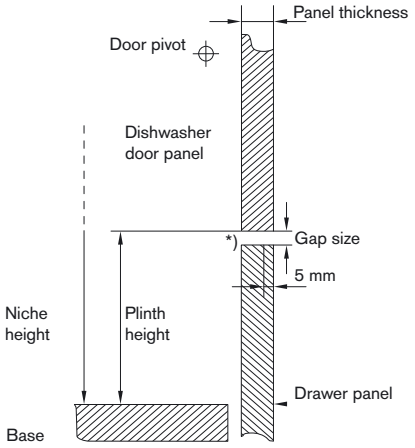

* The pivot area of the door should be at least 4 mm.

Niche height (mm)	Panel thickness (mm)	Plinth height (mm)								
		90	100	110	120	130	140	150	160	170
815	16	10.5	11	12	13	14.5	16.5	19	22.5	
	19	12	12.5	13.5	15	16.5	18.5	22	25.5	
	22	13.5	14.5	15.5	16.5	18.5	21	24.5	28.5	
825	16		10.5	11	12	13	14.5	16.5	19	22.5
	19		12	12.5	13.5	15	16.5	18.5	22	25.5
	22		13.5	14.5	15.5	16.5	18.5	21	24.5	28.5
835	16			10.5	11	12	13	14.5	16.5	19
	19			12	12.5	13.5	15	16.5	18.5	22
	22			13.5	14.5	15.5	16.5	18.5	21	24.5
845	16				10.5	11	12	13	14.5	16.5
	19				12	12.5	13.5	15	16.5	18.5
	22				13.5	14.5	15.5	16.5	18.5	21
855	16					10.5	11	12	13	14.5
	19					12	12.5	13.5	15	16.5
	22					13.5	14.5	15.5	16.5	18.5
865	16	10.5	11	12	13	14.5	16.5	19	22.5	
	19	12	12.5	13.5	15	16.5	18.5	22	25.5	
	22	13.5	14.5	15.5	16.5	18.5	21	24.5	28.5	
875	16		10.5	11	12	13	14.5	16.5	19	22.5
	19		12	12.5	13.5	15	16.5	18.5	22	25.5
	22		13.5	14.5	15.5	16.5	18.5	21	24.5	28.5
885	16			10.5	11	12	13	14.5	16.5	19
	19			12	12.5	13.5	15	16.5	18.5	22
	22			13.5	14.5	15.5	16.5	18.5	21	24.5
895	16				10.5	11	12	13	14.5	16.5
	19				12	12.5	13.5	15	16.5	18.5
	22				13.5	14.5	15.5	16.5	18.5	21
905	16					10.5	11	12	13	14.5
	19					12	12.5	13.5	15	16.5
	22					13.5	14.5	15.5	16.5	18.5
915	16						10.5	11	12	13
	19						12	12.5	13.5	15
	22						13.5	14.5	15.5	16.5
925	16							10.5	11	12
	19							12	12.5	13.5
	22							13.5	14.5	15.5

Tall unit installation of dishwashers with slanted drawer panel

The table contains the gap size required between the kitchen furniture door panel and drawer panel with reference to niche height, plinth height and panel thickness when using a standard kitchen furniture door panel for dishwashers installed below worktops.

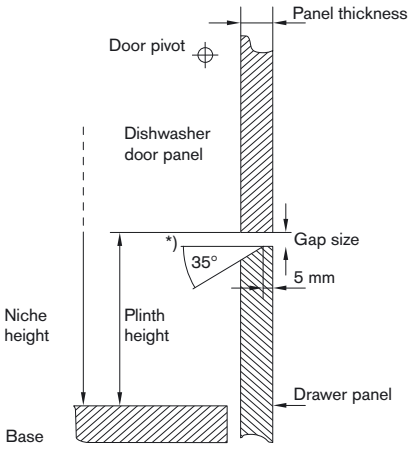

* The pivot area of the door should be at least 4 mm.

Niche height (mm)	Panel thickness (mm)	Plinth height (mm)								
		90	100	110	120	130	140	150	160	170
815	16	6.5	6.5	7	7.5	8	9	12	15.5	
	19	7	7.5	8	8.5	9.5	11	13	17	
	22	7.5	7.5	8	9	9.5	11.5	14	18	
825	16		6.5	6.5	7	7.5	8	9	12	15.5
	19		7	7.5	8	8.5	9.5	11	13	17
	22		7.5	7.5	8	9	9.5	11.5	14	18
835	16			6.5	6.5	7	7.5	8	9	12
	19			7	7.5	8	8.5	9.5	11	13
	22			7.5	7.5	8	9	9.5	11.5	14
845	16				6.5	6.5	7	7.5	8	9
	19				7	7.5	8	8.5	9.5	11
	22				7.5	7.5	8	9	9.5	11.5
855	16					6.5	6.5	7	7.5	8
	19					7	7.5	8	8.5	9.5
	22					7.5	7.5	8	9	9.5
865	16	6.5	6.5	7	7.5	8	9	12	15.5	
	19	7	7.5	8	8.5	9.5	11	13	17	
	22	7.5	7.5	8	9	9.5	11.5	14	18	
875	16		6.5	6.5	7	7.5	8	9	12	15.5
	19		7	7.5	8	8.5	9.5	11	13	17
	22		7.5	7.5	8	9	9.5	11.5	14	18
885	16			6.5	6.5	7	7.5	8	9	12
	19			7	7.5	8	8.5	9.5	11	13
	22			7.5	7.5	8	9	9.5	11.5	14
895	16				6.5	6.5	7	7.5	8	9
	19				7	7.5	8	8.5	9.5	11
	22				7.5	7.5	8	9	9.5	11.5
905	16					6.5	6.5	7	7.5	8
	19					7	7.5	8	8.5	9.5
	22					7.5	7.5	8	9	9.5
915	16						6.5	6.5	7	7.5
	19						7	7.5	8	8.5
	22						7.5	7.5	8	9
925	16							6.5	6.5	7
	19							7	7.5	8
	22							7.5	7.5	8

AjMadison Your Appliance Authority 800-570-3355

Additional planning notes for dishwashers with flexible hinge.

For niche heights from 815 to 860 mm, in most cases, the 81.5 cm high dishwasher must be planned, regardless of the plinth height.

For niche heights from 880 to 925 mm, in most cases, the 86.5 cm high dishwasher must be planned, regardless of the plinth height.

If the niche height amounts between 865 and 875 mm, please note:
Whether the 81.5 cm high dishwasher or the 86.5 cm high dishwasher can be used here depends on the plinth height.

If the installation of a dishwasher with flexible hinge is necessary or not depends on several factors.

The door panels can't be used with dishwashers with flexible hinge.

Cabinet height 655–750 mm

Niche height in mm →

← Plinth height in mm	815	820	825	830	835	840	845	850	855	860
65	❶									
70	❶	❶								
75	❶	❶	❶							
80	❶	❶	❶	❶						
85	❶	❶	❶	❶	❶					
90	❶	❶	❶	❶	❶	❶				
95	❶	❶	❶	❶	❶	❶	❶			
100	❶	❶	❶	❶	❶	❶	❶	❶		
105	❶	❶	❶	❶	❶	❶	❶	❶	❶	
110	❶	❶	❶	❶	❶	❶	❶	❶	❶	❶
115	❶	❶	❶	❶	❶	❶	❶	❶	❶	❶
120	❶	❶	❶	❶	❶	❶	❶	❶	❶	❶
125	❶	❶	❶	❶	❶	❶	❶	❶	❶	❶
130	❶	❶	❶	❶	❶	❶	❶	❶	❶	❶
135	❶	❶	❶	❶	❶	❶	❶	❶	❶	❶
140	❶	❶	❶	❶	❶	❶	❶	❶	❶	❶
145	❶	❶	❶	❶	❶	❶	❶	❶	❶	❶
150	❶	❶	❶	❶	❶	❶	❶	❶	❶	❶
155	❶	❶	❶	❶	❶	❶	❶	❶	❶	❶
160	❶	❶	❶	❶	❶	❶	❶	❶	❶	❶
165		❶	❶	❶	❶	❶	❶	❶	❶	❶
170			❶	❶	❶	❶	❶	❶	❶	❶
175				❶	❶	❶	❶	❶	❶	❶
180					❶	❶	❶	❶	❶	❶
185						❶	❶	❶	❶	❶
190							❶	❶	❶	❶
195								❶	❶	❶
200									❶	❶
205										❶
210										
215										
220										

❶ = 81.5 cm high dishwasher with flexible hinge DF 460 162F / DF 260 161F
❻ = 86.5 cm high dishwasher with flexible hinge DF 461 162F / DF 261 161F

AJMadison
Your Appliance Authority™
800-570-3355

Cabinet height 705–800 mm

865	870	875	880	885	890	895	900	905	910	915	920	925
6												
6	6											
6	6	6										
6	6	6	6									
6	6	6	6	6								
6	6	6	6	6	6							
6	6	6	6	6	6	6						
6	6	6	6	6	6	6	6					
6	6	6	6	6	6	6	6	6				
6	6	6	6	6	6	6	6	6	6			
1 6	6	6	6	6	6	6	6	6	6	6		
1 6	1 6	6	6	6	6	6	6	6	6	6	6	
1 6	1 6	1 6	6	6	6	6	6	6	6	6	6	6
1 6	1 6	1 6	6	6	6	6	6	6	6	6	6	6
1 6	1 6	1 6	6	6	6	6	6	6	6	6	6	6
1 6	1 6	1 6	6	6	6	6	6	6	6	6	6	6
1 6	1 6	1 6	6	6	6	6	6	6	6	6	6	6
1 6	1 6	1 6	6	6	6	6	6	6	6	6	6	6
1 6	1 6	1 6	6	6	6	6	6	6	6	6	6	6
1 6	1 6	1 6	6	6	6	6	6	6	6	6	6	6
1	1 6	1 6	6	6	6	6	6	6	6	6	6	6
1	1	1 6	6	6	6	6	6	6	6	6	6	6
1	1	1	6	6	6	6	6	6	6	6	6	6
1	1	1		6	6	6	6	6	6	6	6	6
1	1	1			6	6	6	6	6	6	6	6
1	1	1				6	6	6	6	6	6	6
1	1	1					6	6	6	6	6	6
1	1	1						6	6	6	6	6
1	1	1							6	6	6	6
1	1	1								6	6	6
	1	1									6	6
		1										6

AjMadison
Your Appliance Authority™
800-570-3355

Tall unit installation of dishwashers with flexible hinge – **without slanted** drawer panel

The table contains the gap size required between the kitchen furniture door panel and drawer panel with reference to niche height, plinth height and panel thickness when using a standard kitchen furniture door panel for dishwashers installed below worktops.

Niche height (mm)	Panel thickness (mm)	Plinth height (mm)							
		65	70	75	80	85	90	95	100
815	16	3.5	3.5	3.5	4	4	4	4	4
	19	4	4	4.5	4.5	4.5	4.5	5	5
	22	4.5	5	5	5	5.5	5.5	5.5	6
820	16		3.5	3.5	3.5	4	4	4	4
	19		4	4	4.5	4.5	4.5	4.5	5
	22		4.5	5	5	5	5.5	5.5	5.5
825	16			3.5	3.5	3.5	3.5	4	4
	19			4	4	4.5	4.5	4.5	5
	22			4.5	5	5	5	5.5	5.5
830	16				3.5	3.5	3.5	4	4
	19				4	4	4.5	4.5	4.5
	22				4.5	5	5	5	5.5
835	16					3.5	3.5	3.5	3.5
	19					4	4	4.5	4.5
	22					4.5	4.5	5	5
840	16						3.5	3.5	3.5
	19						4	4	4.5
	22						4.5	5	5
845	16							3.5	3.5
	19							4	4
	22							4.5	4.5
850	16								3.5
	19								4
	22								4.5
855	16								
	19								
	22								
860	16								
	19								
	22								
865	16	3.5	3.5	3.5	4	4	4	4	4
	19	4	4	4.5	4.5	4.5	4.5	5	5
	22	4.5	5	5	5	5.5	5.5	5.5	6
870	16		3.5	3.5	3.5	4	4	4	4
	19		4	4	4.5	4.5	4.5	4.5	5
	22		4.5	5	5	5	5.5	5.5	5.5
875	16			3.5	3.5	3.5	3.5	4	4
	19			4	4	4.5	4.5	4.5	5
	22			4.5	5	5	5	5.5	5.5
880	16				3.5	3.5	3.5	4	4
	19				4	4	4.5	4.5	4.5
	22				4.5	5	5	5	5.5
885	16					3.5	3.5	3.5	3.5
	19					4	4	4.5	4.5
	22					4.5	4.5	5	5
890	16						3.5	3.5	3.5
	19						4	4	4.5
	22						4.5	5	5
895	16							3.5	3.5
	19							4	4
	22							4.5	4.5
900	16								3.5
	19								4
	22								4.5
905	16								
	19								
	22								
910	16								
	19								
	22								
915	16								
	19								
	22								
920	16								
	19								
	22								
925	16								
	19								
	22								

AjMadison Your Appliance Authority™ 800-570-3355

105	110	115	120	125	130	135	140	145	150	155	160	165	170
4.5	4.5	4.5	5	5	6	6.5	7						
5	5.5	5.5	6	6	7	7.5	9						
6	6.5	6.5	7.5	8	9	10	12						
4	4.5	4.5	4.5	5	5	6	6.5	7					
5	5	5.5	5.5	6	6	7	7.5	9					
6	6	6.5	6.5	7.5	8	9	10	12					
4	4.5	4.5	4.5	4.5	5	5	6	6.5	7				
5	5	5	5.5	5.5	6	6	7	7.5	9				
5.5	6	6	6.5	6.5	7.5	8	9	10	12				
4	4	4	4.5	4.5	4.5	5	5	6	6.5	7			
4.5	5	5	5	5.5	5.5	6	6	7	7.5	9			
5.5	5.5	6	6	6.5	6.5	7.5	8	9	10	12			
4	4	4	4.5	4.5	4.5	4.5	5	5	6	6.5	7		
4.5	5	5	5	5	5.5	5.5	6	6	7	7.5	9		
5.5	5.5	5.5	6	6	6.5	6.5	7.5	8	9	10	12		
4	4	4	4	4	4.5	4.5	4.5	5	5	6	6.5	7	
4.5	4.5	4.5	5	5	5	5.5	5.5	6	6	7	7.5	9	
5	5.5	5.5	5.5	6	6	6.5	6.5	7.5	8	9	10	12	
3.5	3.5	4	4	4	4.5	4.5	4.5	4.5	5	5	6	6.5	7
4.5	4.5	4.5	5	5	5	5	5.5	5.5	6	6	7	7.5	9
5	5	5.5	5.5	5.5	6	6	6.5	6.5	7.5	8	9	10	12
3.5	3.5	4	4	4	4	4	4.5	4.5	4.5	5	5	6	6.5
4	4.5	4.5	4.5	4.5	5	5	5	5.5	5.5	6	6	7	7.5
5	5	5	5.5	5.5	5.5	6	6	6.5	6.5	7.5	8	9	10
3.5	3.5	3.5	3.5	4	4	4	4.5	4.5	4.5	4.5	5	5	6
4	4	4.5	4.5	4.5	5	5	5	5	5.5	5.5	6	6	7
4.5	4.5	5	5	5.5	5.5	5.5	6	6	6.5	6.5	7.5	8	9
	3.5	3.5	3.5	4	4	4	4	4	4.5	4.5	4.5	5	5
	4	4	4.5	4.5	4.5	4.5	5	5	5	5.5	5.5	6	6
	4.5	5	5	5	5.5	5.5	5.5	6	6	6.5	6.5	7.5	8
4.5	4.5	4.5	5	5	6	6.5	7						
5	5.5	5.5	6	6	7	7.5	9						
6	6.5	6.5	7.5	8	9	10	12						
4	4.5	4.5	4.5	5	5	6	6.5	7					
5	5	5.5	5.5	6	6	7	7.5	9					
6	6	6.5	6.5	7.5	8	9	10	12					
4	4.5	4.5	4.5	4.5	5	5	6	6.5	7				
5	5	5	5.5	5.5	6	6	7	7.5	9				
5.5	6	6	6.5	6.5	7.5	8	9	10	12				
4	4	4	4.5	4.5	4.5	5	5	6	6.5	7			
4.5	5	5	5	5.5	5.5	6	6	7	7.5	9			
5.5	5.5	6	6	6.5	6.5	7.5	8	9	10	12			
4	4	4	4.5	4.5	4.5	4.5	5	5	6	6.5	7		
4.5	4.5	4.5	5	5	5	5.5	5.5	6	6	7	7.5	9	
5	5.5	5.5	5.5	6	6	6.5	6.5	7.5	8	9	10	12	
3.5	3.5	4	4	4	4.5	4.5	4.5	4.5	5	5	6	6.5	7
4.5	4.5	4.5	5	5	5	5	5.5	5.5	6	6	7	7.5	9
5	5	5.5	5.5	5.5	6	6	6.5	6.5	7.5	8	9	10	12
3.5	3.5	4	4	4	4	4	4.5	4.5	4.5	5	5	6	6.5
4	4.5	4.5	4.5	4.5	5	5	5	5.5	5.5	6	6	7	7.5
5	5	5	5.5	5.5	5.5	6	6	6.5	6.5	7.5	8	9	10
3.5	3.5	3.5	3.5	4	4	4	4.5	4.5	4.5	4.5	5	5	6
4	4	4.5	4.5	4.5	5	5	5	5	5.5	5.5	6	6	7
4.5	4.5	5	5	5.5	5.5	5.5	6	6	6.5	6.5	7.5	8	9
	3.5	3.5	3.5	4	4	4	4	4	4.5	4.5	4.5	5	5
	4	4	4.5	4.5	4.5	4.5	5	5	5	5.5	5.5	6	6
	4.5	5	5	5	5.5	5.5	5.5	6	6	6.5	6.5	7.5	8
		3.5	3.5	3.5	3.5	4	4	4	4.5	4.5	4.5	4.5	5
		4	4	4.5	4.5	4.5	5	5	5	5	5.5	5.5	6
		4.5	4.5	5	5	5.5	5.5	5.5	6	6	6.5	6.5	7.5
			3.5	3.5	3.5	4	4	4	4	4	4.5	4.5	4.5
			4	4	4.5	4.5	4.5	4.5	5	5	5	5.5	5.5
			4.5	5	5	5	5.5	5.5	5.5	6	6	6.5	6.5
				3.5	3.5	3.5	3.5	4	4	4	4.5	4.5	4.5
				4	4	4.5	4.5	4.5	5	5	5	5	5.5
				4.5	4.5	5	5	5.5	5.5	5.5	6	6	6.5

AjMadison
Your Appliance Authority™
800-570-3355

Tall unit installation of dishwashers with flexible hinge – **with slanted** drawer panel

The table contains the gap size required between the kitchen furniture door panel and drawer panel with reference to niche height, plinth height and panel thickness when using a standard kitchen furniture door panel for dishwashers installed below worktops.

Niche height (mm)	Panel thickness (mm)	Plinth height (mm)							
		65	70	75	80	85	90	95	100
815	16	2.5	2.5	2.5	3	3	3	3	3
	19	2.5	2.5	3	3	3.5	3.5	3.5	3.5
	22	3	3	3	3.5	3.5	3.5	3.5	4
820	16		2.5	2.5	2.5	3	3	3	3
	19		2.5	2.5	3	3	3.5	3.5	3.5
	22		3	3	3	3.5	3.5	3.5	3.5
825	16			2.5	2.5	2.5	3	3	3
	19			2.5	2.5	3	3	3.5	3.5
	22			3	3	3	3.5	3.5	3.5
830	16				2.5	2.5	2.5	3	3
	19				2.5	2.5	3	3	3.5
	22				3	3	3	3.5	3.5
835	16					2.5	2.5	2.5	3
	19					2.5	2.5	3	3
	22					3	3	3	3.5
840	16						2.5	2.5	2.5
	19						2.5	2.5	3
	22						3	3	3
845	16							2.5	2.5
	19							2.5	2.5
	22							3	3
850	16								2.5
	19								2.5
	22								3
855	16								
	19								
	22								
860	16								
	19								
	22								
865	16	2.5	2.5	2.5	3	3	3	3	3
	19	2.5	2.5	3	3	3.5	3.5	3.5	3.5
	22	3	3	3	3.5	3.5	3.5	3.5	4
870	16		2.5	2.5	2.5	3	3	3	3
	19		2.5	2.5	3	3	3.5	3.5	3.5
	22		3	3	3	3.5	3.5	3.5	3.5
875	16			2.5	2.5	2.5	3	3	3
	19			2.5	2.5	3	3	3.5	3.5
	22			3	3	3	3.5	3.5	3.5
880	16				2.5	2.5	2.5	3	3
	19				2.5	2.5	3	3	3.5
	22				3	3	3	3.5	3.5
885	16					2.5	2.5	2.5	3
	19					2.5	2.5	3	3
	22					3	3	3	3.5
890	16						2.5	2.5	2.5
	19						2.5	2.5	3
	22						3	3	3
895	16							2.5	2.5
	19							2.5	2.5
	22							3	3
900	16								2.5
	19								2.5
	22								3
905	16								
	19								
	22								
910	16								
	19								
	22								
915	16								
	19								
	22								
920	16								
	19								
	22								
925	16								
	19								
	22								

AjMadison
Your Appliance Authority™
800-570-3355

105	110	115	120	125	130	135	140	145	150	155	160	165	170
3.5	3.5	4	4	4.5	4.5	5	5.5						
3.5	4	4.5	4.5	5	5	6	7						
4	4.5	4.5	5	6	6.5	7.5	8						
3	3.5	3.5	4	4	4.5	4.5	5	5.5					
3.5	3.5	4	4.5	4.5	5	5	6	7					
4	4	4.5	4.5	5	6	6.5	7.5	8					
3	3	3.5	3.5	4	4	4.5	4.5	5	5.5				
3.5	3.5	3.5	4	4.5	4.5	5	5	6	7				
3.5	4	4	4.5	4.5	5	6	6.5	7.5	8				
3	3	3	3.5	3.5	4	4	4.5	4.5	5	5.5			
3.5	3.5	3.5	3.5	4	4.5	4.5	5	5	6	7			
3.5	3.5	4	4	4.5	4.5	5	6	6.5	7.5	8			
3	3	3	3	3.5	3.5	4	4	4.5	4.5	5	5.5		
3.5	3.5	3.5	3.5	3.5	4	4.5	4.5	5	5	6	7		
3.5	3.5	3.5	4	4	4.5	4.5	5	6	6.5	7.5	8		
3	3	3	3	3	3.5	3.5	4	4	4.5	4.5	5	5.5	
3	3.5	3.5	3.5	3.5	3.5	4	4.5	4.5	5	5	6	7	
3.5	3.5	3.5	3.5	4	4	4.5	4.5	5	6	6.5	7.5	8	
2.5	3	3	3	3	3	3.5	3.5	4	4	4.5	4.5	5	5.5
3	3	3.5	3.5	3.5	3.5	3.5	4	4.5	4.5	5	5	6	7
3	3.5	3.5	3.5	3.5	4	4	4.5	4.5	5	6	6.5	7.5	8
2.5	2.5	3	3	3	3	3	3.5	3.5	4	4	4.5	4.5	5
2.5	3	3	3.5	3.5	3.5	3.5	3.5	4	4.5	4.5	5	5	6
3	3	3.5	3.5	3.5	3.5	4	4	4.5	4.5	5	6	6.5	7.5
2.5	2.5	2.5	3	3	3	3	3	3.5	3.5	4	4	4.5	4.5
2.5	2.5	3	3	3.5	3.5	3.5	3.5	3.5	4	4.5	4.5	5	5
3	3	3	3.5	3.5	3.5	3.5	4	4	4.5	4.5	5	6	6.5
	2.5	2.5	2.5	3	3	3	3	3	3.5	3.5	4	4	4.5
	2.5	2.5	3	3	3.5	3.5	3.5	3.5	3.5	4	4.5	4.5	5
	3	3	3	3.5	3.5	3.5	3.5	4	4	4.5	4.5	5	6
3.5	3.5	4	4	4.5	4.5	5	5.5						
3.5	4	4.5	4.5	5	5	6	7						
4	4.5	4.5	5	6	6.5	7.5	8						
3	3.5	3.5	4	4	4.5	4.5	5	5.5					
3.5	3.5	4	4.5	4.5	5	5	6	7					
4	4	4.5	4.5	5	6	6.5	7.5	8					
3	3	3.5	3.5	4	4	4.5	4.5	5	5.5				
3.5	3.5	3.5	4	4.5	4.5	5	5	6	7				
3.5	4	4	4.5	4.5	5	6	6.5	7.5	8				
3	3	3	3.5	3.5	4	4	4.5	4.5	5	5.5			
3.5	3.5	3.5	3.5	4	4.5	4.5	5	5	6	7			
3.5	3.5	4	4	4.5	4.5	5	6	6.5	7.5	8			
3	3	3	3	3.5	3.5	4	4	4.5	4.5	5	5.5		
3	3.5	3.5	3.5	3.5	3.5	4	4.5	4.5	5	5	6	7	
3.5	3.5	3.5	3.5	4	4	4.5	4.5	5	6	6.5	7.5	8	
2.5	3	3	3	3	3	3.5	3.5	4	4	4.5	4.5	5	5.5
3	3	3.5	3.5	3.5	3.5	3.5	4	4.5	4.5	5	5	6	7
3	3.5	3.5	3.5	3.5	4	4	4.5	4.5	5	6	6.5	7.5	8
2.5	2.5	3	3	3	3	3	3.5	3.5	4	4	4.5	4.5	5
2.5	3	3	3.5	3.5	3.5	3.5	3.5	4	4.5	4.5	5	5	6
3	3	3.5	3.5	3.5	3.5	4	4	4.5	4.5	5	6	6.5	7.5
2.5	2.5	2.5	3	3	3	3	3	3.5	3.5	4	4	4.5	4.5
2.5	2.5	3	3	3.5	3.5	3.5	3.5	3.5	4	4.5	4.5	5	5
3	3	3	3.5	3.5	3.5	3.5	4	4	4.5	4.5	5	6	6.5
	2.5	2.5	2.5	3	3	3	3	3	3.5	3.5	4	4	4.5
	2.5	2.5	3	3	3.5	3.5	3.5	3.5	3.5	4	4.5	4.5	5
	3	3	3	3.5	3.5	3.5	3.5	4	4	4.5	4.5	5	6
		2.5	2.5	2.5	3	3	3	3	3	3.5	3.5	4	4
		2.5	2.5	3	3	3.5	3.5	3.5	3.5	3.5	4	4.5	4.5
		3	3	3	3.5	3.5	3.5	3.5	4	4	4.5	4.5	5
			2.5	2.5	2.5	3	3	3	3	3	3.5	3.5	4
			2.5	2.5	3	3	3.5	3.5	3.5	3.5	3.5	4	4.5
			3	3	3	3.5	3.5	3.5	3.5	4	4	4.5	4.5
				2.5	2.5	2.5	3	3	3	3	3	3.5	3.5
				2.5	2.5	3	3	3.5	3.5	3.5	3.5	3.5	4
				3	3	3	3.5	3.5	3.5	3.5	4	4	4.5

AjMadison
Your Appliance Authority™
800-570-3355

Flex Plus baskets
Supplied as standard for all 60 cm wide dishwashers with 6 programmes.

Flex Plus upper and lower basket for more flexibility and easier handling when loading and unloading the dishwasher.

Flex Plus upper basket

6 folding spines.
4 folding racks.
2 glass support bars.
With extra-extendable smooth running pull-out rails as well as Rackmatic with 3 levels, adjustable in height up to 5 cm.
Handle for easier removal of the upper basket.

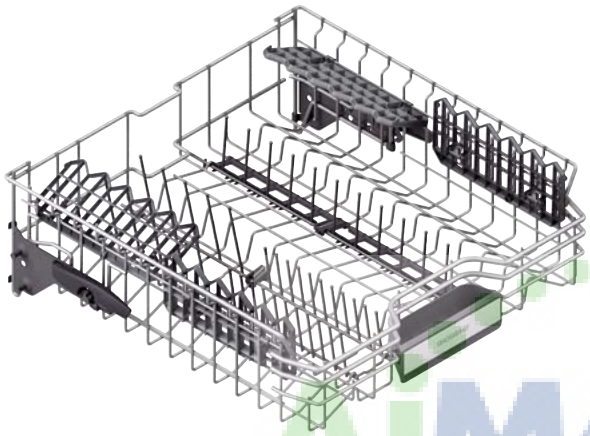

Flex Plus lower basket

Dividable glass support.
6 folding spines.
2 folding racks.
Cutlery basket.
Handle for easier removal of the lower basket.

DA 020 010
Stainless steel trim kit for all 81.5 cm high dishwashers
Set of 2, for left and right.
To cover the gap between appliance and adjacent furniture and for better fixation of the appliance in the niche.
The white frame is replaced by a stainless steel trim kit.
W x D in cm: 2.2 x 2.0.
Height 62.2 cm.

DA 020 110
Stainless steel trim kit for 86.5 cm high dishwashers
Set of 2, for left and right.
To cover the gap between appliance and adjacent furniture and for better fixation of the appliance in the niche.
The white frame is replaced by a stainless steel trim kit.
W x D in cm: 2.2 x 2.0.
Height 67.2 cm.

DA 021 000
Hinge for all fully integrated diswashers
Installation solution for all dishwashers with a niche height of up to 92 cm and split furniture panel.
The hinge is fastened to the plinth of the appliance and the lower part of the split furniture panel is mounted onto it.
Height upper part of the split furniture panel:
64.5 – 68 cm
for 81.5 cm high dishwashers.
69.5 – 73 cm
for 86.5 cm high dishwashers.

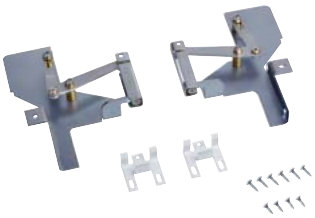

DA 041 061
Vario drawer incl. pull-out rails
3rd level above the Flex plus baskets.
For large pieces of cutlery, cooking utensils and espresso cups.
14 place setting capacity with all 3 levels.

AjMadison
Your Appliance Authority™
800-570-5555

DA 042 030
Silvercare cartridge for all dishwashers
Made of aluminium to protect silverware from corrosion.
Easy use of cartridge in the cutlery basket.
W x H x D in cm: 5.5 x 20.2 x 4.1.

DA 043 060
Glass basket for 60 cm wide dishwashers
Special basket to prevent tipping of cups or long stemmed glasses.
Fold the folding spines in the lower basket down to fit the glass basket.
Holds max. 12 long stemmed glasses or 24 cups.
Glass basket with 4 folding racks, silver-coloured.
W x H x D in cm: 49 x 23 x 26.

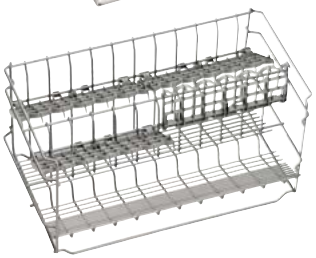

DA 044 000
Holder for Gastronorm inserts for 60 cm wide dishwashers
Offers safe positioning of the Gastronorm inserts during the dishwashing process and ensures an optimal drying result.
Position in the lower basket for up to 4 Gastronorm inserts.

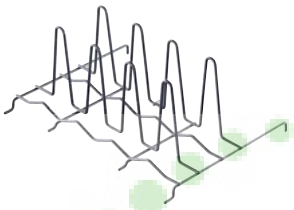

DA 231 000
Full glass door in Gaggenau Anthracite for 81.5 cm high dishwashers
Height adjustable by 49 mm, height 67 to 71.9 cm.
W x D in cm: 59 x 1.9.
Handle: W x D x Ø in cm: 45 x 4.9 x 1.4.

DA 231 100
Full glass door in Gaggenau Anthracite for 86.5 cm dishwashers
Height adjustable by 49 mm, height 67 to 71.9 cm.
W x D in cm: 59 x 1.9.
Handle: W x D x Ø in cm: 45 x 4.9 x 1.4.

DA 231 010
Stainless steel-backed full glass door for 81.5 cm high dishwashers
Height adjustable by 49 mm, height 67 to 71.9 cm.
W x D in cm: 59 x 1.9.
Handle: W x D x Ø in cm: 45 x 4.9 x 1.4.

DA 231 110
Stainless steel-backed full glass door for 86.5 cm dishwashers
Height adjustable by 49 mm, height 67 to 71.9 cm.
W x D in cm: 59 x 1.9.
Handle: W x D x Ø in cm: 45 x 4.9 x 1.4.

GH 035 010
Handle bar with 2 mounts, stainless steel, Length 35 cm, drilling distance 327 mm

GH 045 010
Handle bar with 2 mounts, stainless steel, Length 45 cm, drilling distance 427 mm

GZ 010 011
Aqua stop extension (2 m long)
Extends the water inlet and outlet.

AjMadison
Your Appliance Authority™
800-570-3355

Appliance type		Dishwasher	Dishwasher	Dishwasher
Model		Fully integrated	Fully integrated	Integrated
Panel colour				Stainless steel
Appliance height 81.5 cm		DF 460 163[7]		DI 460 113[7]
Appliance height 86.5 cm		DF 461 163[7]		DI 461 113[7]
Appliance height 81.5 cm with flexible hinge			DF 460 162F	
Appliance height 86.5 cm with flexible hinge			DF 461 162F	
Width/capacity				
Width	(cm)	60	60	60
Capacity in place settings		13/14[3]	13/143	13/14[3]
Dish size up to	(cm)	30[1]/33[2]	30[1]/33[2]	30[1]/33[2]
Consumption data/noise level[4]				
Energy efficiency class		A+++	A+++	A+++
Drying efficiency class		A	A	A
Test programmme		Standard Eco 50°C	Standard Eco 50°C	Standard Eco 50°C
Cycle time test programme	(min)	150	150	150
Water consumption	(l)	10	10	10
Energy consumption	(kWh)	0.8	0.8	0.8
Total annual energy consumption (280 cycles)[5]	(kWh)	234	234	234
Total annual water consumption (280 cycles)[5]	(l)	2,800	2,800	2,800
Noise level	(dB (re 1 pW))	42	42	42
Energy consumption off-mode/left-on mode	(W)	0.6/0.6	0.6/0.6	0.6/0.6
Left on-mode duration	(min)	0	0	0
Programmes				
Number of programmes + options		6 + 4	6 + 4	6 + 4
Programmes		Auto 65°C–75°C	Auto 65°C–75°C	Auto 65°C–75°C
		Auto 45°C–65°C	Auto 45°C–65°C	Auto 45°C–65°C
		Auto 35°C–45°C	Auto 35°C–45°C	Auto 35°C–45°C
		Standard Eco 50°C	Standard Eco 50°C	Standard Eco 50°C
		Quick wash 45°C	Quick wash 45°C	Quick wash 45°C
		Pre-rinse	Pre-rinse	Pre-rinse
Options		Power (57 min.)	Power (57 min.)	Power (57 min.)
		Intensive	Intensive	Intensive
		Extra Dry	Extra Dry	Extra Dry
		Energy Save	Energy Save	Energy Save
Features				
Glasscare Plus technology / Glasscare technology		•/–	•/–	•/–
Aqua sensor / Load sensor		•/•	•/•	•/•
Dosage Assist		•	•	•
Automatic detergent function		•	•	•
Regeneration electronics		•	•	•
Heat exchanger		•	•	•
Low temperature drying with Zeolite		•	•	•
Continous flow heater		•	•	•
Electronic refill indicator for salt/rinsing agent		•/•	•/•	•/•
Inflow water indicator		•	•	•
Time remaining indicator		•	•	•
Remaining time projection		•	–	–
Info-Light		–	•	–
Bright interior light		•	•	•
Time delay		24 h	24 h	24 h
Soft lock		•	•	•
Filter system self-cleaning		•	•	•
3rd level		DA 041 061[6]	DA 041 0616	DA 041 061[6]
Folding spines in upper/lower basket		6/6	6/6	6/6
Folding racks in upper/lower basket		4/2	4/2	4/2
Rackmatic		3-level	3-level	3-level
Child lock		•	•	•
Aqua stop with guarantee		•	•	•
Baking tray spray head / Gastronorm insert holder		•/•	•/•	•/•
Connection				
Connection to hot/cold water possible		•/•	•/•	•/•
Total connected load	(kW)	2.3	2.3	2.3

AiMadison
Your Appliance Authority™
800-570-3355

• Standard. – Not available. [1] Appliance height 81.5 cm.

[2] Appliance height 86.5 cm. [3] With special accessory DA 041 061.

[4] Values according to EU regulation 1059/2010. [5] Effective consumption depending on type of use of appliance.

[6] Special accessory.

[7] Available 2. quarter 2013.

Dishwasher	Dishwasher	Dishwasher	Dishwasher	Dishwasher
Integrated	Fully integrated	Fully integrated	Fully integrated	Fully integrated
Aluminium				
DI 460 133[7]	DF 260 162[7]		DF 240 161	DF 260 142[7]
DI 461 133[7]	DF 261 162[7]		DF 241 161	
		DF 260 161F		
		DF 261 161F		
60	60	60	60	45
13/14[3]	13/14[3]	13/143	13	10
30[1]/33[2]	30[1]/33[2]	30[1]/33[2]	30[1]/33[2]	30
A+++	A++	A++	A++	A++
A	A	A	A	A
Standard Eco 50°C	Standard Eco 50°C	Standard Eco 50°C	Standard Eco 50°C	Standard Eco 50°C
150	175	175	175	185
10	10	10	10	9
0.8	0.92	0.92	0.92	0.75
234	262	262	262	211
2,800	2,800	2,800	2,800	2,520
42	42	42	44	44
0.6/0.6	0.6/0.6	0.6/0.6	0.6/0.6	0.1/0.1
0	0	0	0	0
6 + 4	6 + 2	6 + 2	4 + 2	6 + 2
Auto 65°C–75°C	Auto 65°C–75°C	Auto 65°C–75°C	Auto 65°C–75°C	Auto 65°C–75°C
Auto 45°C–65°C	Auto 45°C–65°C	Auto 45°C–65°C	Auto 45°C–65°C	Auto 45°C–65°C
Auto 35°C–45°C	Auto 35°C–45°C	Auto 35°C–45°C		Auto 35°C–45°C
Standard Eco 50°C	Standard Eco 50°C	Standard Eco 50°C	Standard Eco 50°C	Standard Eco 50°C
Quick wash 45°C	Quick wash 45°C	Quick wash 45°C	Quick wash 45°C	Quick wash 45°C
Pre-rinse	Pre-rinse	Pre-rinse		Pre-rinse
Power (57 min.)	Power (59 min.)	Power (59 min.)	Power (59 min.)	Power (85 min.)
Intensive	Intensive	Intensive	Intensive	Intensive
Extra Dry				
Energy Save				
•/–	–/•	–/•	–/•	–/•
•/•	•/•	•/•	•/•	•/•
•	•	•	•	•
•	•	•	•	•
•	•	•	•	•
•	•	•	•	•
•	–	–	–	–
•	•	•	•	•
•/•	•/•	•/•	•/•	•/•
•	•	•	•	•
•	•	•	•	•
–	•	–	–	•
–	–	•	•	–
•	–	–	–	–
24 h	24 h	24 h	24 h	24 h
•	•	•	•	•
•	•	•	•	•
DA 041 061[6]	DA 041 061[6]	DA 041 0616	–	•
6/6	6/6	6/6	2/4	3/2
4/2	4/2	4/2	2/2	1/2
3-level	3-level	3-level	3-level	3-level
•	•	•	•	•
•	•	•	•	•
•/•	•/–	•/–	•/–	•/–
•/•	•/•	•/•	•/•	•/•
2.3	2.3	2.3	2.3	2.3

AJMadison
Your Appliance Authority™
800-570-3355

WM 260 161
Free-standing, slide-under or stackable
Width 60 cm, height 84.8 cm

Special accessories
WA 200 001
Aqua stop extension
WA 200 003
Floor fixation kit

Washing machine
WM 260

- Can be perfectly combined with WD 260 101
- Large drum with interior lighting
- Large porthole with 180 ° door opening angle
- Innovative motor technology for more performance, higher durability as well as less energy consumption and noise
- Anti-stain automatic for stain specific programme cycles
- Energy efficiency class A+++

Handling
Electronic control.
Illuminated rotary knob with integrated On-Off switch.
Touch key operation.
TFT display with clear text and symbols.
Loading indicator with dosage recommendation.
Programme sequence and remaining time display.
Time delay up to 24 h hours.
Multiple signal tones.

Technical Features
Aqua sensor.
Aqua stop with guarantee.
Flow-through sensor.
Anti-stain automatic.
Continous automatic load adjustment.
Foam detection system.
Spin speed selection from 400 to 1,600 rpm.
Top-up function.
Automatic stabilisation.
Anti-crease system.
Child lock.

Programmes
Cottons/Coloureds, cold to 90 °C.
Easy care, cold to 60 °C.
Quick/Mix 40 °C.
Delicates/Silk, cold to 40 °C.
Wool, cold to 40 °C.
Lingerie.
Shirts/blouses.
Downs.
Textile Guard.
Super 15.
Dark wash.
Memory.
Outdoor, Rinse, Spin, Soft Spin, Empty.

Options
Pre-wash.
Silent wash.
Eco Perfect/Speed Perfect.
Anti-stainautomatic.
Extra rinse.
Easy iron.

Features
Self-cleaning detergent drawer.
varioSoft drum system.
Drum interior lighting.
Volume capacity from 1 to 8 kg.
Liquid detergent insert.

Consumption data
Energy efficiency class A+++.
Water consumption 10500 l/year.
Energy consumption 189 kwh/year.

Planning notes
Left-hinged.
Height-adjustable feet.
Height for slide-under installation: 84.8 cm.
Stackable under the tumble dryer WD 260 101 in combination with special accessory.

Connection
Total connected load 2.3 kW.
Connection cable 2.10 m with plug.
Water connection with 3/4 " screw joint.

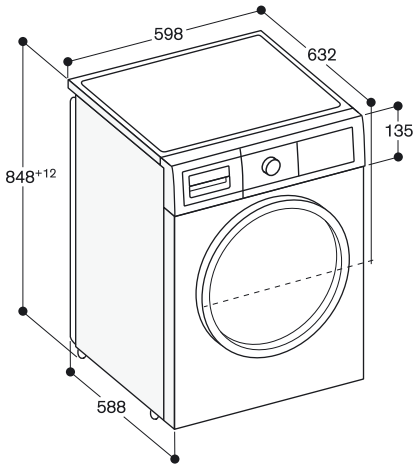

AJMadison
Your Appliance Authority™
800-570-3355

WD 260 101
Free-standing, slide-under or stackable
Width 60 cm, height 84.2 cm

Special accessories
WA 032 001
Connection kit with extendable shelf

Tumble dryer with heat pump
WD 260

- Can be perfectly combined with WM 260 161
- Large drum with interior lighting
- Large porthole with 180 ° door opening angle
- Self-cleaning heat exchanger, highest comfort and constantly low consumption
- Heat pump technology
- Energy consumption A -60%: 60% more economical than the standard value for qualifying for energy efficiency class A

Handling
Electronic control.
Illuminated rotary knob with integrated On-Off switch.
Touch key operation.
TFT display with clear text and symbols.
Programme sequence and remaining time display.
Time delay up to 24 h hours.
Multiple signal tones.

Technical Features
Moisture and time controlled programmes.
Heat pump technology.
Self-cleaning heat exchanger.
Anti-crease cycle at programme end.
Child lock.

Programmes
Cottons/Coloureds.
Easy care.
Mix.
Lingerie.
Wool finish.
Cold 30 minutes.
Warm 30 minutes.
Warm 60 minutes.
Shirts/blouses.
Downs.
Outdoor.
Super 40.
Blankets.
Towels.

Features
Large softDry stainless steel drum.
Volume capacity from 1 to 8 kg.
Drum interior lighting.
Drain set.

Consumption data
Energy efficiency class A.

Planning notes
Right-hinged, reversible.
Height-adjustable feet.
Height for slide-under installation: 84.2 cm.
Stackable over the washing machine WM 260 161 in combination with special accessory.

Connection
Total connected load 1.0 kW.
Connection cable 1.45 m with plug.

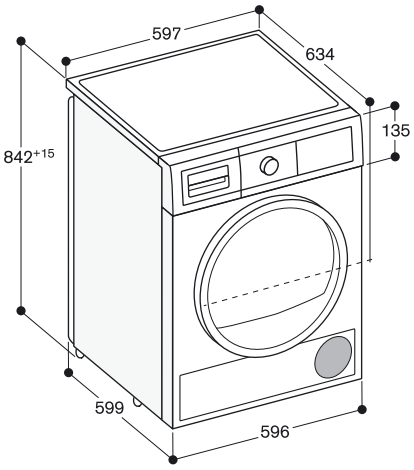

Side view of WD 260 above WM 260 with connection kit WA 032 001

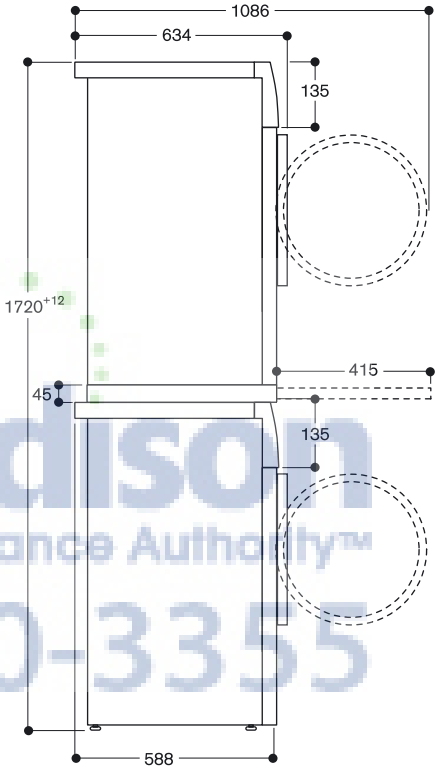

Madison
Your Appliance Authority™
800-570-3355

Washing machine.

Appliance type		Washing machine
White		WM 260 161
Dimensions / capacity		
Width	(cm)	60
Appliance dimensions W x H x D	(mm)	598 x 848 x 632
Appliance height for under-counter	(mm)	848
Door hinge porthole / Door opening angle	(°)	Left / 180°
Capacity	(kg)	8
Consumption data / noise level		
Energy efficiency class		A+++
Spinning efficiency class		A
Total annual energy consumption (220 cycles)*	(kWh)	189
Total annual water consumption (220 cycles)*	(l)	10500
Weighted energy consumption off-mode / left-on mode	(W)	0.5/0.5
Test programme 1		Cottons 60 °C
Test programme 2		Cottons 40 °C
Energy consumption test programme 1 full load / half load / test programme 2 half load	(kWh)	0.99/0.81/0.69
Spin speed test programme 1	(rpm)	400 – 1,600
Cycle time test programme 1 full load / half load / test programme 2 half load	(min)	205/170/170
Noise level washing / spinning test programme 1	(dB)	49/72
Programmes		
Washing programmes		Cottons/Coloureds, cold to 90 °C
		Easy Care, cold to 60 °C
		Quick/Mix 40 °C
		Delicates/Silk, cold to 40 °C
		Wool, cold to 40 °C
		Lingerie
		Shirts/Blouses
		Downs
		Textile Guard
		Super 15
		Dark Wash
		Memory
Special programmes		Outdoor, Rinse, Spin, Soft Spin, Empty
Options		Eco Perfect
		Pre-wash
		Anti-stainautomatic
		Speed Perfect
		Extra rinse, Easy iron, Rinse stop, Water Plus, Silent wash
Cleaning temperatures	(°C)	Cold/30/40/60/90
Features		
Electronic control		•
TFT display with clear text and symbols		•
Loading indicator		•
Dosage recommendation		•
Programme sequence indicator		•
Remaining time display		•
Time delay	(h)	24
End of programme indicator		Display, audible
Aqua sensor / Flow-through sensor		• / •
Continuous automatic load adjustment / Automatic stabilisation		• / •
Aquastop with guarantee		•
Anti-crease system		•
Child lock		•
Self-cleaning detergent drawer		•
Large drum with varioSoft drum system		•
Interior lighting		•
Liquid detergent insert		•
Connection		
Total connected load	(kW)	2.3
Length of connection cable left side / right side	(cm)	130/100
Length of water inlet left side / right side	(cm)	135/100
Length of water outlet left side / right side	(cm)	95/140
Maximum drainage height	(cm)	100

• Standard. * Effective consumption depending on type of use of appliance.

AjMadison
Your Appliance Authority™
800-570-5355

Appliance type		Condenser dryer
White		WD 260 101
Diemension / capacity		
Width	(cm)	60
Appliance dimensions W x H x D	(mm)	597 x 842 x 634
Appliance height for under-counter	(mm)	842
Door hinge porthole / Door opening angle	(°)	Right, reversible / 180°
Capacity	(kg)	8
Consumption data / noise level		
Energy efficiency class		A
Energy consumption		A -60%
Test programme		Cottons/Coloureds cupboard dry
Noise level	(dB)	64
Programmes		
Programmes		Cottons/Coloureds
		Easy Care
		Mix
		Lingerie
		Wool finish
		Cold 30 minutes
		Warm 30 minutes
		Warm 60 minutes
		Shirts/Blouses
		Downs
		Outdoor
		Super 40
		Blankets
		Towels
Options		Eco Perfect
		Memory 1 and 2
		Speed Perfect
		Spin speed, Drying target, Gentle dry
Features		
Electronic control		•
TFT display with clear text and symbols		•
Programme sequence indicator		•
Remaining time display		•
Time delay	(h)	24
End of programme indicator		Display, audible
Heat pump technology		•
Self-cleaning condenser		•
Anti-crease cycle at the end of the programme		•
Child lock		•
softDry stainless steel drum		•
Glass porthole		•
Interior lighting		•
Drain set		•
Connection		
Total connected load	(kW)	1.0
Length of connection cable	cm	145

• Standard.

AjMadison
Your Appliance Authority™
800-570-3355

AjMadison
Your Appliance Authority™
800-570-3355

Accessories

Gastronorm system. 346

Furniture handles. 348

Sink. 349

AjMadison
Your Appliance Authority™
800-570-3355

For usage in the various Gaggenau appliances the following accessories in the Gaggenau Gastronorm system are available.

GN 114 130
Gastronorm insert,
stainless steel, GN 1/3,
unperforated, 40 mm deep, 1.5 l
GN 114 230
Gastronorm insert,
stainless steel, GN 2/3,
unperforated, 40 mm deep, 3 l
GN 124 130
Gastronorm insert,
stainless steel, GN 1/3,
perforated, 40 mm deep, 1.5 l
GN 124 230
Gastronorm insert,
stainless steel, GN 2/3,
perforated, 40 mm deep, 3 l
GN 126 280
Gastronorm insert,
stainless steel, GN 2/8,
perforated, 65 mm deep, 1.3 l

Gastronorm insert
GN 114/124/126

These high-walled, sturdy inserts made from hygienic stainless steel are ideal for cooking with steam and equally practical for storage in the refrigerator or serving at the table. They are dishwasher-proof and easy to clean. For cooking several meals simultaneously, the cooking inserts for Combi-steam and steam ovens in the GN 2/3 format can be combined as required with smaller inserts that are available as special accessories in the GN 1/3 and 2/8 format. For practical food preparation, the inserts fit snugly into any Gastronorm sink.

GN 410 130
Gastronorm lid,
stainless steel, GN 1/3,
for stainless steel gastronorm inserts
GN 410 230
Gastronorm lid,
stainless steel, GN 2/3,
for stainless steel gastronorm inserts

Gastronorm lid
GN 410

The Gastronorm lid may be used to seal the Gastronorm inserts in format GN 1/3 and 2/3. Together they are optimal for storing and keeping fresh of food and dishes in the vario cooling 200 series appliances.

GN 340 230
Gastronorm roaster,
cast aluminium,
GN 2/3, height 165 mm

Gastronorm roaster
GN 340

Gastronorm roaster GN 2/3, height 165 mm. Non-stick coating.
For roasting in the oven with the roasting function or on the induction cooktop. The top and bottom parts can be used as separate ovenproof dishes (100 mm/65 mm deep).
Use in ovens with pull-out system BA 018 103 / BA 016 103 and heating element (order separately).
Also to be used with combi-steam and steam ovens: slide directly into the appliance's side racks.

GN 880 230
Synthetic cutting board GN 2/3,
325 mm long, 352 mm wide
GN 880 280
Synthetic cutting board GN 2/8,
325 mm long, 131 mm wide

Gastronorm cutting board
GN 880

Synthetic cutting board in the sizes GN 2/3 and 2/8.

GN 232 110
Teppan Yaki made of multi ply material,
GN 1/1
For full surface induction hob CX 480
GN 232 230
Teppan Yaki made of multi ply material,
GN 2/3
For full surface induction hob CX 480

Teppan Yaki
GN 232

AiMadison
Your Appliance Authority™
800-570-3355

The Gastronorm system provides the basis for cookware in the professional kitchen. It enables a smooth continuum from the preparation and cooking stages right through to serving at the table and storage. The Gastronorm inserts from Gaggenau have been adapted to match our Vario cooling 200 series, our induction cooktops, our Combi-steam and steam ovens, our ovens as well as our dishwashers. Furthermore, the Gastronorm sink represents yet another valuable addition to the process chain.

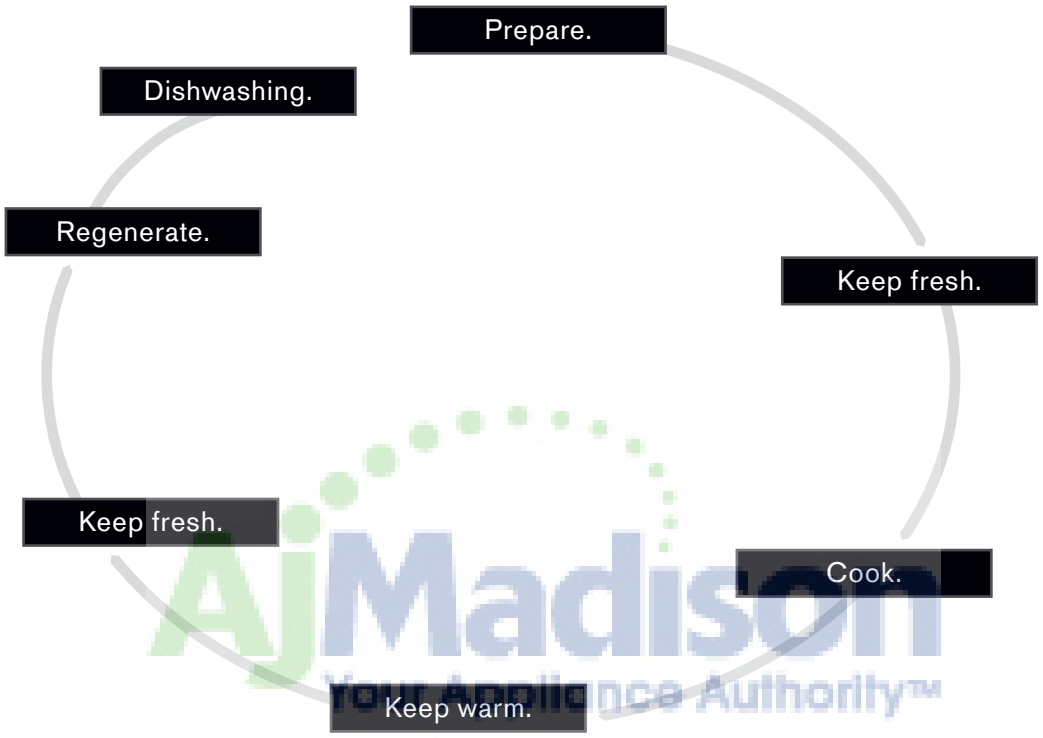

AjMadison
Your Appliance Authority™
800-570-3355

Prepare.

In combination with kitchen sinks in Gastronorm format.

Keep fresh.

With the Vario cooling 200 series appliances.

Cook.

On induction cooktops VI and CI, in our Combi-steam and steam ovens BS or our ovens BO in combination with the pull-out system BA.

Keep warm.

To keep warm in the Gaggenau warming drawers WS.

Regenerate/warm up.

To regenerate in our Combi-steam and steam ovens BS as well as warming up on our induction cook-tops VI and CI or in our ovens BO in combination with the pull-out systems BA.

Dishwashing.

Optimal cleaning and drying of the GN inserts thanks to the GN insert holder.

For the individual design of your furniture fronts, Gaggenau is now offering handle bars matching the Vario cooling appliances and also the new 200 series ovens. Depending on the length, handle bars come with two or three mounts.

Handle bar with 2 mounts

GH 020 010
Handle bar, stainless steel,
Length 20 cm,
drilling distance 177 mm.

GH 020 030
Handle bar, aluminium,
Length 20 cm,
drilling distance 177 mm.

GH 025 010
Handle bar, stainless steel,
Length 25 cm,
drilling distance 277 mm.

GH 025 030
Handle bar, aluminium,
Length 25 cm,
drilling distance 277 mm.

GH 030 010
Handle bar, stainless steel,
Length 30 cm,
drilling distance 277 mm.

GH 030 030
Handle bar, aluminium,
Length 30 cm,
drilling distance 277 mm.

GH 035 010
Handle bar, stainless steel,
Length 35 cm,
drilling distance 327 mm.

GH 035 030
Handle bar, aluminium,
Length 35 cm,
drilling distance 327 mm.

GH 040 010
Handle bar, stainless steel,
Length 40 cm,
drilling distance 377 mm.

GH 040 030
Handle bar, aluminium,
Length 40 cm,
drilling distance 377 mm.

GH 045 010
Handle bar, stainless steel,
Length 45 cm,
drilling distance 427 mm.

GH 045 030
Handle bar, aluminium,
Length 45 cm,
drilling distance 427 mm.

GH 050 010
Handle bar, stainless steel,
Length 50 cm,
drilling distance 477 mm.

GH 050 030
Handle bar, aluminium,
Length 50 cm,
drilling distance 477 mm.

GH 060 010
Handle bar, stainless steel,
Length 60 cm,
drilling distance 577 mm.

GH 060 030
Handle bar, aluminium,
Length 60 cm,
drilling distance 577 mm.

GH 070 010
Handle bar, stainless steel,
Length 70 cm,
drilling distance 677 mm.

GH 070 030
Handle bar, aluminium,
Length 70 cm,
drilling distance 677 mm.

GH 080 010
Handle bar, stainless steel,
Length 80 cm,
drilling distance 777 mm.

GH 080 030
Handle bar, aluminium,
Length 80 cm,
drilling distance 777 mm.

GH 090 010
Handle bar, stainless steel,
Length 90 cm,
drilling distance 877 mm.

GH 090 030
Handle bar, aluminium,
Length 90 cm,
drilling distance 877 mm.

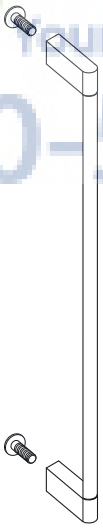

Handle bar with 3 mounts

GH 110 010
Handle bar, stainless steel,
Length 110 cm,
Drilling distance 538.5 mm each.

GH 110 030
Handle bar, aluminium,
Length 110 cm,
Drilling distance 538.5 mm each.

GH 120 010
Handle bar, stainless steel,
Length 120 cm,
Drilling distance 588.5 mm each.

GH 120 030
Handle bar, aluminium,
Length 120 cm,
Drilling distance 588.5 mm each.

GH 140 010
Handle bar, stainless steel,
Length 140 cm,
Drilling distance 688.5 mm each.

GH 140 030
Handle bar, aluminium,
Length 140 cm,
Drilling distance 688.5 mm each.

GH 160 010
Handle bar, stainless steel,
Length 160 cm,
Drilling distance 788.5 mm each.

GH 160 030
Handle bar, aluminium,
Length 160 cm,
Drilling distance 788.5 mm each.

GH 180 010
Handle bar, stainless steel,
Length 180 cm,
Drilling distance 888.5 mm each.

GH 180 030
Handle bar, aluminium,
Length 180 cm,
Drilling distance 888.5 mm each.

GH 200 010
Handle bar, stainless steel,
Length 200 cm,
Drilling distance 988.5 mm each.

GH 200 030
Handle bar, aluminium,
Length 200 cm,
Drilling distance 988.5 mm each.

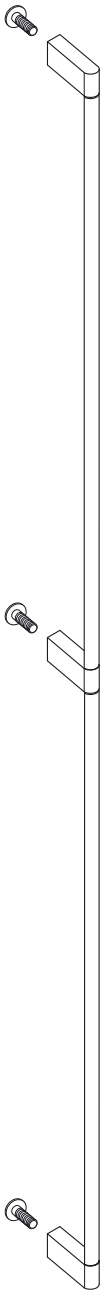

AjMadison
Your Appliance Authority™
800-570-3355

GN 710 110
Stainless steel
Width 557 mm, Depth 349 mm

GN 710 280
Stainless steel
Width 321 mm, Depth 128 mm

Special accessories

GN 880 230
Synthetic cutting board GN 2/3
325 mm long, 352 mm wide.

GN 880 280
Synthetic cutting board GN 2/8
325 mm long, 131 mm wide.

GN 114 130
Stainless steel cooking insert GN 1/3
Unperforated, 40 mm deep, 1.5 l.

GN 114 230
Stainless steel cooking insert GN 2/3
Unperforated, 40 mm deep, 3 l.

GN 124 130
Stainless steel cooking insert GN 1/3
Perforated, 40 mm deep, 1.5 l.

GN 124 230
Stainless steel cooking insert GN 2/3
Perforated, 40 mm deep, 3 l.

GN 126 280
Stainless steel cooking insert GN 2/8
Perforated, 65 mm deep, 1.3 l.

Sink
GN 710

- For flush or under-counter installation
- Work at two levels: in the sink itself or in the cooking insert
- Compatible with all accessories in Gastronorm (GN) dimensions
- Any possible combination with 2 sink sizes

Interior dimensions of large sink:
W 541 x H 175 x D 333 mm.
For cooking inserts GN 2/8, 1/3 or 2/3.
For cutting boards GN 2/3 or 2/8.

Interior dimensions of small sink:
W 305 x H 75 x D 112.5 mm.
For cooking insert GN 2/8.
For cutting board GN 2/8.

Planning notes
Full set of installation material for flush or under-counter installation included.
Complete set of accessories for the water outlet with drain eccentric included.
Drill diameter to install the eccentric is 35 cm (large sink).
Can be installed in a 60 cm wide lower cabinet.
For flush installation a recess in the worktop and for the overflow must be provided.
Because of dimensional tolerances, we recommend to verify the sink dimensions before installation.

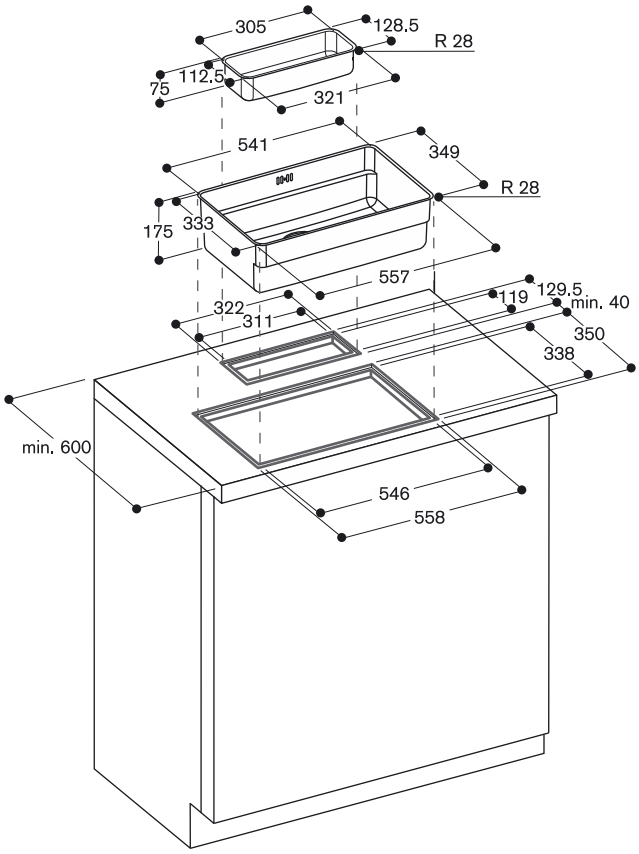

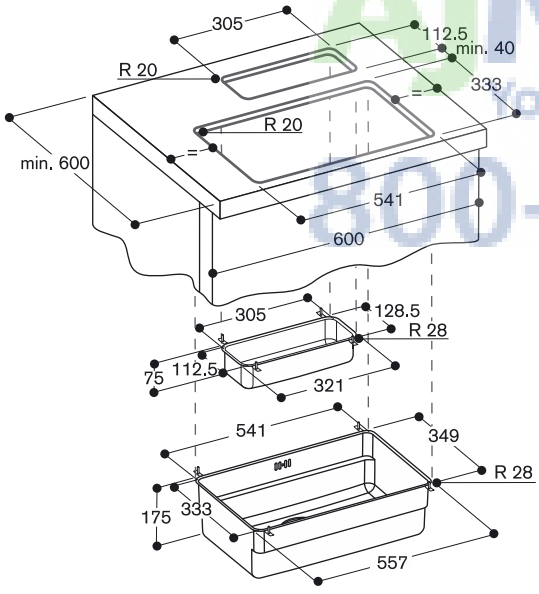

GN 710 110 cut-out dimensions for installing flush with surrounding surfaces

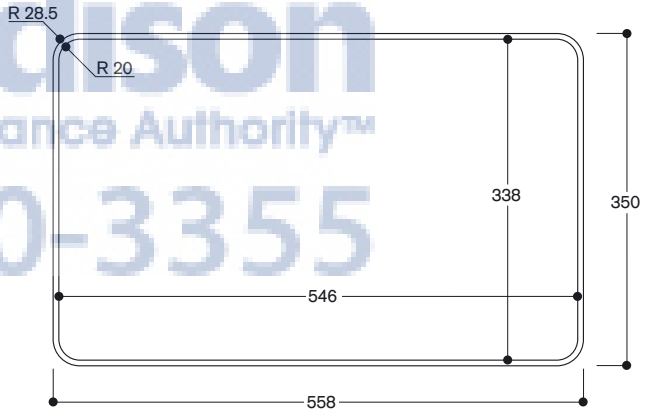

GN 710 280 cut-out dimensions for installing flush with surrounding surfaces

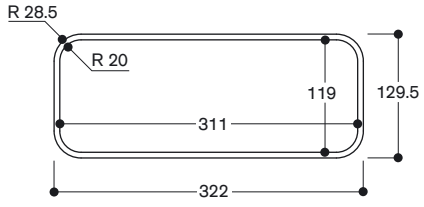

Fitting retaining bracket when installing from below

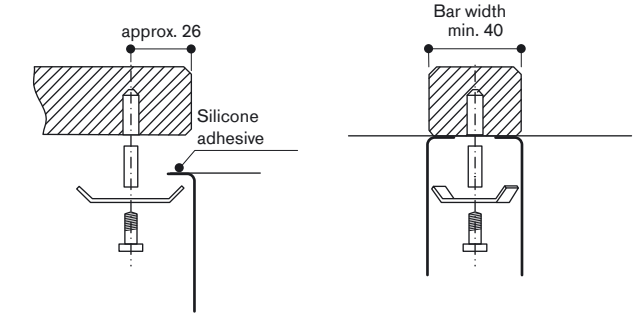

Recess measurement for installing flush with surrounding surfaces

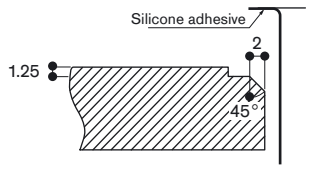

Overflow recess

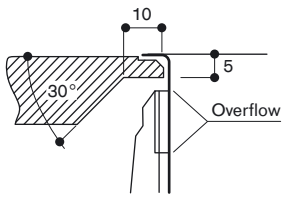

AiMadison
Your Appliance Authority™
800-570-3355

AjMadison
Your Appliance Authority™
800-570-3355

© Copyright by
Gaggenau Hausgeräte GmbH
P.O. Box 830101
81701 Munich

Edition 2013.

The data and facts expressed herein are current as of December 2012. Gaggenau reserves the right to implement technical modifications that serve the purpose of progress.

The appliances are for household use only.

Certain appliances in this brochure are not available in all countries. Please contact your Gaggenau supplier for details.

AjMadison
Your Appliance Authority™
800-570-3355

Q9G1LA0172

International Enquiries:

Gaggenau Hausgeräte GmbH
P.O. Box 830101
81701 Munich
Germany
www.gaggenau.com

AjMadison
Your Appliance Authority™
800-570-3355

GAGGENAU