VIGO

http://www.vigoindustries.com
1-866-591-7792

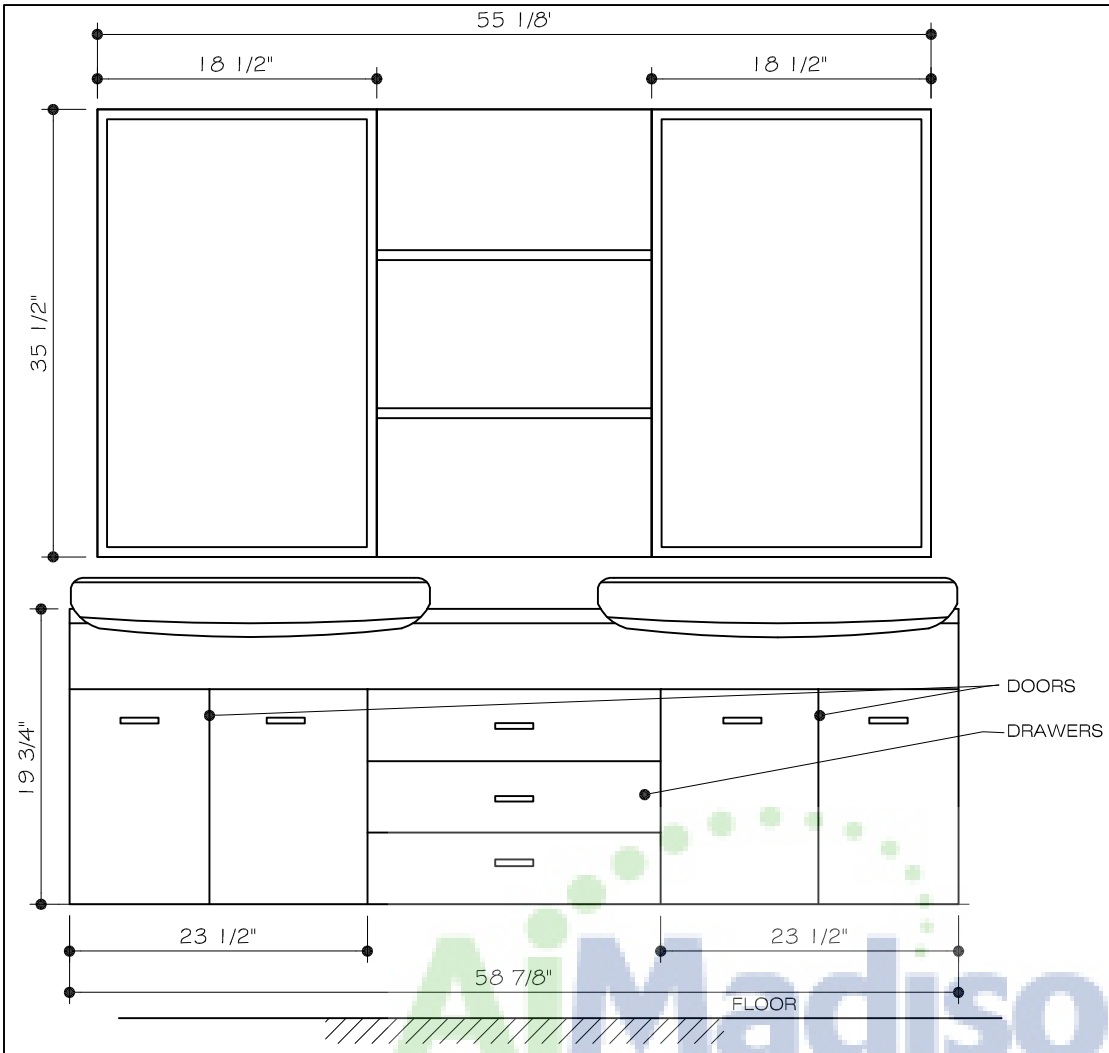

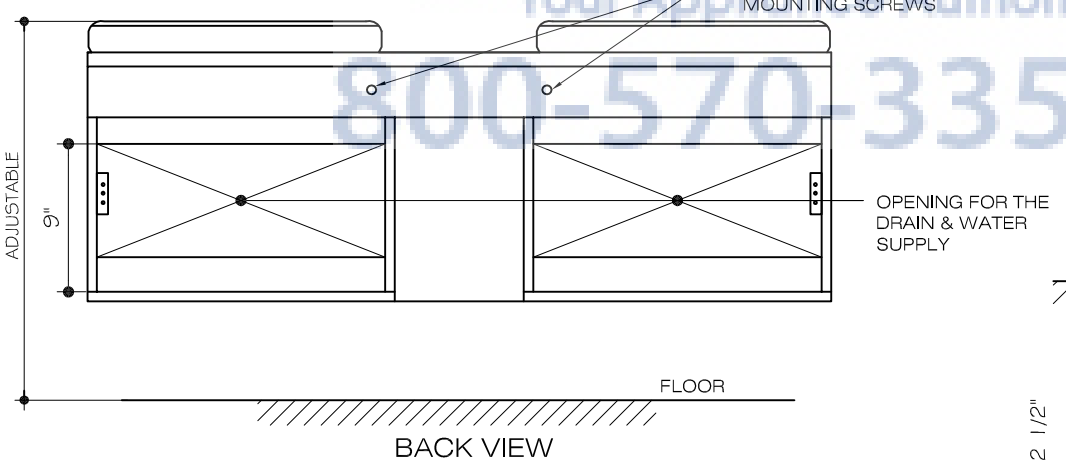

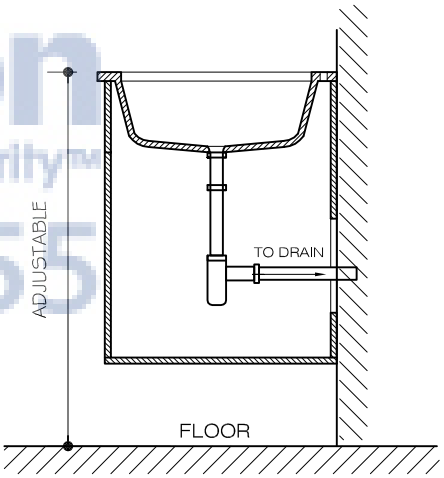

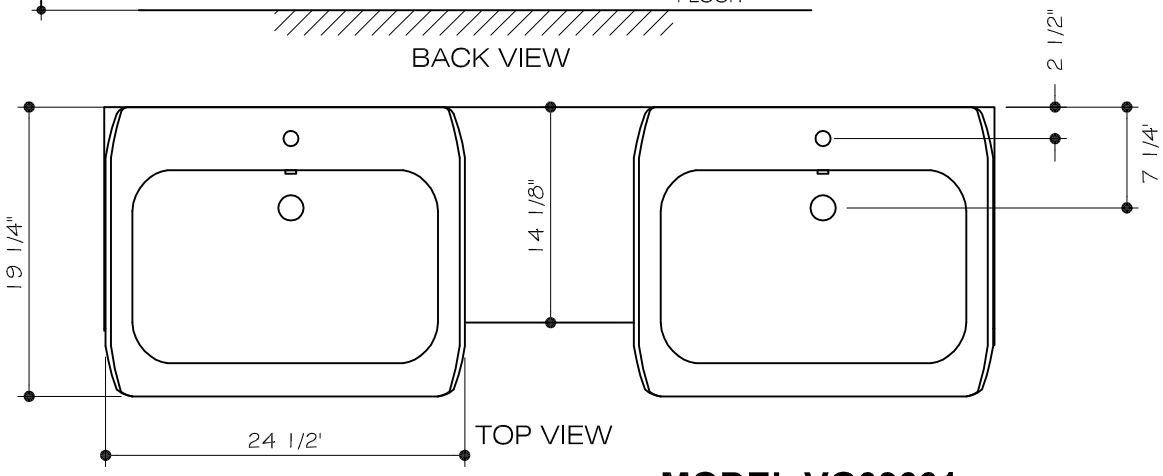

AiMadison
Your Appliance Authority™
800-570-3355

MODEL VG09001

THE MEASUREMENTS IN INCHES ARE ROUNDED TO THE NEAREST 1/8"

http://www.vigoindustries.com
1-866-591-7792

PACKAGE CONTENT

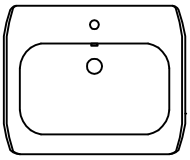

LAVATORY (2PC.)

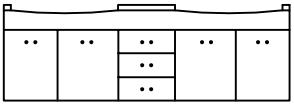

VANITY & COUNTERTOP

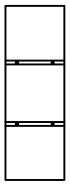

SHELF BASE

SHELVES (2PC.)

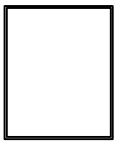

MIRROR (2PC.)

MOUNTED SCREWS ARE INCLUDED

MAINTENANCE

To ensure that your installation project goes smoothly, please review these instructions before proceeding.

Your new lavatory is designed for years of trouble-free performance. Keep it looking new by cleaning it periodically with a soft cloth. Avoid abrasive cleaners, steel wool and harsh chemicals.

NOTE: INSTALLATION MUST BE DONE BY A QUALIFIED, LICENSED PLUMBER.

TOOLS NEEDED

Adjustable wrench
Plumber's putty or Caulking
Pipe tape
Flat screwdriver
Hex keys
Drill
Tape Measure
Tubing Cutter or Hacksaw
Regular and Philips Screw Driver
Caulking gun

SAFETY TIPS

Observe all local plumbing and building codes.
Risk of personal injury or product damage. Handle with care.
Prior to installation, unpack the new vanity and inspect it for damage. Return the vanity to its protective carton until you are ready to install it.
Inspect the drain and supply tubing. Replace if necessary.
Do not substitute another sealant if one is supplied with this vanity.

For additional assistance visit:

http://www.vigoindustries.com

REMOVING YOUR OLD LAVATORY

Turn off the water supply. This is done by closing the two shut-off valves located under the lavatory.
If there are no shut-off valves leading to the lavatory, you must turn off the water at the main valve. This is usually located in the basement, garage or near the foundation on the outside of the house. It may also be near the water meter.
Check to be sure the water is off by turning on the faucet where you are working until the water stops flowing.
If you have shut off the main valve in a two-story house or greater, you should open the kitchen faucet
and another faucet on the same level. Water will then drain from the entire line. This will help avoid spills.
Be sure and close the faucets before you turn on the main valve again.
Disconnect the drain pipes. Take off as many sections as possible between the lavatory and the wall or floor to facilitate removal.
Place a basin under the work area to catch any water that may still be in the drain.

ASSEMBLY

1. Once the product has been unpacked your first step will be to assemble the unit. Select the vanity location and mark holes on the wall for mounting screws. Remove vanity, drill holes, stick anchors and screw unit to the wall. Unscrew handles from the vanity and screw them to the drawers and to the vanity doors from the front side.

2. Silicone the lavatories to the countertop, align it and press down firmly. Note: It could be up to 3/8 inch gap in front of the lavatory between front of the vanity and lavatory .
Install the drain assembly. Connect tailpiece to the drain.

3. This vanity requires two separate drain installations. Connect trap to drain assembly. After you are finished assembly should look like figure 3. Repeat this step for another drain.

4. For specific faucet installation instructions refer to the Faucet manufacture's. Connect supply line to faucet.

5. Screw shelves to the shelf base. Select the mirror and shelf location and mark holes on the wall for mounting screws. Drill holes and stick anchors. Hang up the mirrors and the shelf.

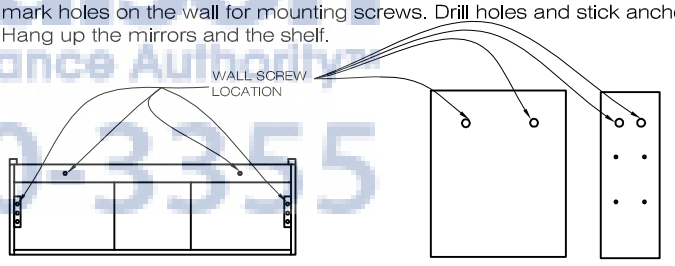

1

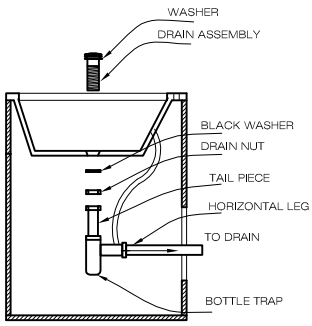

2

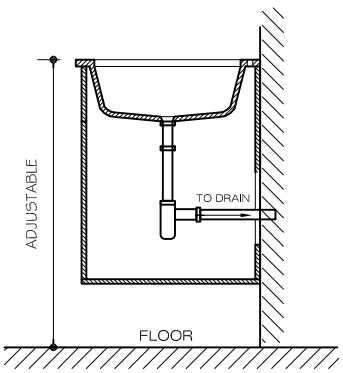

3

AJMadison
Your Appliance Authority!
800-570-3355

VIGO INDUSTRIES, LLC ("VIGO")
VANITY LIMITED WARRANTY

EFFECTIVE JANUARY 1, 2010

VIGO offers the following limited warranty on each of its Vanity products* (the "Product") and the components thereof. This warranty extends only to the original owner or end-user for personal household use. For commercial uses, additional limitations apply.

VIGO warrants the Product to be free from defects in workmanship and materials under normal use and service for a period of five (5) years from the initial date of purchase by the owner or end-user, contractor, or builder, from VIGO or an authorized VIGO dealer.

Subject to the Warranty Service provision below, any product reported to the authorized dealer or to VIGO as being defective within the warranty period will be repaired or replaced (with a product of equal value) at the option of VIGO. This warranty extends to the original owner or end-user and is not transferable to a subsequent owner.

Neither the distributor, authorized VIGO dealer, nor any other person has been authorized to make any affirmation, representation, or warranty other than those contained in this warranty. Any affirmation, representation, or warranty other than those contained in this warranty shall not be enforceable against VIGO or any other person.

VIGO reserves the right to modify this warranty at any time, it being understood that such modifications will not alter the warranty conditions applicable at the time of sale of the products in question.

Limitations
This warranty shall not apply to instances of incorrect operating procedures, breakages, or damages caused by fault through improper installation, carelessness, abuse, misuse, misapplication, improper maintenance, or alteration of the Product, as well as chemical or natural corrosion, accident, fire, flood, an act of God, or any other casualty. Avoid abrasive cleaners, steel wools, and harsh chemicals as these will scratch, damage, and / or dull the product and / or finish and void this warranty. The owner/end-user of the Product covered by the present warranty is entirely responsible for its proper installation and any applicable plumbing or electrical wiring. VIGO neither installs nor supervises the installation nor hires a contractor for this purpose; consequently, VIGO cannot be held responsible for any default, breakage, or damages caused thereby or resulting thereof, either directly or indirectly.

The owner/end-user must provide access to the components of the Product as described in the installation guide so that VIGO can execute the warranty specified herein. If such access is not available, all expenses to provide said access will be the responsibility of the owner/end-user.

This warranty does not apply to Products that have not been installed or operated in accordance with instructions supplied by VIGO and all applicable rules, regulations, and legislation pertaining to such installations.

This warranty does not apply unless the VIGO Product is installed by fully insured licensed professionals. Vigo strongly recommends that such licensed professionals have experience in the installation of bathroom and kitchen products. Installation of certain products, including, without limitation, glass products (i.e., shower doors and glass sinks) by an inexperienced person may result in glass breakage and, consequently, cause personal injury or death.

VIGO is not liable for personal injuries or deaths to any persons or for any direct, special, incidental, or consequential damage, loss of time, loss of profits, inconvenience, incidental expenses, labor or material charges, or any other costs resulting from the use of the product or equipment or pertaining to the application of the present warranty, or resulting from the removal or replacement of any product or element or part covered by this warranty.

EXCEPT AS OTHERWISE PROVIDED ABOVE, VIGO MAKES NO WARRANTIES, EXPRESSED OR IMPLIED, INCLUDING WARRANTIES OF MERCHANTABILITY AND FITNESS FOR A PARTICULAR PURPOSE OR COMPLIANCE WITH ANY CODE.

In any case, VIGO cannot be held liable for any amount over and above the purchase price paid for the Product by the owner/end-user, contractor, or builder.

Commercial Limitations
In addition to the above conditions and limitations, the warranty period for products installed for commercial applications or used in commercial ventures is one (1) year from the initial date of purchase by the owner/end-user, contractor, or builder from an authorized dealer. VIGO is not responsible for loss of use or profit under any circumstances. If the product is used as a display, the warranty period begins when the product is placed on display. This warranty gives the owner/end-user specific legal rights. The owner/end-user may also have other rights which can vary from one state or province to another.

Warranty Service
In order to obtain service provided under this warranty during regular business hours, contact the dealer or distributor who sold the unit, or contact VIGO directly. VIGO will provide the warranty service described above when the following conditions have been met: the failure is of the nature or type covered by the warranty; the user has informed an authorized VIGO Agent or VIGO's warranty service department representative of the nature of the problem during the warranty period; conclusive evidence (e.g., proof of purchase or installation) is provided to the foregoing by the user proving that the failure occurred or was discovered within the warranty period; an authorized independent service person or company representative has been permitted to inspect the product during regular business hours within a reasonable time after the problem was reported by the user. VIGOs warranty obligation shall be discharged upon tender of replacement or repair. The customer's refusal to accept the tender terminates VIGO's warranty obligations.

*Certain models are pending approval. Certification may be ended by VIGO or certification agencies without notice.

AJMadison
Your Appliance Authority™
800-570-3355