30" GAS COOKTOP SPECIFICATIONS

DIMENSIONS & WEIGHT		
External	Width	30"
	Depth	21 11/16"
	Height	3 3/4"
Cut-out	Width Cutout	28 1/2"
	Depth Cutout	19 11/16"
Packaging	Width Package	34 9/16"
	Depth Package	26"
	Height Package	10 1/2"
Minimum Spacing to Back Wall		2 3/4"
Minimum Spacing to Left Wall		11"
Minimum Spacing to Right Wall		11"
Minimum Front Countertop Clearance		1 5/8"
Weight	Net Weight	44.53 lbs (20.2 kg)
	Shipping Weight	53.57 lbs (24.3 kg)

INFORMATION	
Model	UPCG3054ST
SMART FUNCTION	
Wi-Fi	Yes
BASIC	
Color	Stainless Steel
Burner Control	Knob Control (Red LED Back Lighting)
COOKTOP	
Burner Type	Sealed Burners Brass Burner
Fuel Type	LNG / LPG
Grates	Continuous, Dishwasher Safe
# of Grates	3
Knobs	Push & Turn
Knobs Material	Aluminum
# of Burners	5
Burner Power	
- Left Rear	9,100 / 9,100 BTU/h
- Right Rear	5,000 / 5,000 BTU/h
- Center Rear	19,000 / 15,000 BTU/h
- Left Front	9,100 / 9,100 BTU/h
- Right Front	12,000 / 9,500 BTU/h
POWER	
Electric Supply	120 V / 60Hz AC
ACCESSORIES	
Griddle Plate	1
WARRANTY	
Limited Warranty	3 Year

DIMENSIONS AND CLEARANCES

Provide enough clearances between the cooktop and adjacent combustible surfaces. These dimensions must be met for safe use of your cooktop. The location of the Electrical outlet and pipe opening may be adjusted to meet specific requirements. The cooktop may be placed with 2 3/4" clearance to the back wall.

- Maintain the Following Minimum Clearance Dimensions

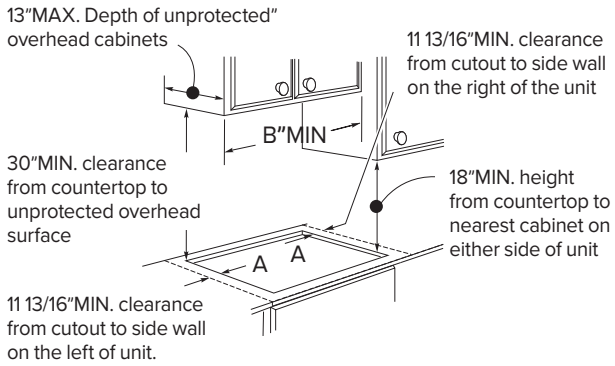

- Cooktop and Cutout Dimensions

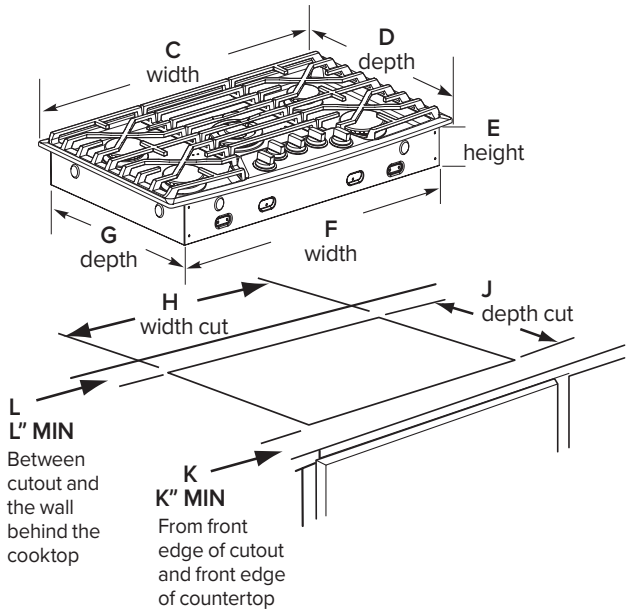

To ensure accuracy, it is best to make a template when cutting the opening in the counter

MODEL	A	B	C	D	E	F	G	H	J	K	L
UPCG3054ST	11 13/16"	30"	30"	21 11/16"	3 3/4"	28 1/4"	19 3/8"	28 1/2"	19 11/16"	1 5/8"	2 3/4"
UPCG3654ST	11 13/16"	36"	36"	21 11/16"	3 3/4"	33 5/8"	19 3/8"	33 15/16"	19 11/16"	1 5/8"	2 3/4"