T36BT112NS

36-INCH BUILT-IN FRENCH DOOR BOTTOM FREEZER REFRIGERATOR, 2 DRAWER, PRE-ASSEMBLED

FREEDOM® COLLECTION, MASTERPIECE® COLLECTION HANDLES



Also Available In:
T36IT102NP – Panel-Ready
T36BT122NS – Pre-Assembled with Professional Handles

FEATURES & BENEFITS

- Adjustable shelves and easy-to-clean all-metal door bins, including a designated gallon bin—maximize storage capacity while providing stylish, long-lasting functionality
- ★ - Overhead Skylight™ and side wall LEDs cast brilliant, multi-directional light, eliminating shadows and making all items easy to find
- ★ - Automatic theater lighting senses ambient light and time of day, delivering glare-free brightness every time you open
- ★ - Freeze, Chill, Store, the ThermaFlex® Drawer allows you to flex the temperature as a refrigerator or freezer space for maximum versatility
- ★ - ThermaFresh® Pro Drawers let you set optimal temperature and humidity levels, while the integrated ethylene absorber slows ripening, keeping produce fresh longer
- ★ - Produces signature Diamond Ice to keep drinks cold and make a lasting impression with a quick ice function providing up to 33% more ice for unexpected moments*
- Our interior water dispenser preserves the sleek exterior, while the UltraClarityPro® filter removes 99% of impurities for pure, cool water with 6 precise, customizable auto-fill options
- Dual compressors and evaporators ensure precise temperatures and independent airflow for advanced cooling performance
- ★ - Automatic SuperFreeze® detects warm groceries and drop the temperature down to -15°F (-26°C), rapidly refreezing softening ice creams, meats, and groceries

STYLE	
Door Style	Stainless Steel Panel
Handle Style	Masterpiece®
Interior Finish	Stainless Steel
INNOVATION	
Wi-Fi-Enabled for Control w/Home Connect® App	Yes
Remote Monitoring and Control	Yes
Remote System Upgrade	Yes
2 Drawer Design	Yes
Overhead Skylight™ and Side Wall LEDs	Yes
Auto-Dim Illumination	Yes
PERFORMANCE	
ThermaFresh® Pro	Yes
Dual Compressor	Yes
Dual Evaporators	Yes
Automatic Defrosting	Yes
Modes	
Eco, Sabbath, Shopping, Vacation, Demo, Quick Ice, SuperCool, SuperFreeze®	
Internal Water Dispenser	Yes
Automatic Water Refill	Yes, 6 Custom Favorites
UltraClarityPro® Water Filter (6 Months)	Yes
Air Fresh Filter	Yes
Ethylene Filter (6 Months)	2
CAPACITY AND STORAGE	
Total Capacity (cu. ft.)	18.8 cu. ft.
Refrigerator Capacity (cu. ft.)	12.7 cu. ft.
Freezer Capacity (cu. ft.)	6.1 cu. ft.
Ice Maker Drawer Capacity (cu. ft.)	0.92 cu. ft.
ThermaFlex® Drawer Capacity (cu. ft.)	2.2 cu. ft.
Full-Extension Freezer Storage Drawer	2 Tier
Full-Extension Icemaker Drawer	1
Full-Extension ThermaFlex® Drawer	1
ThermaFlex® Drawer Modes	
Freezer (0°F) (-18°C), Soft Freeze (10°F) (-12°C), Meat/Fish (30°F) (-1°C), Beverage (34°F) (1°C), Deli and Cheese (34°F) (1°C), Fridge (37°F) (3°C), Pastry (39°F) (4°C)	
Full Extension ThermaFresh® Pro Drawers	2
ThermaFresh® Pro Drawer Modes (°F/Humidity)	
Vegetables (32°F (0°C)/High), Fruit (32°F (0°C)/Low), Meat (30°F (-1°C)/Low), Fish (30°F (-1°C)/Low), Deli (34°F (1°C)/Low), Cheese (35°F (2°C)/Low), Beverages (34°F (1°C)/Low), Mixed (32°F (0°C)/Low), Charcuterie (35°F (2°C)/Low)	

*Increased ice output rates for Entertaining Ice production during a 24-hour period using Quick Ice mode versus standard production. When bin was full; ice maker automatically shut down and ice was removed to secondary drawer. Actual rates may vary depending on water pressure, fill level, and temperature.

T36BT112NS
36-INCH BUILT-IN FRENCH DOOR BOTTOM FREEZER REFRIGERATOR, 2 DRAWER, PRE-ASSEMBLED
FREEDOM® COLLECTION, MASTERPIECE® COLLECTION HANDLES

CAPACITY AND STORAGE (CONTINUED)	
Storage Shelves	4 Adjustable, 1 Fixed
Hanging Deli Drawer	1
Standard Door Bins	4 Adjustable
Gallon Door Bins	2 Fixed
GENERAL FEATURES	
Color Touch Screen Control Panel	Yes
Water Filter Replacement Indicator	Yes
Single Ice Maker w/Diamond Ice	Yes
Ice Production (24 Hrs.), Diamond Ice (lbs.)	4.5
Ice On/Off	Yes
Quick Ice	Yes
Ice Storage Capacity (lbs.)	3.2
LED Interior and Drawer Lighting	Yes
Independent Cooling Systems	2
Open Door Assist	No
Open Door Alarm	Yes
Childproof Lock	Yes
Cooling System	Free Flow™ Cold Air
Maximum Sound Level	39 dBA
SoftClose™ Door	Yes
SoftClose™ Drawers	Yes
Star-K Certified Sabbath Mode	Yes
ENERGY STAR® Certified	Yes
Annual Energy Consumption	584 kWh / yr*
OPERATING TEMPERATURE	
Refrigerator: 33°F (1°C) to 43°F (6°C)	
Freezer Drawers: -7°F (-22°C) to 6°F (-14°C)	
ThermaFlex® Drawer: 7 Preset Modes	
ThermaFresh® Pro Drawers: 10 Preset Modes	
SuperCool: 34°F (1°C) for Approximately 8 Hours	
SuperFreeze®: -15°F (-26°C) for Approximately 8 Hours	
INSTALLATION FEATURES	
Four Point Front Adjustable with 4 Wheels	Yes
Attachment Method to Cabinetry	
4 Fixation Brackets, Fixed at 4 Corners of Appliance, No Visible Screws	
Front Serviceable	Yes
Anti-tip Bracket Included	Yes
Stainless Steel Frame Kit Included	Yes

TECHNICAL SPECS	
Required Power Supply	110-120 V, 60 Hz, 15 Amp
Plug Type	3-Prong
Power Cord Length (Inches)	118"
DIMENSIONS AND WEIGHT	
Overall Width (Inches)	35 1/4"
Overall Height (Inches)	83 7/8" Min. 85 1/2" Max.
Overall Depth Without Panel or Handles (Inches)	24"
Overall Depth With Panel (Inches)	24 3/4"
Overall Depth with Panel and Handles (Inches)	26 7/8"
Required Cutout Size (HxWxD) (Inches)	84" x 35 1/2" - 36" x 24"
Net Weight (Approx.) (lbs.)	586 lbs.
Gross Weight (Approx.) (lbs.)	628 lbs.
OPTIONAL ACCESSORIES	
Replacement UltraClarityPro® Water Filter	REPLFLTR55
Replacement Ethylene Starter Kit (Part No.)	17006999
Replacement Ethylene Filter Packets (Part No.)	17007000
Water Filter Bypass (Part No.)	11049963
Combination Kit	COMBIKIT10
Retrofit Combination Kit	COMBIKIT20
WARRANTY	
Limited Warranty, Entire Appliance, Parts & Labor	2 Years
Limited Warranty, Sealed Refrigeration System†, Parts & Labor	3rd to 6th Year
Limited Warranty, Sealed Refrigeration System†, Parts Only	7th to 12th Year
Limited Warranty for Rust-Through on Stainless Steel Door and Inner Liner, Parts Only	Lifetime
SUPPLEMENTAL MATERIAL	
CAD File	Click Here to Download
Installation Manual	Click Here to Download
Use & Care Guide	Click Here to Download
Warranty	Click Here to Download
Energy Guide	Click Here to Download
Home Connect® Quick Start Guide	Click Here to Download

PFAS

*Estimated annual energy consumption. Exact usage may vary.
†Sealed refrigeration system includes compressor, evaporator, condenser, dryer/strainer and connection tubing

T36BT112NS
36-INCH BUILT-IN FRENCH DOOR BOTTOM FREEZER REFRIGERATOR, 2 DRAWER, PRE-ASSEMBLED
FREEDOM® COLLECTION, MASTERPIECE® COLLECTION HANDLES

FLUSH INSTALL CUTOUT DIMENSIONS

Measurements in inches (mm)

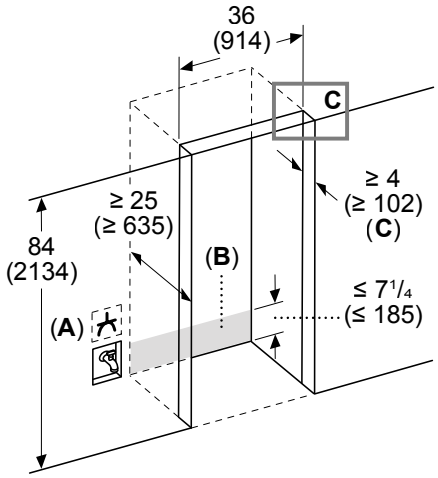

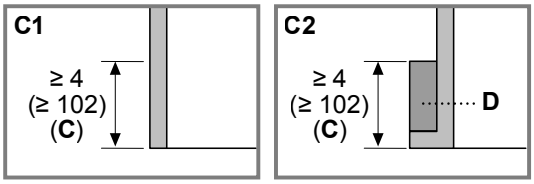

A: Socket
B: Area for water and electric line routing

C: Furniture return
C1: Frameless cabinet
C2: Framed cabinet

D: Filler

PLANNING NOTES

Recess Depth: The refrigerator is fully flush integrated when installed in a 25" (635mm) deep cabinets with a typical panel thickness of 3/4" (19mm). Recess depth depends on kitchen design and panel thickness. Remove the pre-assembled frame for flush installation.

Electrical Supply: The electrical supply outlet (A) is recommended to be located in an adjacent cabinet for safety and serviceability. If it is not possible due to the construction to connect the appliance to a power outlet next to it (A), connect the appliance to a power outlet behind the appliance (B). This alternative position of the power outlet is permissible only if you can switch off the outlet with a circuit breaker in the fuse box.

Water Supply: A cold water supply is required for water dispenser and icemaker operation. Water pressure must be between 29 and 116 p.s.i. The water supply is recommended to be located in an adjacent cabinet or other area that can be accessed after the appliance is installed.

Furniture Return: The interior sides of the furniture return (C) will be partially visible when the refrigerator door is opened. Top and side returns should be finished to match the exterior furniture at a minimum depth of 4" (102 mm). Ensure that the side walls of the cutout (C) are completely flush to a depth of at least 4" (102 mm).

FLUSH INSTALL TOP VIEW CLEARANCES

Measurements in inches (mm)

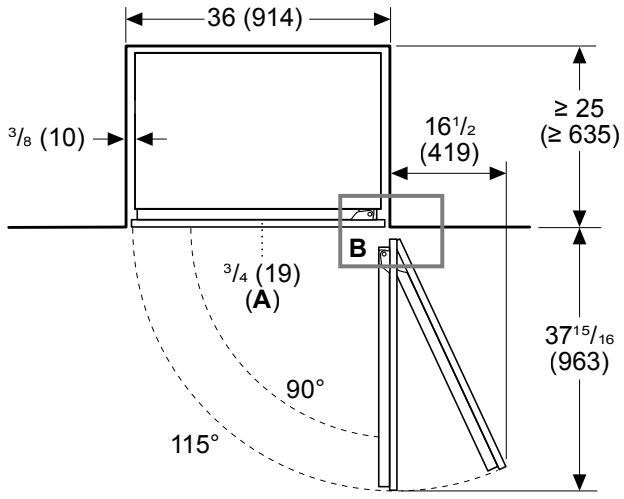

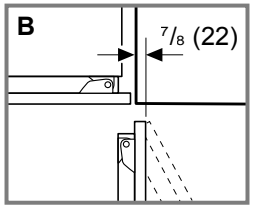

A: Panel

PLANNING NOTES

Door Panels & Handles: Clearance dimensions are based on a door panel (A) thickness of ¾" (19mm). Additional clearances must be added for handles and door panels thicker than ¾" (19mm).

Clearance Requirements: The required clearances for the maximum door opening angle of 115˚ should be followed. The minimum required clearance to fully access all compartments is 90˚ door opening (B).

T36BT112NS
36-INCH BUILT-IN FRENCH DOOR BOTTOM FREEZER REFRIGERATOR, 2 DRAWER, PRE-ASSEMBLED
FREEDOM® COLLECTION, MASTERPIECE® COLLECTION HANDLES

PROUD INSTALL CUTOUT DIMENSIONS

Measurements in inches (mm)

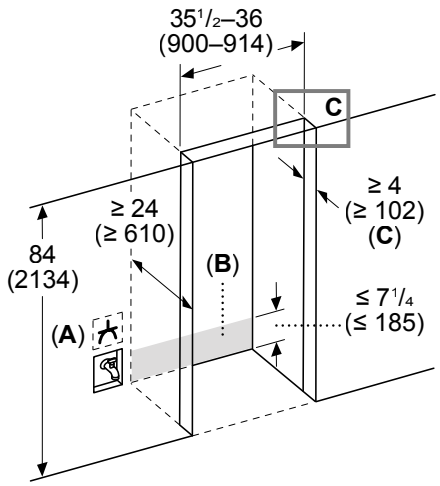

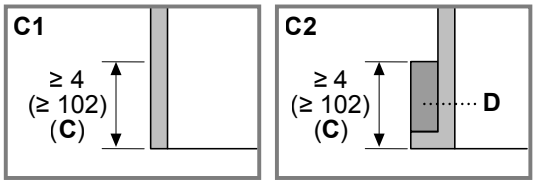

A: Socket
B: Area for water and electric line routing

C: Furniture return
C1: Frameless cabinet
C2: Framed cabinet

D: Filler

PLANNING NOTES

Width: The minimum required cutout width is 35 1/2" (900 mm).

Depth: The minimum required cutout depth is 24" (610 mm). The refrigerator door panels will protrude slightly for a proud install.

Electrical Supply: The electrical supply outlet (A) is recommended to be located in an adjacent cabinet for safety and serviceability. If it is not possible due to the construction to connect the appliance to a power outlet next to it (A), connect the appliance to a power outlet behind the appliance (B). This alternative position of the power outlet is permissible only if you can switch off the outlet with a circuit breaker in the fuse box.

Water Supply: A cold water supply is required for water dispenser and icemaker operation. Water pressure must be between 29 and 116 p.s.i. The water supply is recommended to be located in an adjacent cabinet or other area that can be accessed after the appliance is installed.

Furniture Return: The metal frame hides unfinished case returns for existing cabinetry that has not been custom built to accommodate the appliance. Ensure that the side walls of the cutout (C) are completely flush to a depth of at least 4" (102 mm).

PROUD INSTALL TOP VIEW CLEARANCE

Measurements in inches (mm)

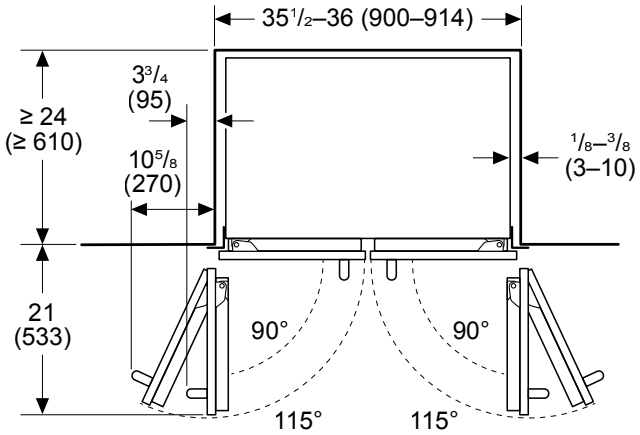

PLANNING NOTES

Door Panels & Handles: Clearance dimensions are based on a door panel (A) thickness of ¾" (19mm). Additional clearances must be added for handles and door panels thicker than ¾" (19mm).

Clearance Requirements: Clearance dimensions are based on factory installed stainless steel door panels and handles.

T36BT112NS
36-INCH BUILT-IN FRENCH DOOR BOTTOM FREEZER REFRIGERATOR, 2 DRAWER, PRE-ASSEMBLED
FREEDOM® COLLECTION, MASTERPIECE® COLLECTION HANDLES

PRODUCT AND PANEL DIMENSIONS

Measurements in inches (mm)

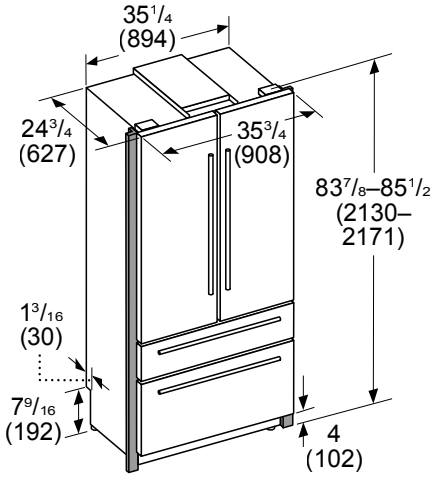

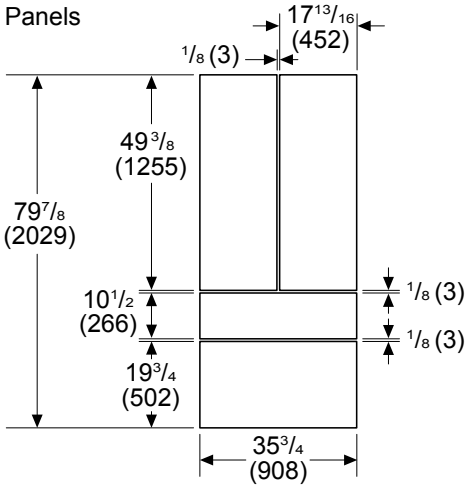

PLANNING NOTES

Adjustable Height: The appliance height is adjustable. Recommended height for a standard 84" niche is 83 7/8". The minimum height with leveling legs fully retracted is 83 7/8". The maximum height with leveling legs fully extended is 85 1/2".

Rear Appliance Recess: The recessed area at the base can be used for routing water and electric supply lines to the appliance.

HINGE CLEARANCE

Measurements in inches (mm)

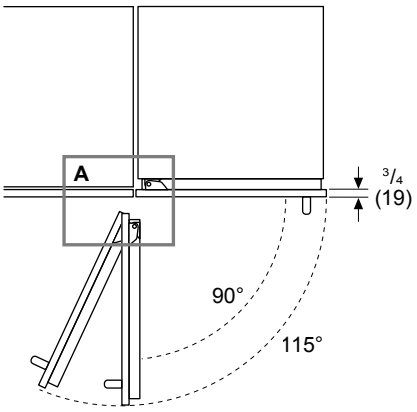

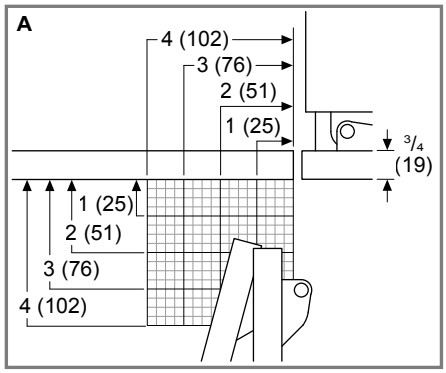

TIPPING RADIUS CLEARANCES

PLANNING NOTES

Be sure there is adequate ceiling height to stand the refrigerator upright when it is moved into place. The dolly wheel height must be added to the tipping radius when a dolly is used.

Measurements in inches (mm)
Front Tipping Radius

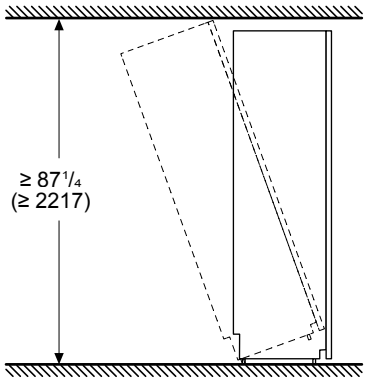

Measurements in inches (mm)
Side Tipping Radius

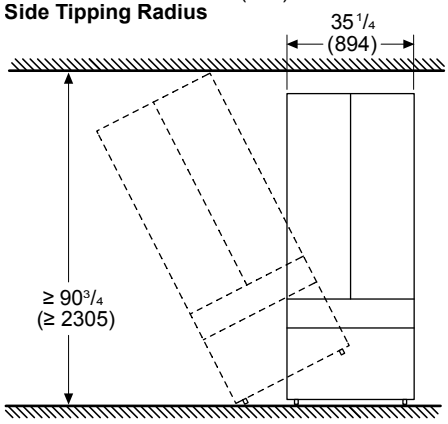

T36BT112NS
36-INCH BUILT-IN FRENCH DOOR BOTTOM FREEZER REFRIGERATOR, 2 DRAWER, PRE-ASSEMBLED
FREEDOM® COLLECTION, MASTERPIECE® COLLECTION HANDLES

BASE DETAIL DIMENSIONS, SIDE VIEW

Measurements in inches (mm)

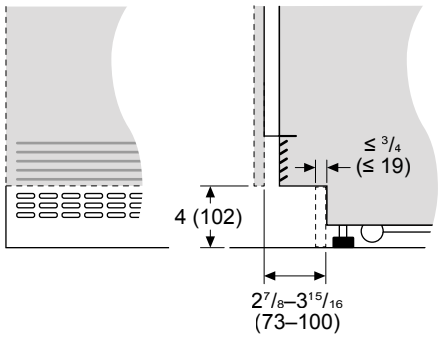

SIDE BY SIDE APPLIANCE INSTALLATION

PLANNING NOTES

A next-generation bottom freezer refrigerator and next-generation column appliance (ie. Wine Preservation Column) can be installed together, if a COMBIKIT10 is used to join the appliances. Ensure that the door panel thickness (including handles) as well as the swivel range are accounted for to prevent damage if the doors are opened at the same time.

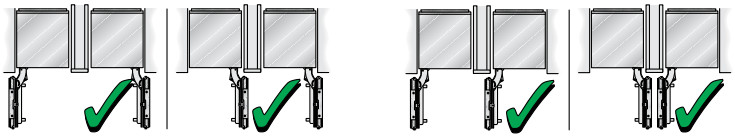

ACCESSORIES (OPTIONAL)



REPLFLTR55
(PART NO. 11032531)
UltraClarityPro® Water Filter



17006999
Ethylene Filter Starter Kit



17007000
Ethylene Filter Refill



11049963
Water Filter Bypass



COMBIKIT10
Required for side-by-side installation of built-in columns (model# Txxxx1) and built-in bottom freezer refrigerators (model# Txxxx1)

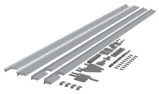

COMBIKIT20
Retrofit kit required for side-by-side installation of legacy built-in columns (model# Txxxx9) with built-in columns (model# Txxxx1) or built-in bottom freezer refrigerators (model# Txxxx1)

These warranties give you specific legal rights and you may have other rights that vary from state to state. Limited warranty from date of delivery. For complete warranty details, refer to your Use & Care manual, or ask your dealer.

Specifications are for planning purposes only. Refer to installation instructions and consult your countertop supplier prior to making counter opening. Consult with a heating and ventilation engineer for your specific ventilation requirements. For the most detailed information, refer to installation instructions accompanying product or write to Thermador indicating the model number. Specifications are correct at time of printing. Thermador reserves the right to change product specifications or design without notice. Some models are certified for use in Canada. Thermador is not responsible for products that are transported from the U.S. for use in Canada.

1 800 735 4328 | USA THERMADOR.COM | CANADA THERMADOR.CA | ©2026 BSH HOME APPLIANCES CORPORATION. ALL RIGHTS RESERVED.