SUMMIT CLASSIC COLLECTION

DOUBLE-TAP BEER COOLER Model SBC590

OUTDOOR VERSION Model SBC590OS

AjMadison
Your Appliance Authority™
800-570-3355

INSTRUCTION MANUAL

BEFORE USE, PLEASE READ AND FOLLOW ALL SAFETY RULES AND OPERATING INSTRUCTIONS.

Write Serial Number here:

_____

FELIX STORCH,INC.
Summit Appliance Division
7701 Garrison Avenue
Bronx, New York 10474
www.summitappliance.com

TABLE OF CONTENTS

Important Safeguards **2**

Before Using for the First Time ..... **3 – 4**

Unpacking the Beer Cooler 3

Electrical Requirements 3

Tips for Saving Energy 4

Installation ..... **5 – 7**

Parts List 5

Positioning Your Appliance 5

Adjusting the Tilt 6

Draft Arm Assembly 6

Beer Kegs and Keg Tappers ..... 6 - 7

CO_2 Regulator and CO_2 Cylinder 7

Tapping the Kegs 7

Installing the Beer Kegs into the Cabinet 7

A Note about Freestanding Installation 7

Operation ..... **8 – 9**

Temperature Control 8

Dispensing Beer 8

Understanding Beer Temperature 8

Beer Serving Tips 9

Beer Cooler Sounds 9

Care of Your Beer Cooler ..... **10 – 14**

Automatic Defrosting 10

Installing the Cleaning Kit 10

Cleaning the Beer Cooler ..... 10 – 11

Vacation 11

Moving the Beer Cooler ..... 11 – 12

Removing / Replacing the Base Grille 12

Reversing the Door Hinge 13

Disposing of a Worn-Out Appliance 14

Troubleshooting ..... **15 – 17**

Problems with the Beer Cooler 15

Problems with the Beer ..... 16 – 17

Limited Warranty **19**

AJMadison
Your Appliance Authority™
800-570-3355

IMPORTANT SAFEGUARDS

To reduce the risk of fire, electric shock or injury when using your appliance, follow these basic precautions:

1. Read all instructions before using the appliance.
2. Use two or more people to move and/or install the beer cooler.
3. The appliance must be correctly connected to the power supply. Plug into a grounded 3-prong outlet. Do not remove the ground prong.
4. Do not use an adapter.
5. Do not use an extension cord.
6. Immediately replace worn power cords, loose plugs and faulty power outlets.
7. Disconnect power before servicing.
8. Do not operate the appliance in the presence of explosive fumes. Keep flammable materials, such as gasoline, away from the refrigerator.
9. Use nonflammable products when cleaning the refrigerator.
10. Disconnect the appliance from the power supply before cleaning or repairing it. Only a qualified technician should repair it.
11. Never stand on top of or inside this appliance, or swing on the door.
12. To reduce likelihood of injury, do not let children play with this or any other appliance.
13. Do not operate the valve controls unless the cylinders are completely installed and connected.

DANGER! Old appliances can represent a suffocation hazard to children.

- Remove doors from your old appliance.
- Leave shelves in place so that children cannot easily climb inside.
- If old appliance contains refrigerants, it must be recycled by a licensed service or disposal company.

AiMadison
Your Appliance Authority™
800-370-3355

SAFETY PRECAUTIONS REGARDING CO_2 (CARBON DIOXIDE) GAS:

Always connect the CO_2 cylinder to a regulator! Failure to do so may cause an explosion resulting in possible injury or death when the cylinder valve is opened.

Never connect the CO_2 cylinder directly to the product container.

Always keep CO_2 cylinders away from heat. Store extra cylinders in a cool place (preferably below 70°F). Securely fasten cylinders with a chain in an upright position when storing.

Never drop or throw a CO_2 cylinder.

Always check the D.O.T. (Department of Transportation) test date on the cylinder neck before installation. If it has been more than 5 years, do not use. Return the cylinder to your gas supplier.

Never connect a product container unless there are at least two safety devices in the pressure system: one on the CO_2 regulator and the other on the product container or in the pressure gas line.

– SAVE THESE INSTRUCTIONS –

BEFORE USING FOR THE FIRST TIME

These instructions are important, and we request you read them before using this beer cooler. They describe the appliance and the correct and safe way to use it.

The instructions were prepared for various models so you may find descriptions of some accessories and functions that do not apply to yours. These units are designed for the cooling and dispensing of beer only, and are not recommended for storing perishable foods such as meats or dairy products.

Before connecting the appliance to the power supply, leave it standing for a least 8 hours. This allows the refrigerant to drain back into the compressor and reduces the risk of malfunctions in the cooling system caused by shipping.

Clean the appliance thoroughly, especially the interior. (See *Cleaning the Beer Cooler*, pages 10-11.) Proper grounding must be ensured to reduce the risk of shock and fire. Do not cut or remove the grounding plug! Connect to a 120V, 60Hz grounded AC outlet having a minimum 15 amps. Do not use an extension cord. Use a three-prong plug with a three-prong grounded wall outlet. If you do not have one, have a certified electrician install the proper outlet.

UNPACKING THE BEER COOLER

Remove tape, and clean off any residual glue from the appliance surfaces before turning the unit on. Apply some liquid dish detergent over the residue with your fingers, wipe down using warm water, then dry.

In order to prevent damage to the surface of your beer cooler, do not use rubbing alcohol, flammable fluids, abrasive cleaners or sharp tools when removing the packing tape and glue.

Discard or recycle all packaging material.

Clean the inside of your appliance prior to operation. Refer to the *Cleaning the Beer Cooler* section on pages 10-11.

Madison
Your Appliance Authority™
800-570-3355

ELECTRICAL REQUIREMENTS

Before moving your appliance into its desired location, it is important to check that the proper electrical connection will be used.

Recommended grounding method

A 115 Volt, 60 Hz., AC only, 15- or 20-amp fused, grounded electrical supply is required.

It is recommended that a separate circuit serving only your refrigerator be provided. Use an outlet that cannot be turned off by a switch.

Do not use an extension cord.

Use a three-prong plug with a three-prong grounded wall outlet. If you do not have one, have a certified electrician install the proper outlet.

NOTE: Be sure to unplug the beer cooler prior to installation, cleaning or general maintenance such as changing the light bulb.

WARNING:

- *Plug into a grounded 3 prong outlet.*
- *Do not remove ground prong.*
- *Do not use an adapter.*
- *Do not use an extension cord.*

Failure to follow these instructions can result in fire, electrical shock or death.

TIPS FOR SAVING ENERGY

- Try not to open the door too often, especially when the weather is hot and humid. Once you open the door, try to close it as soon as possible.
- If possible, disconnect the power before changing a keg of beer.
- **When the unit is built-in:** While this unit can be installed under a counter and the compressor cooling is fan-assisted, an air gap of 2” between the rear of the unit and the wall or counter surface behind is strongly recommended. This will enhance cooling and reduce energy waste. Also leave at least 3/16” on both sides and 1/16” at the top. Be sure that airflow under the appliance is not blocked.
- **When the appliance is used as a free-standing unit:** When placing your unit, make sure you allow at least 4” of clearance at the sides, rear and top to allow for adequate airflow.
- Set the thermostat from a higher to lower setting whenever possible, depending on how full the appliance is or what the ambient temperature is.
- Keep the unit out of direct sunlight.
- Periodically, check that the beer dispenser seals well and that the contents do not prevent the door from closing.

AjMadison
Your Appliance Authority™
800-570-3355

INSTALLATION

PARTS LIST

Remove all packing materials and parts. Inspect to make sure all parts listed below are present and in good condition:

1 double draft arm assembly (with washer)

1 CO_2 cylinder

1 CO_2 regulator

2 keg taps (American Sankey type)

1 cleaning kit

Vinyl tubing

1 stainless steel (removable) floor to protect the unit during keg insertion

1 drip tray

Hose clamps

Various screws

POSITIONING YOUR APPLIANCE

WARNING: *Two or more people are required to move and/or install this beer cooler. Failure to do so may cause back or other injury.*

NOTE: Beer coolers whose model numbers contain "OS" in their suffix can be used in outdoor settings. They have special insulation and a weather-resistant stainless steel body wrap. Also, a GFCI (Ground Fault Circuit Interrupter) is built into the line cord. In the event the cooler is not operating, first check to see that the GFCI has not tripped, then press the RESET button.

AJMadison
Your Appliance Outlet
800-570-3355

1. Choose a location for the appliance that has a strong, level floor. If such a place is unavailable, be sure to adjust the rotating leg supports such that the cooler is always kept level.
2. If it is to be built in, your appliance needs at least 1/16" of air space at the top, 3/16" on the sides, and 2" at the rear to allow for proper air ventilation. Be sure that airflow under the appliance is not blocked. If the appliance is installed next to a fixed wall, provide at least 2½" of room on the hinge side to allow for the door to swing open.
3. When the appliance is to be used free-standing, allow at least 4" of clearance at the top, back and sides to allow for proper air circulation.
4. Avoid direct sunlight and heat. Light can discolor the finish. In addition, when placed near a heat source such as stove or direct sunlight, the appliance will consume more electricity. Similarly, avoid installing in relatively cold locations: Do not install in a place where the temperature will fall below 55°F (13°C).
5. Avoid moisture. If placed near a sink or water faucet, the evaporator will frost faster because of the higher humidity.

WARNING: ***Explosion Hazard:*** *Keep flammable materials and vapors, such as gasoline, away from the beer cooler. Failure to do so can result in explosion, fire or even death.*

ADJUSTING THE TILT

If your beer cooler seems unsteady or you would like the door to close more easily, you can use the four leveling legs to adjust the tilt of the unit.

Be sure that the unit is in its final position when making adjustments to the tilt, and that it is plugged into a grounded 3-prong outlet.

WARNING:

⚠ *Two or more people are required to move and/or install the refrigerator. Failure to do so may cause back or other injury.*

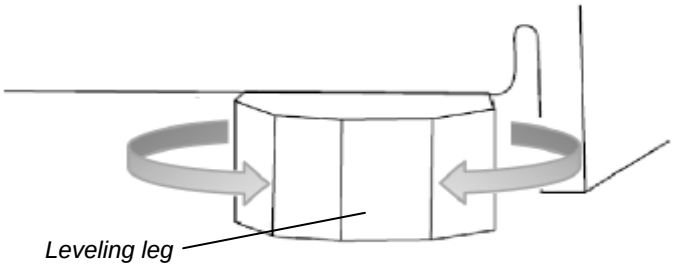

- Turning a leveling leg to the right will lower the appliance toward the position of the leg. Likewise, turning to the left will raise the unit away from the leg.
- Several turns of the leveling legs may be required before the tilt of the appliance is properly adjusted.
- Turning both front legs the same amount to the left will tilt the beer cooler to the rear. This adjustment makes it easier for the door to close.

  NOTE: It is easier to adjust the leveling legs if someone else pushes against the top of the appliance to take the weight off the legs.

AJMadison
Your Appliance Authority™
800-570-3355

DRAFT ARM ASSEMBLY

1. Slide the gasket over the wing nut on the bottom of draft arm assembly beer tubes. Slide gasket up beer tubes to draft arm base.
2. Push the wing nut on the beer tube of the draft arm assembly through the hole in the top of the cabinet until the draft arm is resting on cabinet top.
3. Align holes in draft arm base with holes in gasket and pilot holes in cabinet, then secure the guard rail to the cabinet top.

BEER KEGS and KEG TAPPERS

The SBC590 beer cooler comes with a double tap and will accommodate two “Sixth Barrel” kegs, also known as “sixtels” or “logs”. Each sixtel has a height of 23-3/8” and a diameter of 9-1/4”, and hold 5.16 gallons of beer. Two Cornelius (“Corny”) kegs will also fit. The SBC590 will not hold a half barrel or quarter barrel, although it can take one “Slim Quarter” barrel.

The Sankey type keg tappers supplied with the beer cooler are the most widely used in the United States. However, other types of keg tappers can be used. Before installing a keg tapper, check with your beer distributor to make sure that the Sankey type keg tapper can be used.

If you need keg tappers other than the Sankey type, it is recommended that you purchase the tappers you need from your beer distributor. Please keep the Sankey type keg tappers for future use. The Sankey system is becoming more popular. It may be purchased from our Sales Department at **718-893-3900**.

CO_2 REGULATOR and CO_2 CYLINDER

NOTE: Your CO_2 cylinder is shipped empty to avoid any possible accidents during transportation. When you purchase the first keg of beer, have your beer distributor fill the CO_2 cylinder. You must read and understand the following procedures for CO_2 cylinders before installation:

1. Install the CO_2 gas line tube to the regulator by attaching one end of the red tube to the hose connection on the CO_2 regulator.
2. Secure the tube by using one of the self-locking black plastic snap-on clamps.
3. Insert a special washer into the regulator-to-cylinder attachment nut.
4. Attach the CO_2 regulator to the CO_2 cylinder by screwing the regulator nut onto the cylinder valve and tightening with an adjustable wrench.
5. Remove the bolt with the nut from the cylinder retainer. Using two screws, attach it inside the unit on the left side of the back wall. Holes are pre-drilled and screws are included.
6. Slide the cylinder through the retainer and secure it with the bolt and the nut. Position the cylinder this way so that you will be able to read the numbers on the gauges and easily access the shut-off valve.

TAPPING THE KEGS

1. Make sure the shutoff valve on the CO_2 regulator is in a closed position. Connect the pressure tubes to the nipples of the keg tappers (use hose clamps). Connect the beer tubes from the draft arm to the keg tappers. (Fasten securely with washer and wing nut.)
2. Make sure the beer faucets and keg tappers are in a closed position, and then tap the kegs. Open the keg tapper valves.
3. Make sure the kegs are properly tapped, then open the shutoff valve on the CO_2 regulator.

INSTALLING THE BEER KEGS INTO THE CABINET

1. Lean one keg on the front bottom edge of the cabinet.
2. Move the keg to an upright position, then slide it into the cabinet. (Use the stainless steel floor to avoid damaging the unit).
3. Make sure the keg and beer tube do not touch the cold plate.
4. Repeat with the second keg.
5. The kegs and keg supports should be properly positioned in order for the door to remain closed.
6. Release the air caught in the draft arm assembly by opening the beer faucet until foam appears.

A NOTE ABOUT FREESTANDING INSTALLATION

If you decide to install your beer cooler in a freestanding position (rather than built-in) you will need to order the **SBC590 Kit**, which includes a guard rail and a set of casters. Call our Customer Help Line at **1-800-287-8799** weekdays between 8:30am and 5:00pm ET.

AiMadison
your appliance accessories
800-570-3355

OPERATION

TEMPERATURE CONTROL

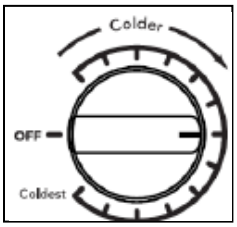

The beer cooler's temperature control knob is preset at the factory for your convenience. When first installing the cooler, be sure that the control is still in the mid-point setting as shown.

Adjusting the Control Knob

The mid-setting indicated in the paragraph above should be ideal for regular use.

However, if you need to adjust the temperature, be sure to wait at least 24 hours between adjustments. Check the temperature, and adjust the knob to the next higher setting to make the refrigerator colder. To make the refrigerator less cold, adjust the control to the next lower setting.

DISPENSING BEER

Follow these steps to dispense beer:

1. Make sure the beer dispenser is plugged in properly to a 120V, 60Hz, 15 amp grounded AC outlet.
2. Place the drip tray under the beer faucets.
3. Open the beer faucet by pulling the tap towards you quickly and completely to dispense the beer.
4. Increase the pressure if the beer runs too slowly. At the correct pressure and temperature, a 10-oz glass should be filled in 4 seconds.
5. Hold the glass steady at a 45° angle. When it is 2/3 full, start straightening the glass. Proper foam should be a tight, creamy head and the collar on an average glass should be 3/4" to 1" high.

NOTE: It is normal to see condensation forming on a faucet. It is caused by the difference in temperature between the cold beer and the inner surfaces of the faucet when beer is flowing through the line.

AJMadison
Your Appliance Authority™
800-570-3355

UNDERSTANDING BEER TEMPERATURE

The recommended temperature for serving chilled beer is between 38° and 43°F. To maintain this temperature in average room conditions of 70°F, set the thermostat dial at its midpoint.

NOTES: During the summertime when temperatures are warmer, we recommend that you adjust the control to a cooler setting. Selecting and maintaining the proper temperature inside the cabinet is necessary for maintaining the flavor and freshness of beer. Excessively cold or warm temperatures inside the cabinet may cause a loss of flavor.

The best temperature for storing a keg is approximately 38°F.

Sour beer is produced as a result of secondary fermentation above 45°F.

BEER SERVING TIPS

The following tips will help you serve the perfect beer. To serve beer from the tap similar to the way it left the vat, check the following:

- Cleanliness (see *Care of Your Beer Cooler*, pages 10-11)
- Temperature (see *Temperature Control*, page 8, and *Understanding Beer Temperature*, page 9)
- Pressure (see *Troubleshooting*, page 16)
- Use only CO_2 gas

BEER COOLER SOUNDS

After your new beer cooler has run for a while, you may notice some sounds being generated by the unit. These are normal. Any hard surfaces surrounding the unit, such as the floor or cabinetry, can make the sounds seem louder. The following list explains some of the sounds you may hear and their causes.

- Your beer cooler uses a high-efficiency compressor and fans to keep beer at the desired temperature while minimizing energy usage. The fan and compressor may therefore run for longer periods than your old refrigerator. You may also notice a pulsating or high-pitched sound coming from the compressor or fans, as they adjust to optimize performance.
- As refrigerant flows inside the cabinet, you may hear some rattling noises. This may also be caused by items stored inside the cabinet.
- After each cooling cycle, you might hear a gurgling sound caused by the refrigerant flowing in your beer cooler.
- When the cooler is defrosting, you might hear water running into the drain pan.
- Each time the cooler starts or stops running, you may hear some clicking sounds.
- Outdoor beer dispensers contain a rear fan which runs only when the compressor is on, and some models have an internal air circulation fan which runs continuously. A quiet fan hum (similar to that of a computer fan) is normal.

Madison
Your Appliance Authority
800-570-3355

CARE OF YOUR BEER COOLER

AUTOMATIC DEFROSTING

There is usually no need to defrost the beer cooler because the ice deposited on the inner back wall is automatically defrosted. Ice deposits on the inner back wall during compressor operation. Later on, when the compressor is not operating, the ice defrosts and water drains through the outlet in the inner back wall into the drain pan situated above the compressor where it evaporates. If you see water building up in the rear of the unit, check that the drain trough is not clogged. Use a pipe cleaner or a piece of flexible wire. During extremely hot and humid weather, some ice may build up. If necessary, remove contents of the beer cooler, turn the thermostat to **Off** and allow defrosting. A hair dryer may facilitate the process.

INSTALLING THE CLEANING KIT

Read and understand the following instructions before installing the cleaning kit.

1. Mix one gallon of warm water and one ounce (one tablespoon) of cleaner in a bucket.
   NOTE: Do not use lye, soap or hot water.
2. Remove the cleaner cap. Fill the jar and replace the cap. Leave the remaining solution in the bucket.
3. Turn off either the air cock on the regulator or the valve on the CO_2 tank.
4. Disconnect the tap that is to be cleaned from the keg. Then disconnect the beer line from the tap by turning the nut counter-clockwise. Place the tap and end of the hose in the bucket.
5. Remove the faucet from the tower with the wrench and attach the fitting on the cleaning bottle in its place.
   NOTE: Make sure there is a washer at the back of the fitting.
6. Hold the cleaning jar upside down until the solution runs through the system into the bucket.
7. Fill the jar with cold clean water and repeat the process until the water runs clean.
8. Rinse the tap in the bucket with cold water.
9. Remove the fitting from the tower and reinstall the faucet. Make sure the washer is at the back of the faucet.
10. Re-attach the beer hose to the tap and attach the tap to the barrel.
11. Repeat the process when the second keg is empty.
    NOTE: Beer lines should be flushed after each keg is emptied.

AJMadison
Your Appliance Authority™
800-570-3355

CLEANING THE BEER COOLER

NOTE: To prevent the buildup of odors, clean the beer cooler about once a month. Follow the procedure below for cleaning:

1. Disconnect from power.
2. Remove any parts that can be taken out of the cabinet.
3. Using a clean sponge or soft cloth, hand wash, rinse and dry removable parts and interior surfaces thoroughly. Use a mild detergent in warm water. DO NOT use abrasive or harsh cleansers such as window sprays, scouring cleansers, flammable fluids, cleaning waxes, concentrated detergents, bleaches or cleansers containing petroleum products. DO NOT

use harsh cleaning tools such as paper towels or scouring pads, as these can scratch or damage the surfaces of the refrigerator.

4. For stainless steel and painted metal exterior surfaces, use a clean sponge or soft cloth and a mild detergent in warm water. DO NOT use abrasive or harsh cleaners, or cleaners containing chlorine, as these can scratch or damage the material. Using a soft cloth, dry thoroughly.
5. To help with removing odors, you can use a mixture of warm water and baking soda (2 tbs to 1 qt [26 g to 0.95 L] of water) to wash the interior walls.
6. After cleaning, replace all of the parts that were removed from the beer cooler.
7. The condenser coils, located behind the base grille, should also be cleaned regularly. This may be as often as every other month. Cleaning the condenser coils can help reduce how much energy the cooler uses.
   - Remove the base grille (see *Removing / Replacing the Base Grill* on page 12).
   - When the condenser coils are dusty or dirty, use a vacuum cleaner with an extension attachment.
   - Replace the base grille.
8. After cleaning the beer cooler, plug in or reconnect power.

VACATION

If the appliance will be turned off prior to your departure, follow these steps.

1. Remove contents from the appliance.
2. Unplug the appliance.
3. Clean the appliance. See *Cleaning the Beer Cooler* on pages 10 - 11.
4. Prop the door open so that sufficient air can enter the beer cooler. Do so by taping a rubber or wooden block to the top of the door. Allowing air to flow into the appliance prevents the buildup of odor and mold.

AJ Madison
Your Appliance Authority
800-570-3355

MOVING THE BEER COOLER

Follow the instructions below to prepare your appliance when moving to a new location, such as a new home.

1. Remove all contents from the beer cooler.
2. Unplug the cooler.
3. Clean, wipe, and dry the unit completely.
4. Take out all removable parts, wrap them, and tape them together securely so they don't shift and rattle during the move.
5. Tape the door shut and tape the power cord to the rear of the cooler.

WARNING:

⚠ *Two or more people are required to move and/or install the appliance. Failure to do so may cause back or other injury.*

Important information about moving your beer cooler

Your beer cooler is heavy. When moving the unit for cleaning or maintenance, cover the floor with cardboard or hardboard to prevent damaging your floor. You should always pull the unit straight out when moving it. Do not wiggle or "walk" the cooler when trying to move it, as this can cause floor damage.

REMOVING / REPLACING THE BASE GRILLE

Required Tools: Phillips screwdriver

To remove the base grille:

1. Open the beer cooler door.
2. Remove the two SCREWS with a Phillips screwdriver. Release and remove the base grille from the cooler by pushing both TABS in toward the center.

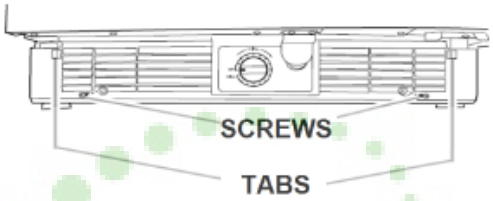

To replace the base grille:

1. Open the cooler door.
2. Align both TABS into position, such that the base grille snaps into place.
3. Replace and tighten the two SCREWS.

AJMadison
Your Appliance Authority™
800-570-3355

REVERSING THE DOOR HINGE (Optional)

Required tools: Phillips screwdriver

1. Disconnect power from the unit.
2. Remove each of the screws on the top of the unit. There should be a total of **seven** (3 on the hinge side, 4 on the unhinged side). **Be careful not to lose or discard the screws.**
3. Remove the TOP HINGE and WASHER (see picture at bottom) and set aside.
4. Lift the door straight up and off of the BOTTOM HINGE.
5. Remove the screws fastening the BOTTOM HINGE and COVER to the bottom of the beer cooler cabinet. There are **five** screws total (4 for the hinge, 1 for the cover).
6. Move the BOTTOM HINGE and COVER each to the opposite side of the bottom of the cabinet. Completely tighten the four BOTTOM HINGE screws, and tighten the COVER screw gently.

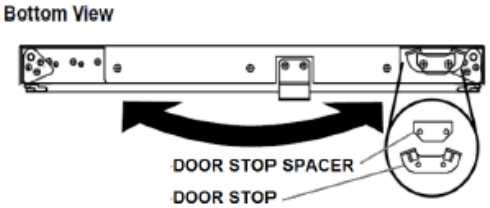

7. Remove the two screws fastening the DOOR STOP SPACER and the DOOR STOP to the bottom of the beer cooler door, and move the spacer and stop to the opposite side.
8. Re-insert and completely tighten the screws.
9. Install the door onto the washer and hinge pin of the BOTTOM HINGE.
10. Align the top hinge WASHER with the HINGE HOLE in the top of the door. Then, insert the TOP HINGE pin through the WASHER and into the HINGE HOLE.
11. Fasten the TOP HINGE with three screws and move the remaining four screws to the opposite side. Completely tighten the **seven** screws.

AJMadison
Your Appliance Authority™
800-570-3355

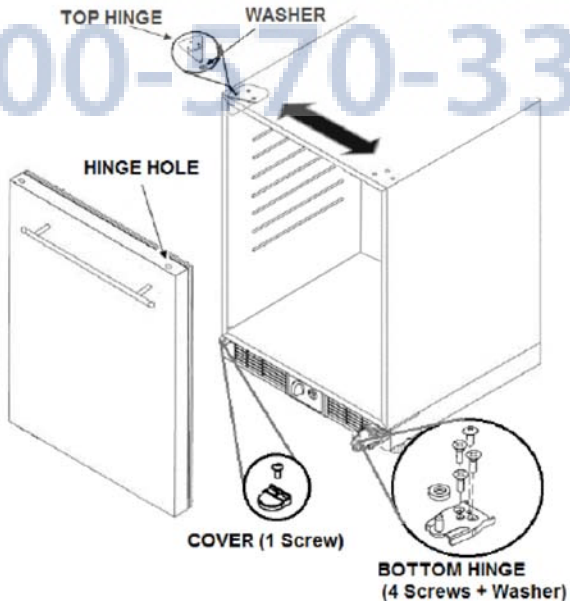

DISPOSING OF A WORN-OUT APPLIANCE

- When an appliance finally wears out, dispose of it.
- Before you dispose of your old appliance, take the door or doors off but leave the shelves and drawers in place so that children cannot easily climb inside.
- The refrigerating system of the appliance is filled with refrigerant and insulating substances which should be separately recycled. Either have a licensed appliance repair company or dealer remove the appliance or call your local recycling office for the appropriate disposal information.
- For the sake of environmental protection, be careful not to damage the rear wall of the appliance (the condenser unit or the tubes when moving the appliance) or any part of the refrigeration system inside the appliance.
- This beer cooler is 100% CFC-free, but the coolant is under pressure and puncturing the sealed system could be dangerous. The coolant used in the sealed system is non-toxic.
- Many older appliances may contain refrigerants that are harmful to the environment, and should be recycled by a lawfully licensed company.

AjMadison
Your Appliance Authority™
800-570-3355

TROUBLESHOOTING

Many problems can be resolved without the need for a service call. Try the following list as a reference to potential solutions of common problems.

PROBLEMS WITH THE BEER COOLER

PROBLEM: The beer cooler is not operating.

- Is the power supply cord unplugged? Plug into a grounded 3-prong outlet.
- Has a household fuse blown or a circuit breaker been tripped? Replace the fuse or reset the circuit.
- Is the temperature control knob in the OFF position or incorrectly set? See *Temperature Control* section on page 8.

PROBLEM: The motor is constantly running, or running too much

- Is it hotter than usual where the beer cooler is? At normal temperatures, the motor will typically run between 40% and 80% of the time. The motor will run even longer when the unit is in an unusually warm environment.
- Has a large amount of product been added to the beer cooler? The more that is added, the longer it will take for the unit to cool down. During this process, the motor will run longer.
- Is the door frequently opened? Warm air entering the beer cooler causes the motor to run longer. Keep the door closed as much as possible.
- Is the control set correctly? See *Temperature Control* on page 8.
- Is the door completely closed? Push the door firmly shut.
- Are the condenser coils dirty? This prevents proper air transfer, and causes the motor to work harder. Clean the condenser coils. See *Cleaning the Beer Cooler* section on pages 10 - 11, and refer to #7.

PROBLEM: The beer cooler temperature is too warm

- Have you just added a large amount of product to the refrigerator? This will warm the interior of the unit until the unit is able to cool down to the correct temperature.
- Is the control set correctly? See *Temperature Control* on page 8.

PROBLEM: There is excessive moisture inside the beer cooler

- Is the door opened frequently? If so, humidity from the room will enter the beer cooler and cause moisture to build up. This will happen even more if the air in the room is very humid.

PROBLEM: The door is hard to open

- Is the gasket dirty or sticky? Clean the gasket and the surfaces that it touches. Rub a thin coat of paraffin wax on the gasket after cleaning.

AJMadison
Your Appliance Authority
800-570-3355

PROBLEMS WITH THE BEER

Problem	Cause	Correction
Beer is cloudy: The beer in the glass appears hazy and not clear.	Excessively low temperatures may cause hazy or cloudy beer, particularly when the beer lies in the cold coil for long periods of time.	Drain a few ounces before drinking.
		Raise the temperature setting of the unit.
	Glasses may not have been cleaned properly.	Do not wash beer glasses together with glasses that have contained milk or any other fatty substance. An excessive amount of germicide build-up may also leave a fatty film, which will cause beer to go flat.
		It is preferable to steam and sterilize glasses if such facilities are available.
		Wash glasses thoroughly with a good detergent to remove all fatty substances (i.e., lipstick)
		Do not use soap.
		Do not wipe the glasses dry. Permit glasses to air-dry by placing them on a wire rack or on a corrugated metal sheet.
		Rinse the glasses in fresh cold water just before serving beer. It is best to serve beer in a wet glass.
	Improper drawing of beer into glass	Open the faucet quickly and completely; proper foam should be a tight creamy head. The collar on the average glass should be ¾" to 1" high. Beer drawn without a head has the appearance of being flat.
	Not enough pressure	Increase the pressure if beer runs too slowly. The correct flow should fill a 10-oz glass in 4 seconds (approx. 8 oz of liquid). Check the pressure source to determine whether there are obstructions in the air line. Replace a sluggish air source or the CO_2 regulator and gauge. The tank pressure must always be higher than the pressure used on the keg. Always apply pressure to the keg before drawing beer.

AjMadison
Your Appliance Authority
800-570-3355

Beer has off taste: Often bitter and bite-y; sometimes completely lacking flavor and zest. It may also have an oily or foul odor which may carry an unpleasant taste.	Improper cleaning of the tap	Brush and clean the tap properly. It should be scoured using a detergent, then rinsed clean.
	Contaminated air line	Beer tube should be examined. If contaminated, it should be replaced.
Condensation is forming on faucet.	It is normal to see conden-sation forming on the faucet. It is caused by a difference in temperature between the cold beer and the surfaces of the faucet when beer is flowing through the line. Beer that is left in the faucet is not cooled by the beer dispenser.	After a period of non-use, a few ounces should be drained before drinking.

Madison
Your Appliance Authority™
800-570-3355

NOTES

AjMadison
Your Appliance Authority™
800-570-3355

LIMITED WARRANTY

ONE-YEAR LIMITED WARRANTY

Within the 48 contiguous United States, for one year from the date of purchase, when this appliance is operated and maintained according to instructions attached to or furnished with the product, warrantor will pay for factory-specified parts and repair labor to correct defects in materials or workmanship. Service must be provided by a designated service company. Outside the 48 states, all parts are warranted for one year from manufacturing defects. Plastic parts, shelves and cabinets are warranted to be manufactured to commercially acceptable standards, and are not covered from damage during handling or breakage.

5-YEAR COMPRESSOR WARRANTY

The compressor is covered for 5 years.
Replacement does not include labor.

ITEMS WARRANTOR WILL NOT PAY FOR:

1. Service calls to correct the installation of your appliance, to instruct you how to use your appliance, to replace or repair fuses or to correct wiring or plumbing.
2. Service calls to repair or replace appliance light bulbs or broken shelves. Consumable parts (such as filters) are excluded from warranty coverage.
3. Damage resulting from accident, alteration, misuse, abuse, fire, flood, acts of God, improper installation, installation not in accordance with electrical or plumbing codes, or use of products not approved by warrantor.
4. Replacement parts or repair labor costs for units operated outside the United States.
5. Repairs to parts or systems resulting from unauthorized modifications made to the appliance.
6. Expenses for travel and transportation for product service in remote locations.
7. The removal and reinstallation of your appliance if it is installed in an inaccessible location or is not installed in accordance with published installation instructions.

DISCLAIMER OF IMPLIED WARRANTIES – LIMITATION OF REMEDIES

CUSTOMER'S SOLE AND EXCLUSIVE REMEDY UNDER THIS LIMITED WARRANTY SHALL BE PRODUCT REPAIR AS PROVIDED HEREIN. IMPLIED WARRANTIES, INCLUDING WARRANTIES OF MERCHANTABILITY OR FITNESS FOR A PARTICULAR PURPOSE, ARE LIMITED TO ONE YEAR. WARRANTOR SHALL NOT BE LIABLE FOR INCIDENTAL OR CONSEQUENTIAL DAMAGES. SOME STATES DO NOT ALLOW THE EXCLUSION OR LIMITATION OF INCIDENTAL OR CONSEQUENTIAL DAMAGES, OR LIMITATIONS ON THE DURATION OF IMPLIED WARRANTIES OF MERCHANTABILITY OR FITNESS, SO THESE EXCLUSIONS OR LIMITATIONS MAY NOT APPLY TO YOU. THIS WARRANTY GIVES YOU SPECIFIC LEGAL RIGHTS AND YOU MAY ALSO HAVE OTHER RIGHTS, WHICH VARY FROM STATE TO STATE.

WARNING! This product may contain chemicals known to the state of California to cause cancer or birth defects or other reproductive harm. For more information, visit: www.summitappliance.com/prop65

Chemicals known by the manufacturer to be present in this product in concentrations higher than threshold limits: NONE

FELIX STORCH, INC.
770 Garrison Avenue
Bronx, NY 10474
Phone: (718) 893-3900
Fax: (844) 478-8799
www.summitappliance.com

SUMMIT CLASSIC COLLECTION

For parts and accessory ordering, troubleshooting and helpful hints, visit:

www.summitappliance.com/support

Printed in the USA