PRODUCT SHEET

MODEL	**SUT968**
PICTURE	
LINE DRAWING	
	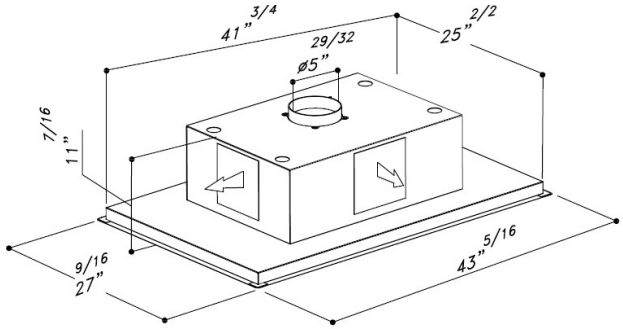
DIMENSIONS	28”x44”
MOTOR	MOTOR ON BOARD ALUMINIUM DIE-CAST HOUSING **Airflow: 600 CFM** **Pressure: 680 Pa** **Noise Level: 64 dB(A)**
LIGHTING	LED BAR 2x 5W 4200°K
CONTROL PANEL	REMOTE CONTROL 4 speeds + timer + light
GREASE FILTER	ANODIZED ALUMINIUM (5+1 LAYERS)
MATERIAL	STAINLESS STEEL AISI430
AIR OUTLET	6” ROUND in 30” ver.
DISCHARGE	VERTICAL and HORIZONTAL
ACCESSORIES	CHARCOAL FILTERS KF30 US