KITCHEN
SYSTEMS

FRANKE

AJMadison
Your Appliance Authority™
800-570-3355

Planar 8 Sink Series

www.frankeksd.com

Stay Connected with
Franke Online:

frankeluxuryusa

HAND-FABRICATED, ITALIAN-MADE KITCHEN SINKS

New Product Introduction: Planar 8 Kitchen Sink

Designed and hand-fabricated in Italy, the Planar 8 Kitchen Sink Series is made of smooth, Grade 304 (18 percent chromium, 10 percent nickel), 18-gauge stainless steel, with sound-dampening pads and Franke's silky luster finish. Other key features include

- **Maximized work space:** These undermount sinks measure 17 inches from front to back to enhance countertop work space without compromising sink functionality.
- **Maximized storage space:** The drain is placed in the rear of the unit so that drainage piping does not crowd the space inside the cabinet beneath the sink.
- **Easier cleaning:** Keeping a Planar 8 sink bright and clean is easy given the thoughtful design. Unlike the zero-degree radius corners of other hand-fabricated kitchen sinks, the new Planar 8 is handcrafted with a tight, 8mm radius. That minimally curved corner makes this new product much easier to maintain.
- **Enhanced functionality:** Custom accessories, such as a bottom grid, a cutting board, and a colander are available to create a more productive and enjoyable cooking experience.

AJMadison
Your Appliance Authority
800 570 3355

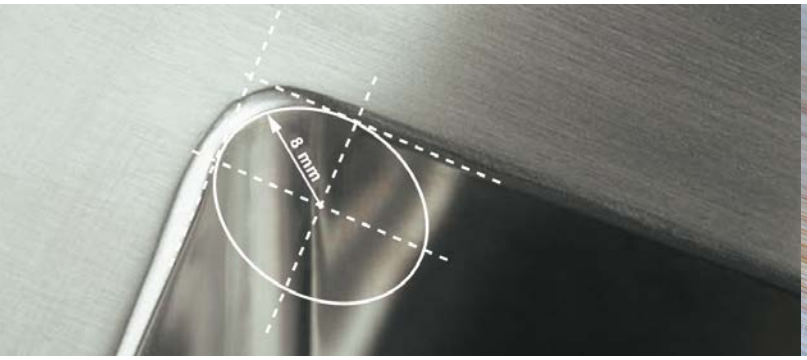

PEX110-14

Interior Dimensions: 14” x 17” x 9½”
Exterior Dimensions: 15½” x 18½”
Minimum Cabinet Size: 18”

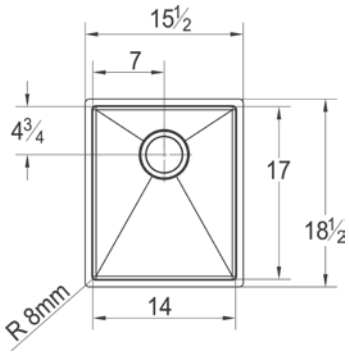

Custom Accessories

Bottom Grid

PE-14S

Colander

PE-70S

Cutting Board

PE-40S

Suggested Kitchen System

Faucet

FFP1100

Waste Disposer

FWD75R

Little Butler

LB9200

Filtration

FRCNSTR100

Heating Tank

HT-200

Soap Dispenser

SD500

PEX110-21

Interior Dimensions: 21” x 17” x 9½”
Exterior Dimensions: 22½” x 18½”
Minimum Cabinet Size: 27”

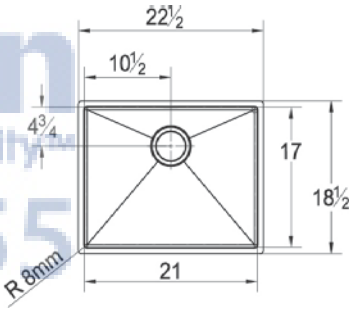

AjMadison
Your Appliance Authority
800-570-3355

Custom Accessories

Bottom Grid

PE-21S

Colander

PE-70S

Cutting Board

PE-40S

Suggested Kitchen System

Faucet

FF2700

Waste Disposer

FWD75R

Little Butler

LB7100

Filtration

FRCNSTR100

Heating Tank

HT-200

Soap Dispenser

SD2500

PEX110-28

Interior Dimensions: 28” x 17” x 9½”
Exterior Dimensions: 29½” x 18½”
Minimum Cabinet Size: 33”

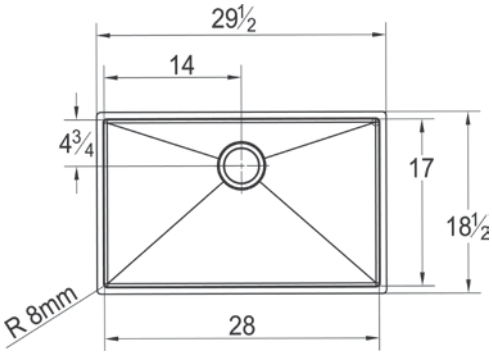

Custom Accessories

Bottom Grid

PE-28S

Colander

PE-70S

Cutting Board

PE-40S

Suggested Kitchen System

Faucet

FF2400R

Waste Disposer

FWD100R

Little Butler

LB5200

Filtration

FRCNSTR100

Heating Tank

HT-200

Soap Dispenser

SD2400

PEX110-31

Interior Dimensions: 31” x 17” x 9½”
Exterior Dimensions: 32½” x 18½”
Minimum Cabinet Size: 36”

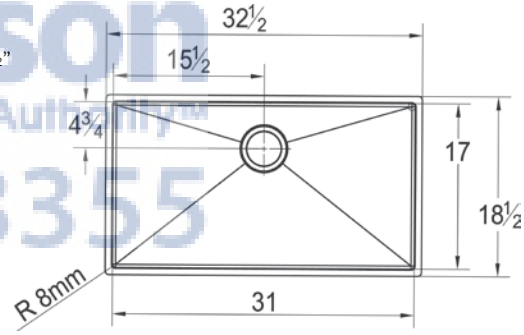

AJMadison
Your Appliance Authority™
800-570-3355

Custom Accessories

Bottom Grid

PE-31S

Colander

PE-70S

Cutting Board

PE-40S

Suggested Kitchen System

Faucet

FF2100

Waste Disposer

FWD100R

Little Butler

LB7200

Filtration

FRCNSTR100

Heating Tank

HT-200

Soap Dispenser

SD2500

Franke Kitchen Systems
800 Aviation Parkway
Smyrna, TN 37167
800-626-5771

www.frankeksd.com