MARVEL

OWNER'S GUIDE & SERVICE MANUAL

MARVEL UNDERCOUNTER REFRIGERATION

Model: MPCP415-IS81A

WELCOME

Welcome to the Marvel Experience!

Congratulations of your purchase of the industry's quietest clear ice machine with the best ice clarity and purity. Your new investment is protected by a limited warranty for the first year, and hermetically sealed refrigeration system parts are covered for an additional 4 years.

Here's your guide to the operation and maintenance of your Marvel Clear Ice Machine to ensure years of enjoyment. If you have any questions, please contact Marvel Customer Service or Tech Support at:
Phone: (616) 754-5601
Email:

- Customer Service: orderdesk@marvelrefrigeration.com
- Tech Support: techsupport@marvelrefrigeration.com

Got a Marvelous Design?

We would love to see how your Marvel product looks in its new home. You can send us photos of your installed product at marketing@marvelrefrigeration.com, and we might feature your Marvel home design on our website and social media!

Bonus Third-Year Warranty Free with Product Registration

Your Marvel Professional product qualifies for a one-year extension of the two-year warranty coverage from your date of purchase, free of charge. To take advantage of this third-year warranty, be sure to register your product with Marvel within 60 days from the date of purchase at marvelrefrigeration.com and provide proof of purchase.

Thank you again for investing in Marvel for your home!

Warranty Registration

It is important you register your product warranty after taking delivery of your appliance. You can register online at www.marvelrefrigeration.com.

The following information will be required when registering your appliance:
Serial Number
Date of Purchase
Dealer's Name and Address

Online registration available at marvelrefrigeration.com

The serial number can be found on the serial plate which is located inside the cabinet on the left side near the top.

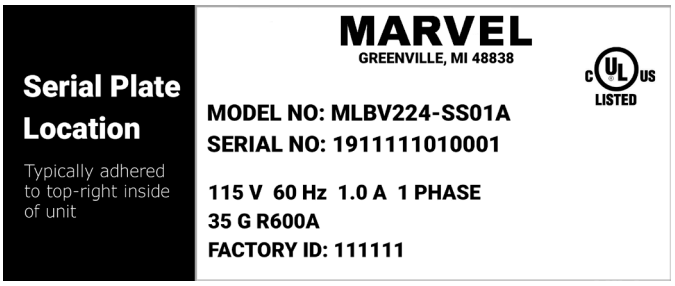

TABLE OF CONTENTS

Tip: Click on any section below to jump directly there

Safety

- Important Safety Instructions

Installation

- Unpacking Your Appliance
- Electrical
- Cutout & Product Dimensions
- Installing Your Appliance
- Side-by-Side & Stacking Installations
- Door Reversal
- Integrated Panel Dimensions
- Integrated Panel Installation
- Installing The Water Supply
- Installing the Drain plumbing

Maintenance

- Care and Cleaning
- Long-Term Storage/Winterization

Operating Instructions

- Using Your Electronic Control
- Ice Maker Operation

Service

- Obtaining Service
- Troubleshooting
- Wire Diagram
- Product Liability
- Parts List
- Ordering Replacement Parts
- R600a Specifications

System Diagnosis Guide

Compressor Specifications

Control Operation - Service

Thermistor

Warranty

Important Safety Instructions

Warnings and safety instructions appearing in this guide are not meant to cover all possible conditions and situations that may occur. Common sense, caution and care must be exercised when installing, maintaining or operating this appliance.

Recognize Safety Symbols, Words and Labels

WARNING

WARNING - You can be killed or seriously injured if you do not follow these instructions.

CAUTION

CAUTION - Hazards or unsafe practices which could result in personal injury or property/product damage.

NOTE

NOTE - Important information to help assure a problem-free installation and operation.

WARNING

State of California Proposition 65 Warning:
This product contains one or more chemicals known to the State of California to cause birth defects or other reproductive harm.

WARNING

State of California Proposition 65 Warning:
This product contains one or more chemicals known to the State of California to cause cancer.

WARNING

WARNING - This unit contains R600a (isobutane) which is a flammable hydrocarbon. It is safe for regular use. Do not use sharp objects to expedite defrosting. Do not damage refrigerant circuit.

WARNING

EXCESSIVE WEIGHT HAZARD
Use two or more people to move product.
Failure to do so can result in personal injury.

Remove Interior Packaging

Your appliance has been packed for shipment with all parts that could be damaged by movement securely fastened. Remove internal packing materials and any tape holding internal components in place. The getting started guide is shipped inside the product in a plastic bag along with the warranty registration card and other accessory items.

Important

Keep your carton and packaging until your appliance has been thoroughly inspected and found to be in good condition. If there is any damage, the packaging will be needed as proof of damage in transit. Afterwards, please dispose of all items responsibly.

WARNING

WARNING - Dispose of the plastic bags which can be a suffocation hazard.

Note to Customer

This merchandise was carefully packed and thoroughly inspected before leaving out facility. Responsibility for its safe delivery was assumed by the retailer upon acceptance of the shipment. Claims for loss or damage sustained in transit must be made to the retailer.

NOTE

DO NOT RETURN DAMAGED MERCHANDISE TO THE MANUFACTURER - FILE THE CLAIM WITH THE RETAILER.

CAUTION

If the appliance was shipped, handled or stored in other than an upright position for any period of time, allow the appliance to sit upright for a period of at least 24 hours before plugging in. This will assure oil returns to the compressor. Plugging the appliance in immediately may cause damage to internal parts.

WARNING

WARNING - Help Prevent Tragedies

Child entrapment and suffocation are not problems of the past. Junked or abandoned refrigerators are still dangerous, even if they sit outside for “just a few hours”.

If you are getting rid of your old refrigerator, please follow the instructions below to help prevent accidents.

Before you throw away your old refrigerator or freezer:

- Take off the doors or remove the drawers.
- Leave the shelves in place so children may not easily climb inside.

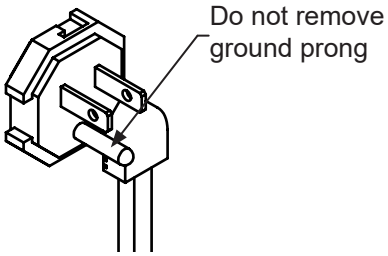

Electrical Connection

A grounded 115 volt, 15 amp dedicated circuit is required.

This product is factory equipped with a power supply cord that has a three-pronged, grounded plug. It must be plugged into a mating grounding type receptacle in accordance with the National Electrical Code and applicable local codes and ordinances. If the circuit does not have a grounding type receptacle, it is the responsibility and obligation of the customer to provide the proper power supply. The third-ground prong should not, under any circumstances, be cut or removed.

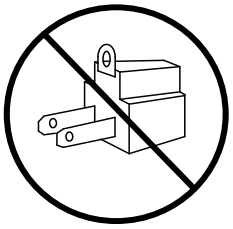

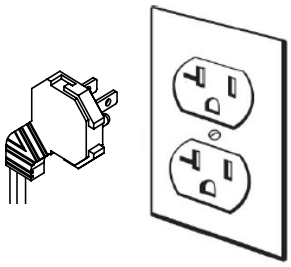

NOTE

Ground Fault Circuit Interrupters (GFCI) are prone to nuisance tripping which will cause the appliance to shut down. GFCI's are generally not used on circuits with power equipment that must run unattended for long periods of time, unles required to meet local building codes and ordinances.

⚠ WARNING

Electrical Shock Hazard

- Do not use an extension cord with this appliance. They can be hazardous and can degrade product performance.
- This appliance should not, under any
- circumstances, be installed to an un-grounded
- electrical supply. Do not remove the grounding prong from the power cord.
- Do not use an adapter.
- Do not splash or spray water from a hose on the appliance. Doing so may cause an electrical shock, which may result in severe injury or death.

CUTOUT & PRODUCT DIMENSIONS

ROUGH-IN OPENING DIMENSIONS			CABINET DIMENSIONS					
"A"	"B"	"C"	"D"	"E"	"F"	"G"	"H"	"J"
15" (38.1 cm)	34" to 35" (86.4 cm to 88.9 cm)	24" (61 cm)	14 ⅞" (37.8 cm)	33 ¾" to 34 ¾" (85.7 cm to 88.3 cm)	22 ⅞" (58.1 cm)	-	38 ⅞" (98.7 cm)	-

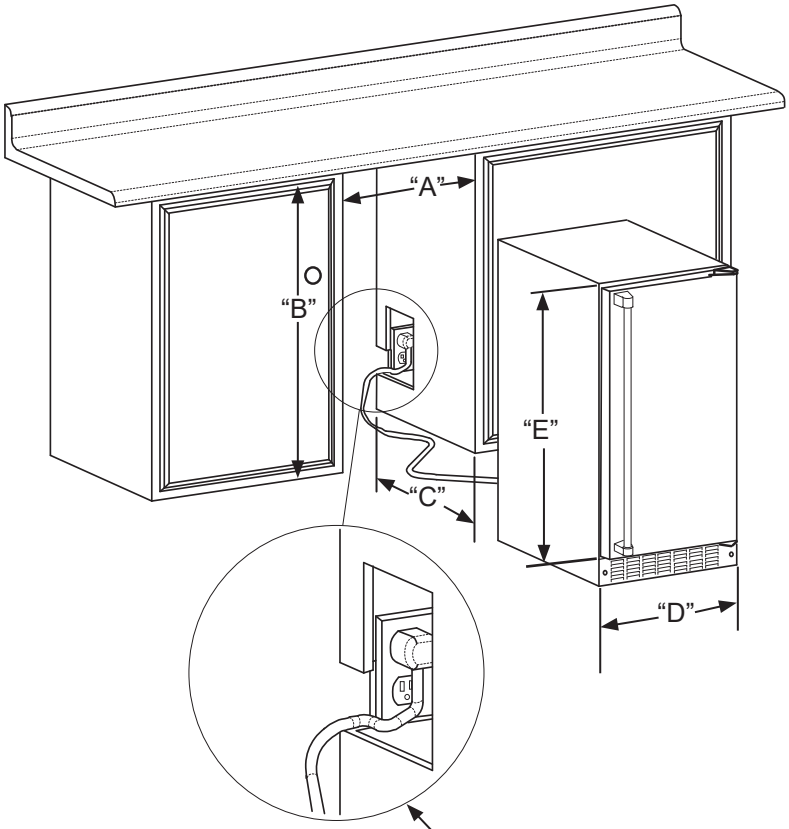

Solid Door Shown

If necessary, to gain clearance inside the rough-in opening, a hole can be cut through the adjacent cabinet and the power cord routed through this hole to a power outlet. Another way to increase the available opening depth is to recess the power outlet into the rear wall to gain the thickness of the power cord plug. Not all recessed outlet boxes will work for this application as they are too narrow, but a recessed outlet box equivalent to Arlington #DVFR1W us recommended for this application.

CUTOUT & PRODUCT DIMENSIONS

PRODUCT DATA	
ELECTRICAL REQUITEMENTS #	PRODUCT WEIGHT
115V/60Hz/15A	105 lbs (47.6 kg)

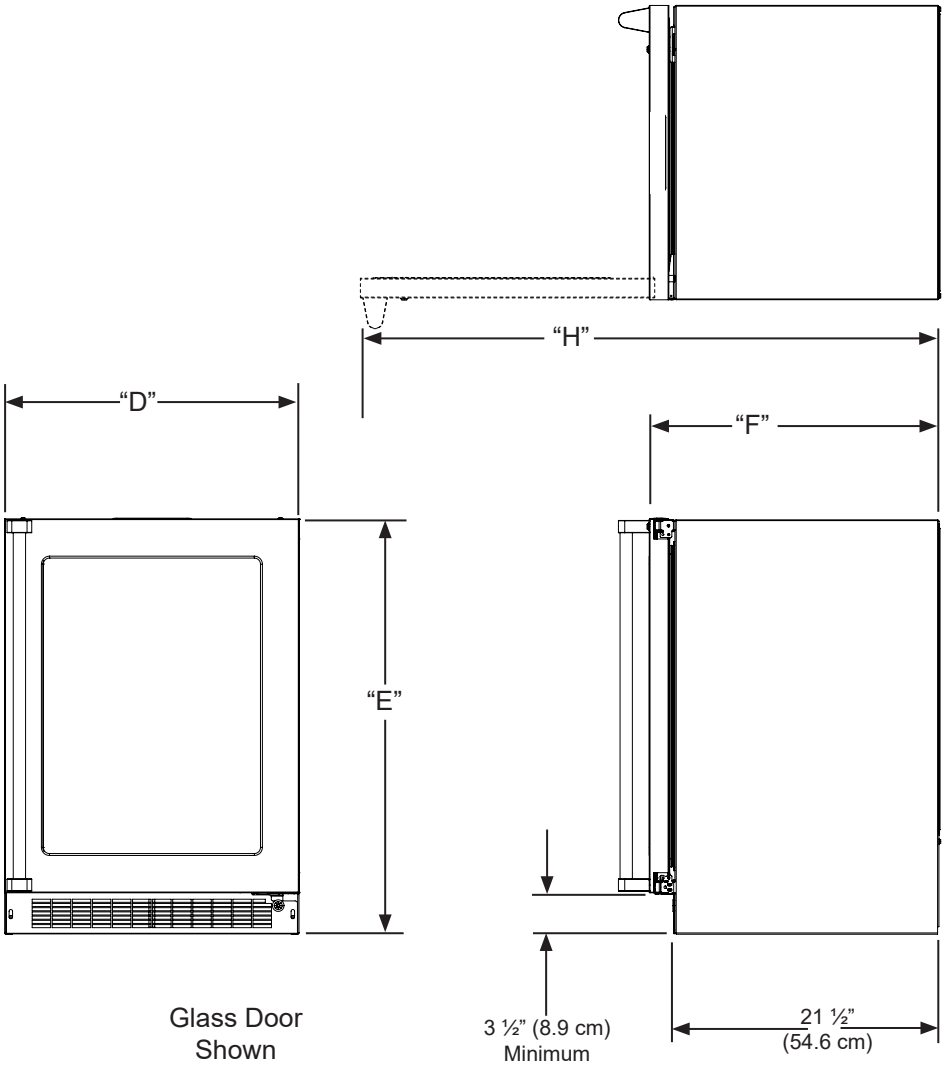

Minimum rough-in opening is required to be larger than the adjusted height of the cabinet.

A grounded 15-amp dedication circuit us required. Follow all local building codes when installing electrical and appliance.

Leveling Information

1. Use a level to confirm if the unit is level. Level should be placed along top edge and side edge as shown.

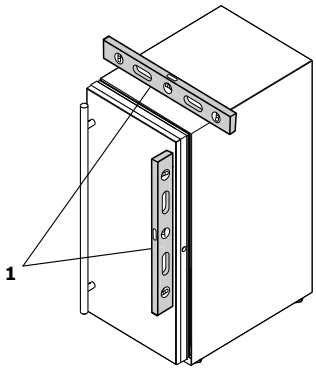

2. If the unit is not level, adjust the legs on the corners of the unit as necessary.

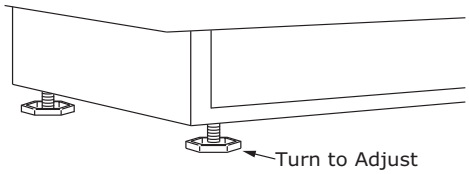

3. Confirm the unit is level after each adjustment and repeat the previous steps as needed.

Installation Tip

If the room floor is higher than the floor in the cutout opening, adjust the rear legs to achieve a total unit rear height of ⅛” (3 mm) less than opening’s rear height. Shorten the unit height in the front by adjusting the front legs. This allows the unit to be gently tipped into the opening. Readjust the front legs to level the unit after it is correctly positioned in the opening.

Installation

1. Plug in the power/electrical cord.
2. Gently push the unit into position. Be careful not to entangle the cord or water and drain lines, if applicable.
3. Re-check the leveling, from front to back and side to side. Make any necessary adjustments. The unit’s top surface should be approximately ⅛” (3 mm) below the countertop.
4. Install the anti-tip bracket.
5. Remove interior packing material and wipe out the inside of the unit with a clean, water-dampened cloth.

Side-by-Side Installation

Other Site Requirements

Units must operate from separate, properly grounded electrical receptacles places according to each unit's electrical specification requirements.

To ensure unobstructed door swing (opening both doors at the same time), ¼" (6.4 mm) of space needs to be maintained between the units.

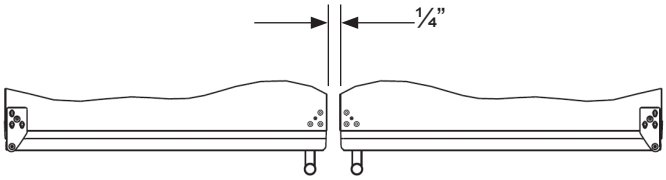

Hinge-by-Hinge Installation (Mullion)

When installing two units hinge-by-hinge, 13⁄16" (22 mm) is required for integrated models. Additional space may be needed for any knobs, pulls or handles installed.

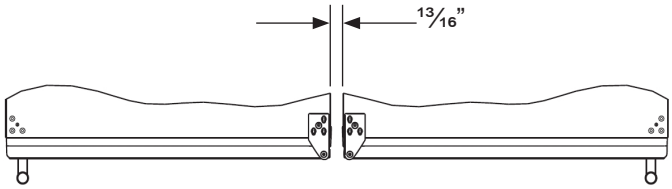

Stainless steel models which include the standard stainless handle will require 4 9⁄16" (116 mm) to allow both doors to open to 90° at the same time.

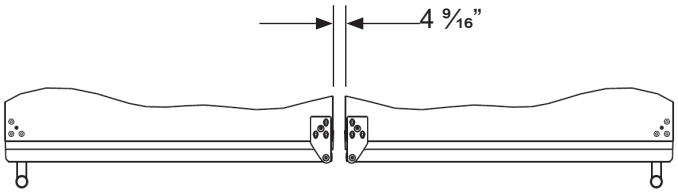

Hinge-by-Wall Installation

When installing a unit hinge-by-wall or adjacent cabinetry, 7⁄16" (11 mm) is required for integrated models.
Additional space may be needed for any knobs, pulls or handles installed.

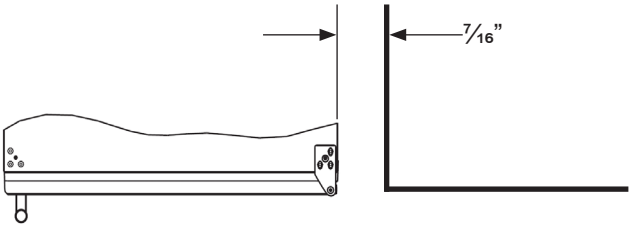

DOOR REVERSAL

Door Reversing Instructions

1. Open door.

2. Loosen screw #1 and #2 using a Philips Screwdriver on top and bottom hinge. Slide door and remove the door from the unit.

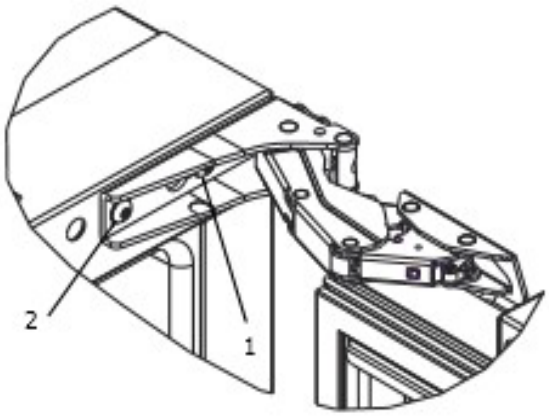

3. Once door is removed, using a Philips Screwdriver, remove screws from magnet actuator located on inside and bottom of door (On integrated models, magnet actuator will be located on bottom of door.

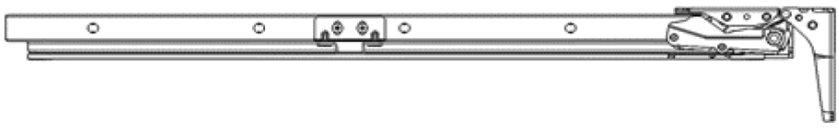

4. Remove caps from top of door. Using a Philips Screwdriver, install magnet actuator on opposite side. Install caps into opposite side.

5. Remove caps froms screw holes on opposite side (2 on top and bottom). Using a Philips Screwdriver, remove the 4 screws that you previously loosened.

6. Reinstall screws and caps on opposite side.

7. Once screws are partially installed, rotate the door 180°, align the hinge over #1 and slide into position. Tighten screws on top and bottom.

8. Door is now reversed.

INTEGRATED PANEL DIMENSIONS

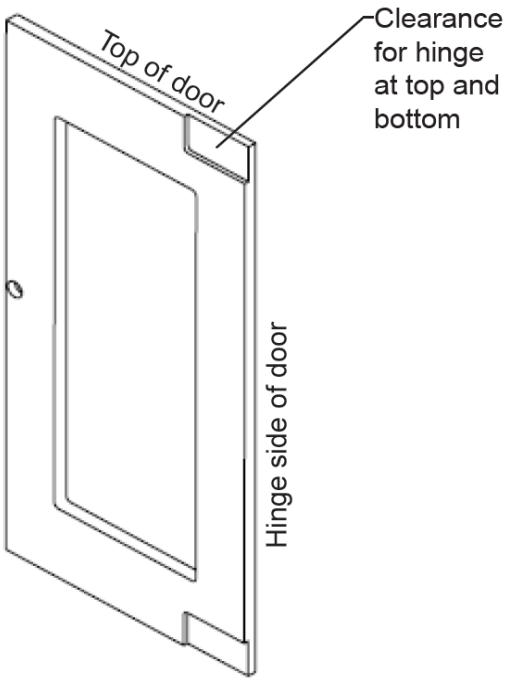

Left Hand Hinged Door
15" (38.1 cm) wide appliance

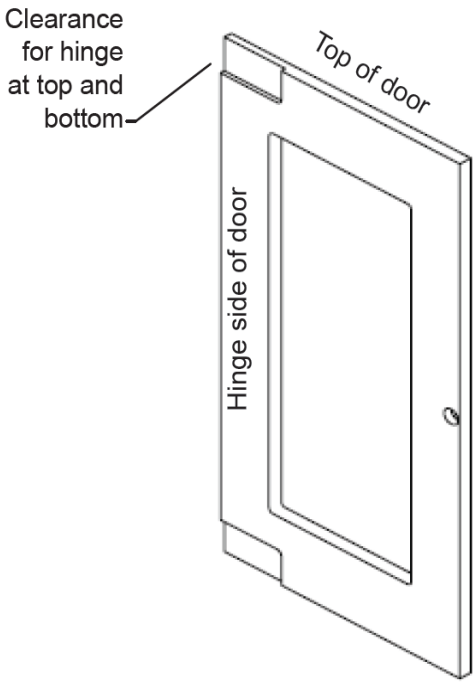

Right Hand Hinged Door
15” (38.1 cm) wide appliance

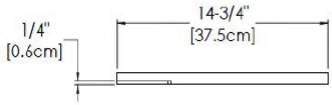

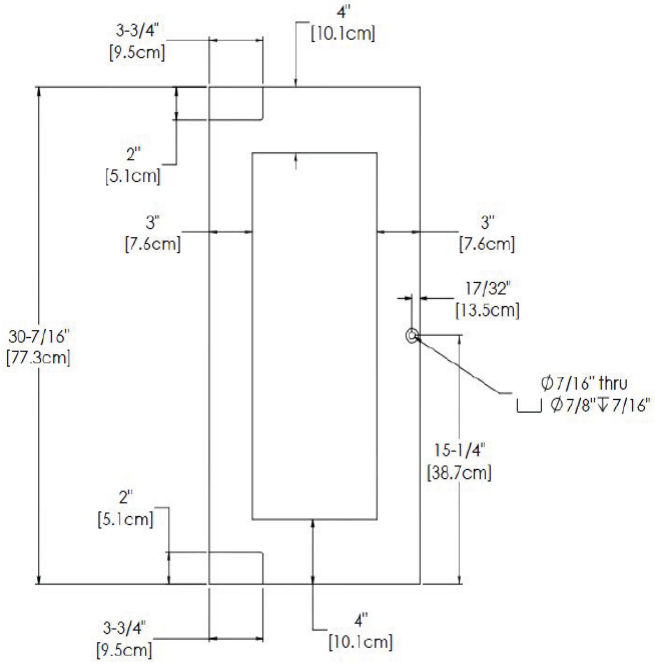

Left Hand Hinged Door
15” (38.1 cm) wide appliance

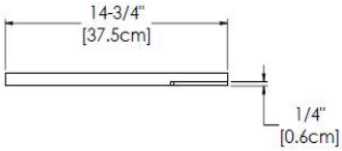

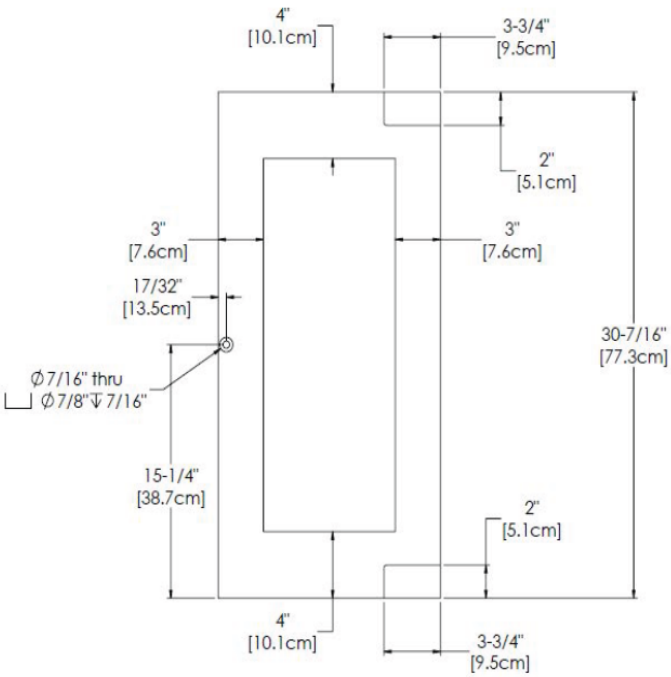

Right Hand Hinged Door
15” (38.1 cm) wide appliance

Integrated Door Panel Installation:

If you purchased an integrated panel model, your unit is equipped with articulated hinges to allow fully integrated built-in installations. Custom panel thicknesses of ⅝" (15 mm) and ¾" (18 mm) are accommodated.

CAUTION

It is important to use the factory provided grille that came with the product to assure proper air flow is maintained through the condenser. The use of a custom grille is not recommended and will void the warranty.

WARNING

Integrated panel models are designed for use with **built-in installations only**. Use in freestanding installations could result in personal injury.

Step 1: Removing the Door and Hinges

Hold the door secure in the closed position and remove Hinge Pin from the Upper Hinge using a 1/8” Hex Key tool. Slowly remove the door by sliding outward away from the cabinet and lift to remove off the Lower Hinge. If reversing the door, remove hinges from cabinet per Door Reversal Instructions.

WARNING

The articulated hinges have many pinch points. Carefully close / collapse the hinges as soon as the door is removed from the cabinet.

With a helper, and being careful not to scratch the cabinet or the door, slide the door to the side about ½ inch and remove the hinges and door from the unit.

⚠ WARNING

Use extreme caution with the articulated hinges. The hinge is self closing and many pinch points exist prior to built-in installation. **Do not remove the cabinet "Z" bracket from the top of the cabinet.**

Step 2: Remove the door gasket

With the door laying on a flat surface and starting at a corner of the door remove the magnetic door gasket from the interior side of the door. Set the gasket aside on a flat surface.

There are 10 holes in the gasket retainer extrusions, (3 on each side and 2 at the top and bottom which are used to fasten the panel to the front of the door. The screws are provided in the literature pack along with the door lock, which is provided on certain models.

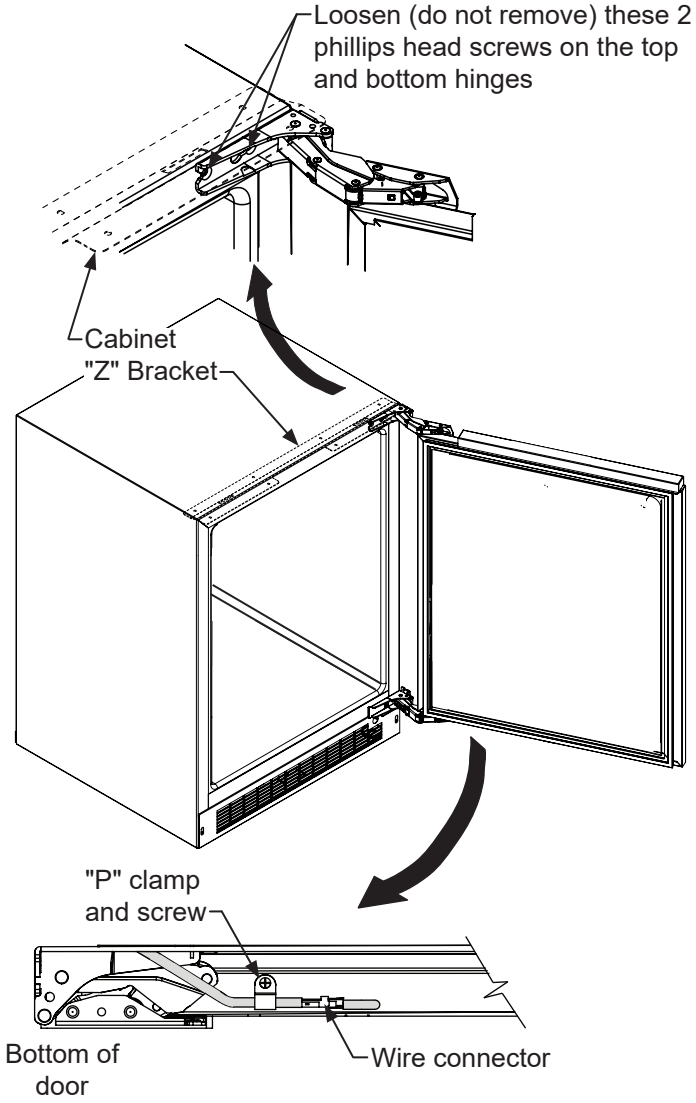

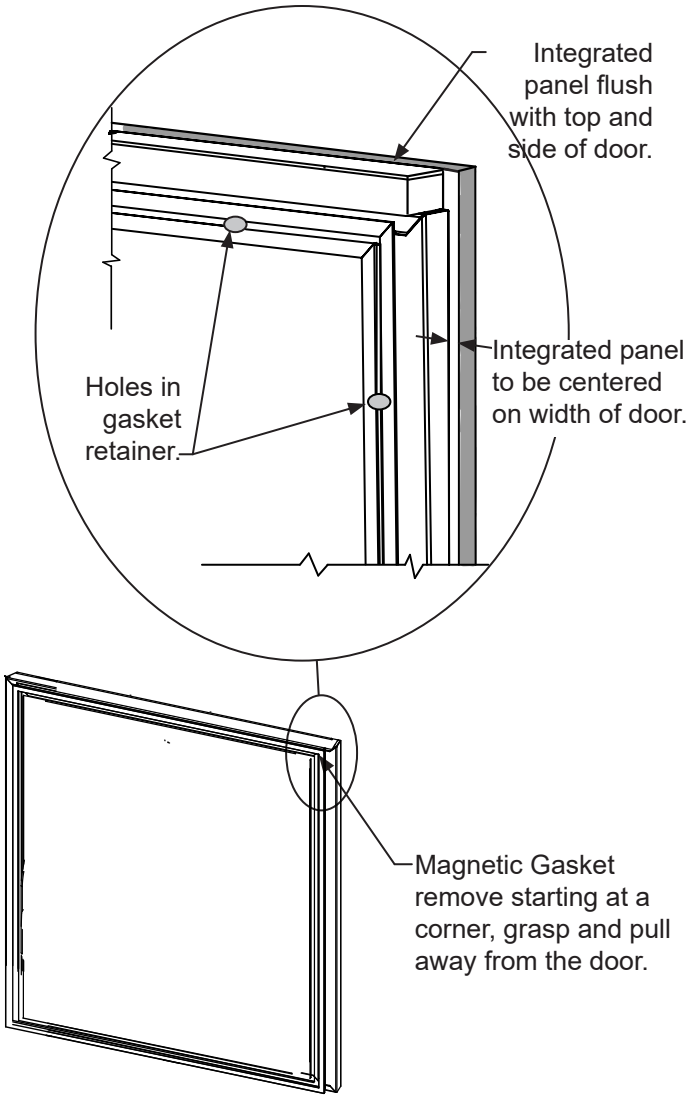

Step 3: Cut and drill the integrated panel

Depending on your model cut the integrated door panel to the dimensions shown. The window cut out is for glass door models only. If your appliance has a lock also drill the lock hole in the panel.

⚠ CAUTION

Weight of integrated door panel must not exceed 15 pounds (6.8 kg) for a solid door model or 10 pounds (4.5 kg) for a glass door model.

Material Type	#10 Wood Screw
Hardwood	⅛" (3.2 mm) Diameter. Pilot Hole
Softwood	7⁄64" (2.8 mm) Diameter. Pilot Hole

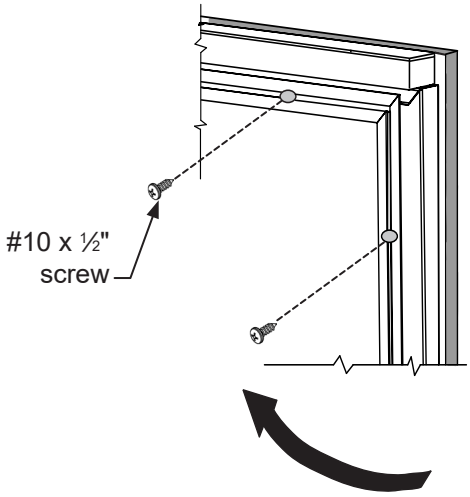

Step 4: Assemble the panel to the door

The preferred method of attaching the panel to the door is to clamp the panel to the door so it cannot move while drilling the screw pilot holes. Use bar clamps or "C" clamps with pads on the clamping surfaces that will not mar the panel or the door. The custom integrated panel should be flush with the top of the door and centered along the width of the door. Drill holes through the gasket extrusion using the 10 holes as pilot holes. Use the drill size from the chart above, being careful not to drill through the front surface of the panel. If the integrated panel is thinner than ⅝" (16 mm) thick shorter screws will have to be obtained. Fasten the panel to the door with the 10 screws provided in the literature pack. Remove the clamps and replace the gasket in the gasket extrusion channels of the door. Some force may be required to seat the gasket into the channels. Be sure the gasket corners are seated properly.

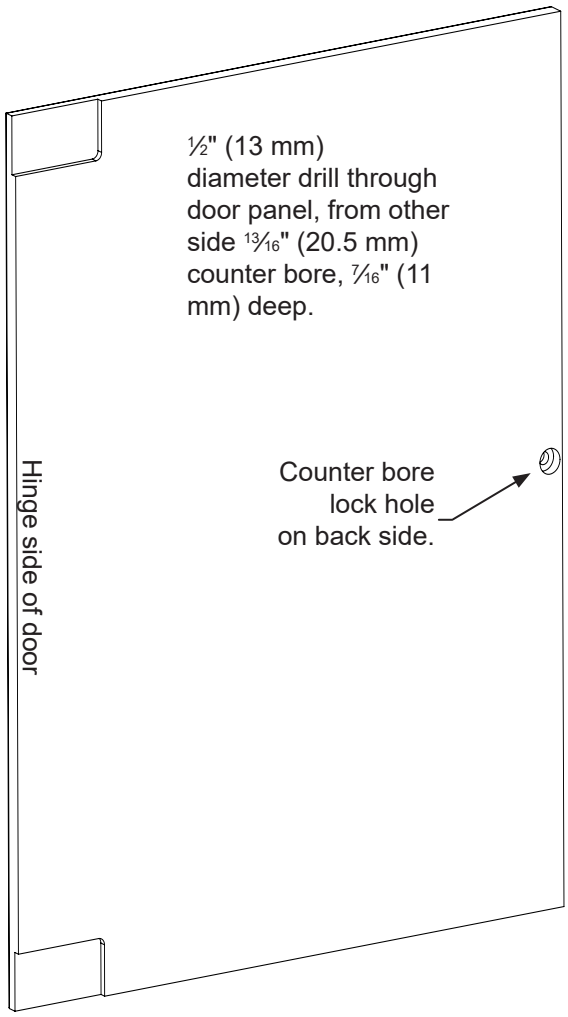

Step 5: Assemble lock parts

Two (2) lock extensions are provided with the lock. Use the longer extension for ¾" thick integrated panels and the shorter one for ⅝" thick integrated panels. Assemble the lock extension, cam stop washer, spring washer, and set screw to the lock as shown.

Install this lock assembly into the lock hole in the integrated panel and secure with the retaining nut on the back side with a 15 mm socket and ratchet. Make sure the key slot in the front of the lock is vertical.

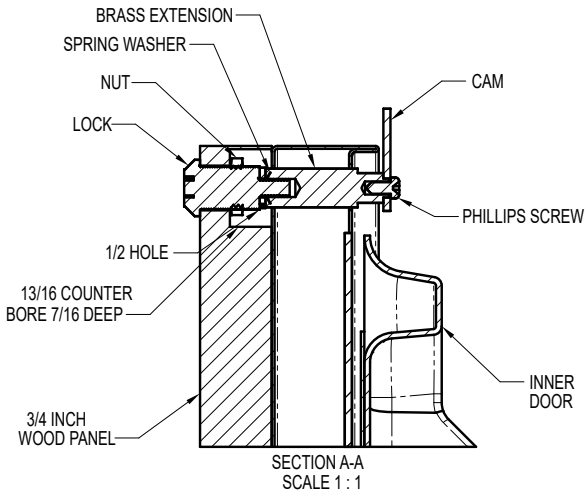

Step 6: Install lock cam

Attach the lock cam to the back of the lock assembly with the phillips head screw provided. Orient the lock cam vertically when installing on the lock.

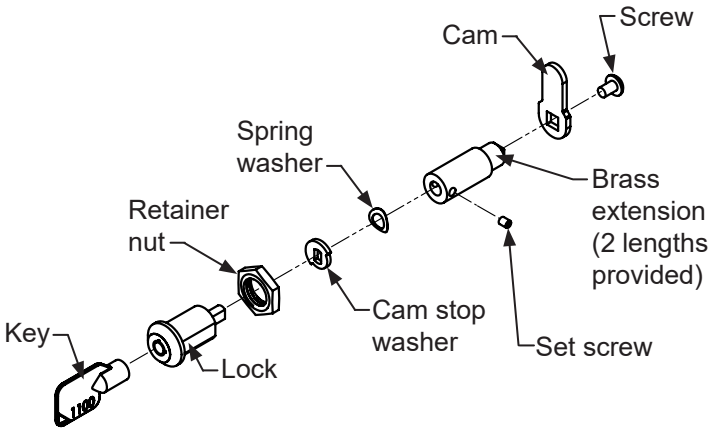

Step 7: Install the door

Carefully open the top and bottom hinges on the door being careful as there are many pinch points. Place the hinges over the 4 screws in the cabinet, 2 at the top and 2 at the bottom and slide the door into position. Tighten the 4 hinge screws with a phillips screwdriver.

Step 8: Secure the cabinet

Use the #8 x ¾" black screws from the literature pack to secure the counter top to the cabinet top through the holes in the cabinet "Z" bracket.

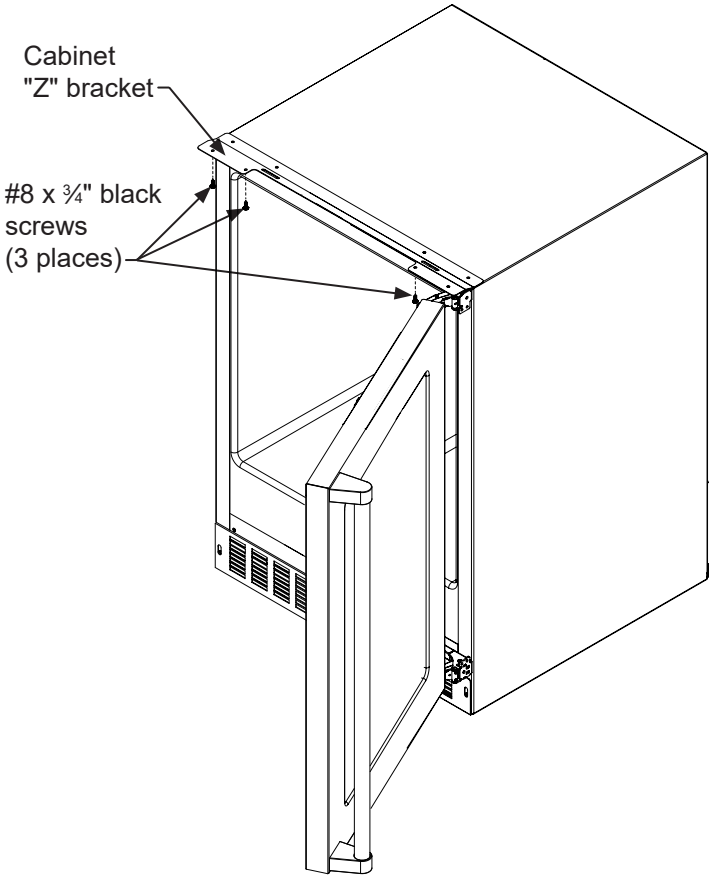

USING YOUR ELECTRONIC CONTROL

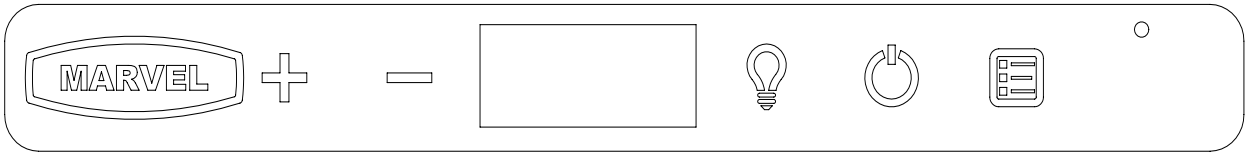

Control Function Guide

Function	Command	Notes
ON/OFF	Press and release.	Unit will immediately turn ON or OFF.
Adjust Light Color	Hold and press and release . Press to scroll through lighting options.	Option / Open Door / Closed Door 00 / White / White 01 / BrightShield® / BrightShield® 02 / (default) White / BrightShield®
Toggle Interior Light - Door Closed	Press and release to toggle interior light options; press again to deactivate.	Toggle depends on light color option above. Light output 50%.
Enable Sabbath Mode	Press and hold for 5 seconds and release.	The °F / °C symbol will flash briefly after 5 seconds. Interior light and display will go dark and remain so until user resets mode - unit continues to operate.
Disable Sabbath Mode	Press and release.	Display and interior light return to normal operation.
Clean Mode	Hold for 10 seconds to begin clean cycle.	Unit will return to normal operation upon completion of cleaning. See “Care and Cleaning” section for more information.
Showroom Mode	Hold and for 5 seconds.	The °F / °C symbol will flash. Display will be lit and interior light will function. **Unit will not cool.** Repeat command to return to normal operation.

Door Alert Notification

When the door is left open for more than 30 minutes:

- A tone will sound for several seconds every minute
- dr will appear in display
- Close door to silence alert and reset

First Use

Initial startup requires no adjustments. When plugged in, the unit will begin operating under the factory default settings. If the unit was turned off during installation, simply press and the unit will immediately switch on. To turn the unit off, press .

BrightShield®

This model includes BrightShield® with Vyv™ Antimicrobial Light Technology.

BrightShield®

- Kills* and prevents the growth of viruses, bacteria, fungi, yeasts, mold, and mildew
- Provides continuous antimicrobial action to keep surfaces clean
- Is approved for continuous use around people, pets, & plants
- Reduces odors caused by bacteria, fungi, yeasts, mold, and mildew
- Creates a cleaner environment for food, beverages, & ice

* Testing on a non-enveloped virus (MS2 bacteriophage) showed a 97.12% reduction in controlled laboratory testing in 8 hours on hard surfaces. Testing on SARS-CoV-2 (enveloped virus) showed a 98.45% reduction in controlled laboratory testing in 4 hours on hard surfaces. Testing on MRSA E. coli showed 90%+ reduction in controlled laboratory testing in 24 hours on hard surfaces. Results may vary depending on the amount of light that is reaching the surfaces in the space where the product is installed and the length of time of exposure. Use of Vyv™ Antimicrobial Light Technology is not intended to replace manual cleaning and disinfection practices.

BrightShield® is most effective when used continuously. Your unit is factory-set to use BrightShield® lighting whenever the door is closed and standard bright white when the door is open. See Control Operations sections for details and other options.

For more information about BrightShield® visit www.marvelrefrigeration.com

For more information about Vyv™ Antimicrobial Light Technology visit www.vyv.tech

Water Supply

CAUTION

Observe and follow all local building codes when installing this appliance.

Use ¼" outside diameter copper tubing for your water supply which is available at any local hardware or plumbing supply store. Bend the ¼" copper tubing to suit your installation being sure not to kink the tubing. Purchase enough copper tubing length and coil it behind the unit to form a "service loop" which will allow the appliance to be pulled out from the installation for servicing or cleaning. Connect the copper tubing to the "top side" of a cold water pipe to prevent the ice-maker from plugging with sediment.

A shutoff valve is recommended on the water supply line to ease servicing the appliance. **NOTE: A SELF-PIERCING TYPE VALVE IS NOT RECOMMENDED** as they are prone to clogging with sediment which will create pressure drop reducing the water supply to the unit.

Connect the copper tubing water supply to the water valve inlet with a ¼" compression nut fitting. Secure the water supply line to the back of the cabinet with the screw and clamp provided in the corner of the back panel.

Water pressure must be at a minimum of 20 psi for proper operation and a maximum of 120 psi.

Make certain all water connections are watertight after installation. Form the tubing so that it will not vibrate against the cabinet body or kink when your appliance is set in position.

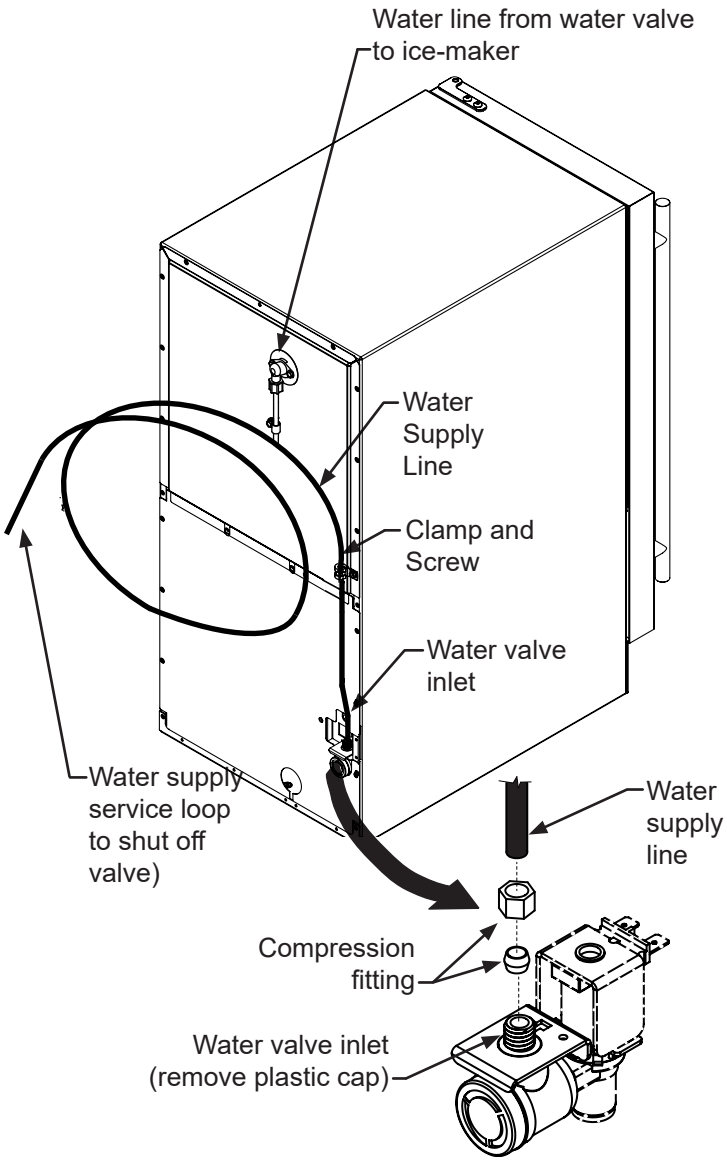

CAUTION

To prevent water leaks:

- The water line fitting is to be used with copper tubing only. Do not use with plastic tubing.
- Do not use any thread sealers on this water line fitting.

NOTE

Reverse osmosis (RO), softened water, and de-ionized water are not recommended as they will adversely affect the quality of the ice.

Procedure for Testing Drain System (both gravity and drain pump models)

Drain pump models have a safety feature that will interrupt power to the unit if a high-limit condition occurs to prevent flooding. This safety feature can be initiated by a restriction in the drain system and will continue until high-limit condition is corrected, at which time power will be restored to the unit. Power interruption can be detected when no icons are visible in the display area of the user interface. Once power is returned, a startup chime will sound followed by a self-test, and "OFF" should be visible in the display area.

1. Plug the ice machine into 115v power supply.
2. Place unit in the final installation location.
3. Turn the unit off via the user interface (display will indicate “OFF”). The drain pump will still be operational during off mode if the unit has one.
4. Slowly pour 3-qts of water into the ice storage bin. All water should drain completely.
5. If water drains fully and without power interruption, the drain system has been successfully tested and further installation of the ice machine can be continued.
6. If the water does not drain or a power interrupt occurs, check the following:
   a. There are no kinks or restrictions in the drain line. (Note: Drain line needs to be cut to the required length and any excess tubing should be removed to prevent possible restrictions).
   b. Drain line was run according to the guidelines for maximum allowable rise and run as shown in the table below:

Rise Above Floor Level	8 ft.	9 ft.	10 ft.
Maximum Allowable Drain Line Length	20 ft.	15 ft.	10 ft.

   c. Your drain line is plumbed into an open drain (Figure1).
   d. The vent tube on the back of the unit is open (Figure 2).

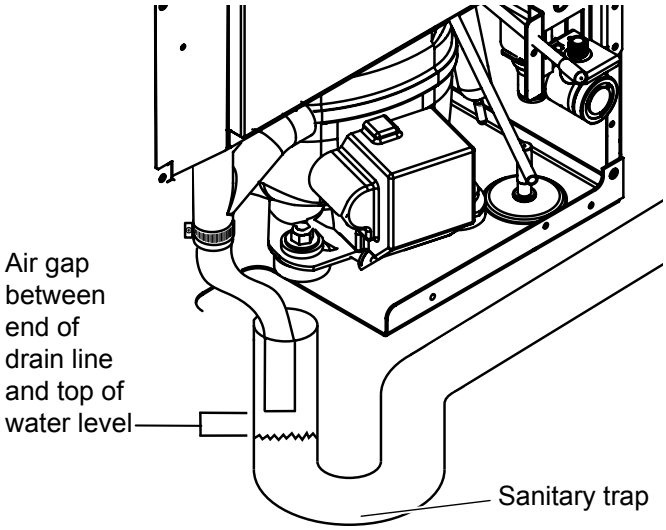

Figure 1: Example of an open drain.

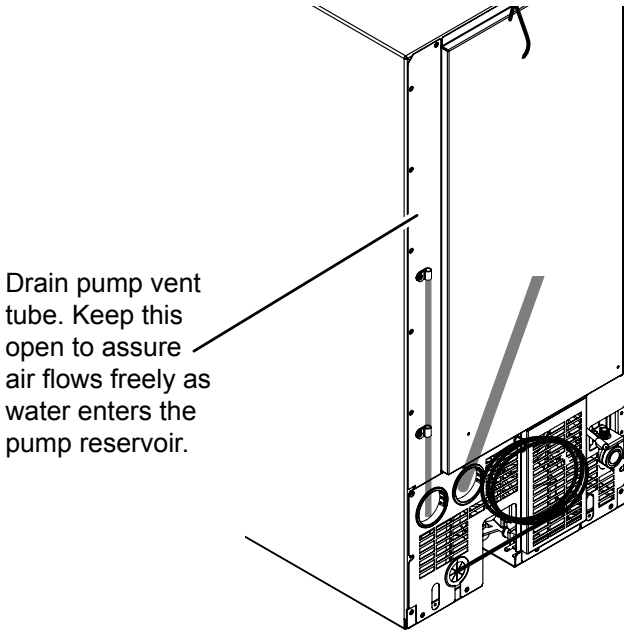

Figure 2: Location of vent tube.

7. After checking the above requirements, repeat step 4 and verify the water drains completely without power interruption. If problems persist call a qualified service technician and/or plumber.

Drain

Model numbers including “CL” or “NB” do not include a factory installed drain pump.

Model numbers including “CP” or “NP” include a factory installed drain pump.

Drain Connection

CAUTION

If your Marvel unit did not come with a factory installed drain pump you must use a gravity style drain connection. For assistance in determining if your unit has a pump please contact Marvel. The floor drain must be large enough to accommodate drainage from all attached drains. Follow these guidelines when installing drain lines to prevent water from flowing back into the ice maker storage bin and/or potentially flowing onto the floor, which may result in personal injury or property damage

NOTE

Drain can NOT be located directly below the unit. Unit has a solid base that will not allow the unit to drain below itself. There is a possibility that hose connections may have loosened during shipment. Verify all connections and fittings are free from leaks.

CAUTION

This equipment is to be installed with adequate backflow protection to comply with applicable federal, state and local codes.

Gravity Drain

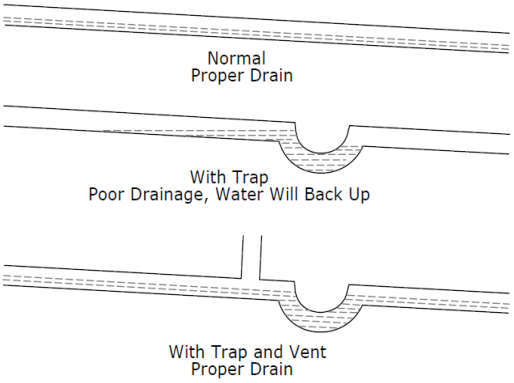

A gravity drain may be used if:

- Drain line has at least a 1” drop per 48” (approximately 2 cm drop per 100 cm) of run.
- Drain line does not create traps and is vented per local code.

1. Cut the pre-installed drain tube to length.
2. Connect to your local plumbing per the local code.
3. If necessary, insulate drain line to prevent condensation.

CAUTION

Failure to connect water supply or drain line connections properly can result in personal injury and property damage. Gravity drain connections must be routed downward from the rest of the unit at the rate of 1/4” per foot (1 cm per 50 cm).

Factory Installed Drain Pump

If your drain line will run up to a stand pipe, disposal or spigot assembly, or does not otherwise meet the requirements for a gravity drain, you may have ordered a pre-installed drain pump. If you need to install a drain pump into your unit, see Drain Pump section in the Owner’s Guide.

See next page for typical installations requiring a drain pump.

Stand Pipe

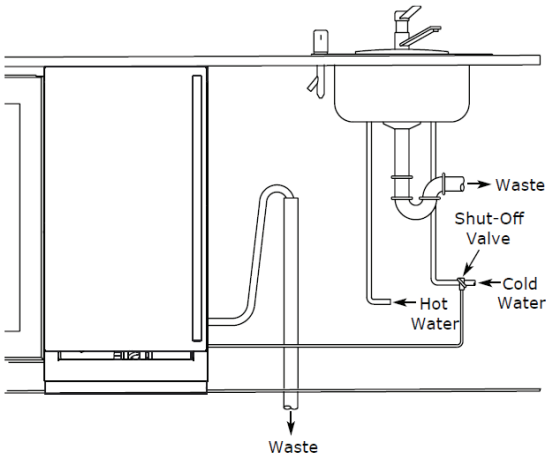

Disposal Assembly

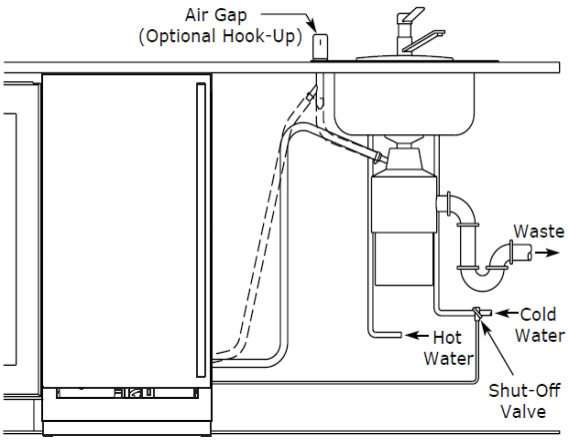

Y-Branch Tailpiece

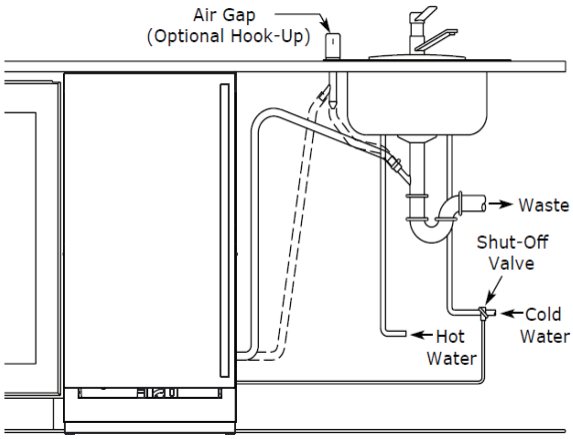

NOTE

The maximum lift for the factory-installed drain pump is 10 feet. This must be done as close to the rear of the unit as possible.

The Ice Making Process

Your ice machine is unique in how it forms ice with fractional freezing to form a slab of ice that is clear and has less dissolved solids than the water it is produced from. This is accomplished by running water over the cold evaporator plate which gradually freezes the water to produce the ice slab. Pure water freezes first, leaving the dissolved solids in the residual reservoir water to provide clear ice.

When the ice slab reaches the correct thickness, the ice sheet is released and slides onto the grid cutter. Here, the ice slab is cut into squares by the grid cutter's heated wires. The water containing the dissolved minerals is drained after each freezing cycle. Fresh water enters the machine for the next ice making cycle.

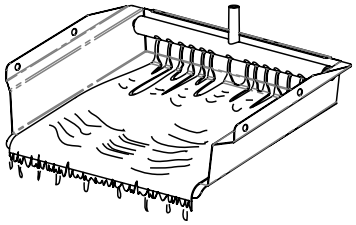

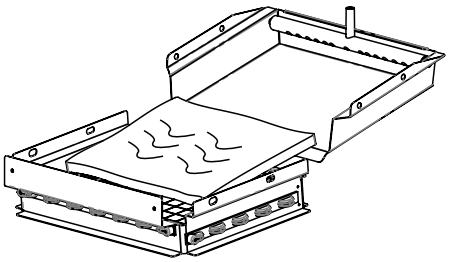

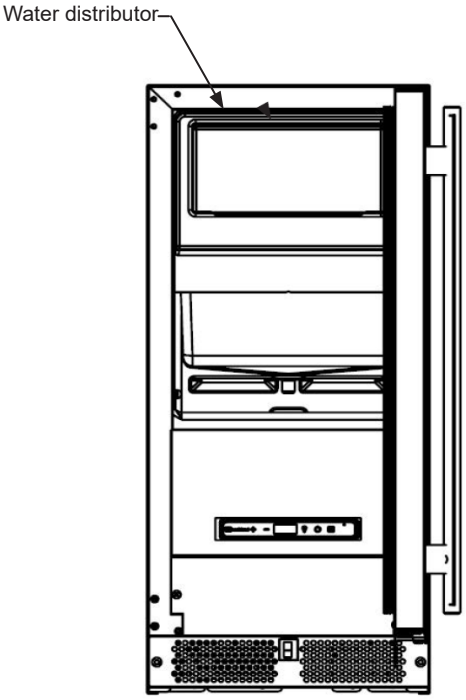

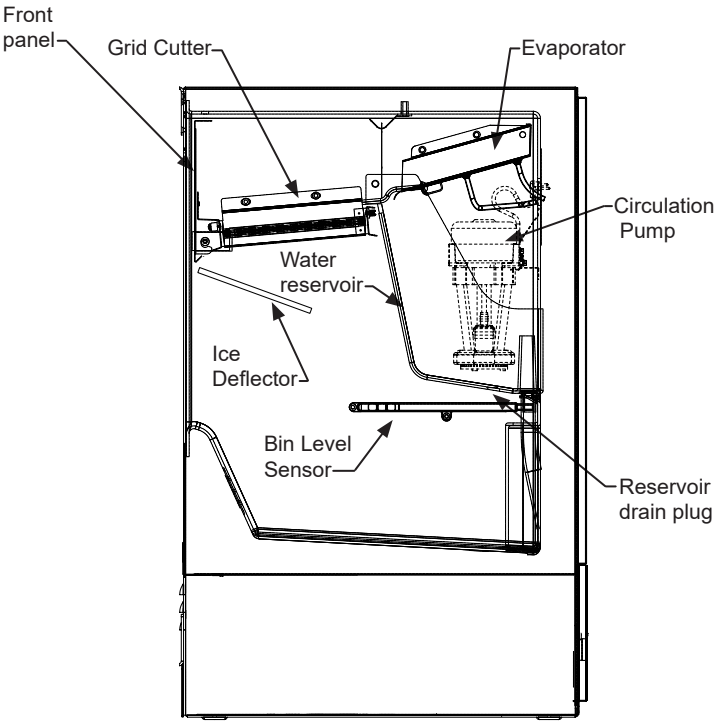

ICE MAKER OPERATION

The ice machine will keep producing ice until the ice machine's bin is full and will restart automatically when ice needs to be replenished in the bin. The ice bin is not refrigerated, and some melting will occur by design to preserve the ice quality and clarity. Allow your ice machine to run for 24-48 hours to accumulate ice in the ice machine's bin.

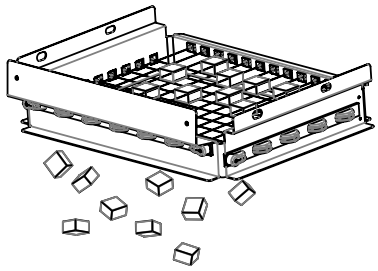

The bin level sensor is located in the ice bin, it senses when the ice supply is low or full and starts or stops the ice making process accordingly.

NOTE

If the water supply is turned off to the ice machine be sure to set the electronic control to the "OFF" position or remove power to the unit.

Ice Production

In normal mode the ice machine will produce up to 39 pounds (17.7 kg) of clear ice in a 24-hour period when installed in a 72°F ambient with a 55°F water supply.

NOTE

"Initial" ice production and ice accumulated in the storage bin will vary significantly. This is normal. During the first 24-hours of operation the unit will produce up to 39 lbs of ice at the above ambient and water temperature conditions, but when starting with an empty ice storage bin, the storage bin may only accumulate up to 18 lbs of ice. By design, the ice storage bin is maintained at a temperature slightly above freezing to allow the stored ice to slowly melt, to preserve the ice quality and clarity and assure a constant supply of fresh ice. As ice is accumulated in the bin, the ice production rate will overcome the ice melt and the storage bin will fill to capacity.

New Sounds

The ice machine will make sounds that are different than your household refrigerator. Because these sounds are new to you they may be of a concern but are most likely normal. The ice production process will make noises that are not typical in a refrigeration product, ice falling onto hard surfaces, water cascading across the evaporator, and valves opening and closing. Following are some of the sounds that you may hear:

A buzzing sound will be heard when the water valve opens to fill the water reservoir.

A rattling noise which could be water flowing through the water line.

A splashing sound when water is flowing over the evaporator plate and into the water reservoir.

A "thud" when the ice slab is released from the evaporator plate and slides onto the grid cutter.

"Clicks" when the cubes fall into the ice storage bin.

A gurgling sound which is refrigerant flowing in the ice machine.

An air noise from the condenser fan.

Clean reminder:

While cleaning is needed, UI will alternate between "CL" and "ICE" every 3000 cycles to indicate that the unit needs to be cleaned. Over time, mineral build-up on the cold evaporator plate can occur which can adversely affect the quality of your ice. This build-up is dependent on your water source and usage. Normal ice production will continue while the "CLEAN" reminder is displayed. The "CL" clean reminder will reset after your ice machine has completed the cleaning cycle and will not occur for another 3000 cycles.

Clean mode:

To ensure maximum performance and ice quality, it is recommended to clean your ice machine once every six months. This simple cleaning routine will also ensure water and energy use continues at optimum efficiency.

NOTE

Homes with poor water quality or high clear ice usage might require more frequent cleaning.

To clean your ice machine you will need to purchase a "nickel safe" ice maker cleaner. You can order ice machine cleaner (part # S41013789) at marvelrefrigeration.com.

CAUTION

Use only Marvel-approved ice machine cleaner and follow all label warnings and directions. Incorrect chemical usage, and any damage that may result, is not covered by warranty.

Once you have your cleaner:

Turn the ice machine off by pressing and holding the "ON/OFF" icon for 3 seconds. "OFF" will be displayed on the control. Remove all ice from the ice bin. Drain the water from the water reservoir by removing the black plug from the bottom of the fresh water reservoir. After the water is drained, replace the plug in the bottom of the reservoir. Allow all of the ice to fall from the evaporator plate and remove any ice from the grid cutter. If there is ice embedded in the grid cutter wires, wait for it to melt and fall out. **Do not try to remove ice that is embedded in the grid cutter wires as that may break the wires.** Once ice has melted, machine is ready to be cleaned.

CAUTION

Forcing ice through the grid cutter will break the grid cutter wires.

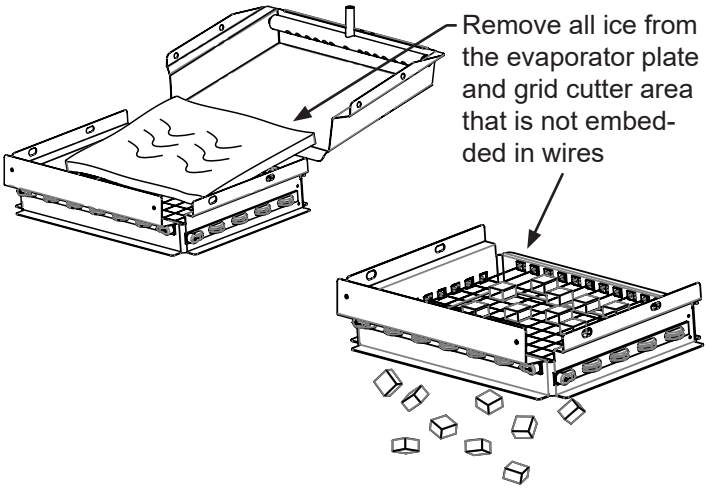

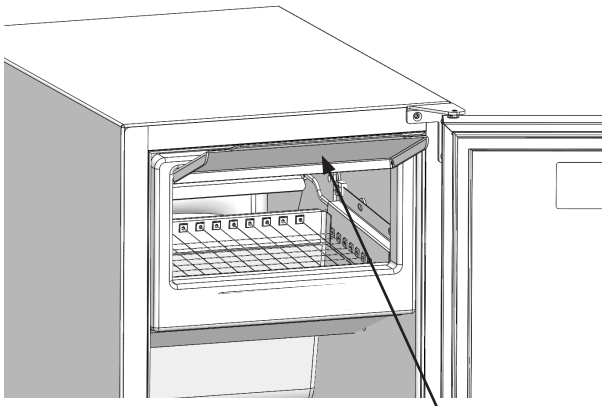

Figure 26

Lift fascia door up to access evaporator plate

Remove ice from bin. Pull plug from the reservoir. Once reservoir is empty, replace plug. Hold the button for 10 seconds to show "CL" on the display. Lift Fascia door to access evaporator plate. Lift or remove splash shield to expose evaporator plate. Using 1-3 ounces of cleaner, pour cleaning solution slowly on evaporator plate so it flows down into the fresh water reservoir.

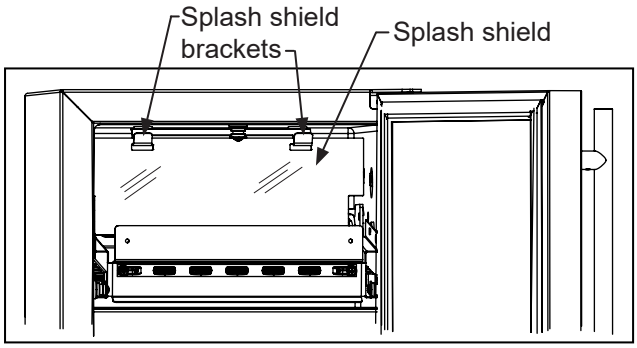

Replace the splash shield if removed.

After the cleaning cycle is completed, verify that all build-up has been removed. If not, repeat the clean cycle procedure.

Clean inside of unit with a clean, damp rag before ice making cycle begins.

Replace the splash shield if removed.

Clean cycle time is approximately 45 minutes.

Ice maker will automatically return to ice making once clean cycle is complete.

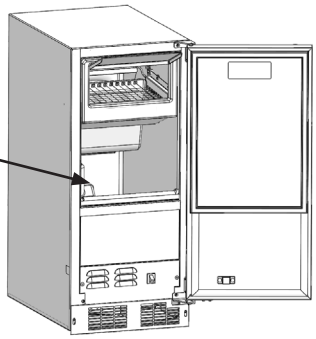

Remove all of the ice from the ice bin

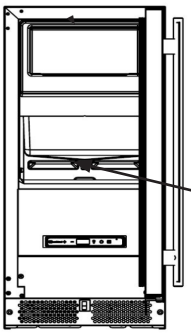

Remove the black reservoir drain plug from the bottom of the reservoir.

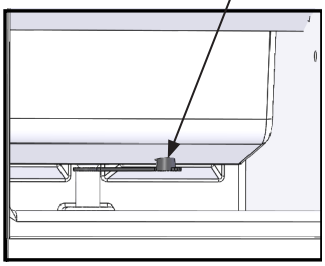

Evaporator plate

Pour cleaning solution slowly onto the front edge of evaporator plate behind the grid cutter.

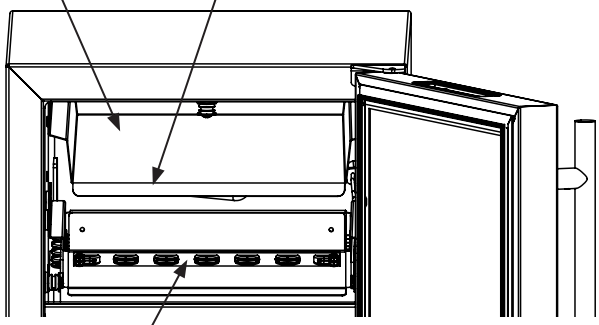

Grid cutter

Front Grille

Be sure that nothing obstructs the required air flow openings in front of the cabinet. At least once or twice a year, brush or vacuum lint and dirt from the front grille are.

CAUTION

SHOCK HAZARD: Disconnect electrical power from the appliance before cleaning with soap and water.

Cabinet

The painted cabinet can be washed with either a mild soap and water and thoroughly rinsed with clear water. NEVER use abrasive scouring cleaners.

Interior

Wash interior compartment with mild soap and water. Do NOT use an abrasive cleaner, solvent, polish cleaner or undiluted detergent.

Care of Appliance

1. Avoid leaning on the door, you may bend the door hinges or tip the appliance.
2. Exercise caution when sweeping, vacuuming or mopping near the front of the appliance. Damage to the grille can occur.
3. Periodically clean the interior of the appliance as needed.
4. Periodically check and/or clean the front grille as needed.

In the Event of a Power Failure

If a power failure occurs, try to correct it as soon as possible. Minimize the number of door openings while the power is off so as not to adversely affect the appliance's temperature.

Light assembly replacement

All models use an LED to illuminate the interior of the appliance. This component is very reliable, but should it fail, contact a qualified service technician for replacement of the LED.

If the ice machine is moved, not used for an extended period of time, or will be in an area that will be near freezing temperatures, it is necessary to remove any remaining water in the ice-making system.

CAUTION

This ice machine must have all water drained and removed to prevent ice machine damage as well as possible water damage to the surrounding area in freezing conditions. These damages are not covered under warranty.

CAUTION

Do not use any type of anti-freeze or other solution as a substitution for properly draining the ice machine.

Clean the Ice Machine

Cleaning the ice machine will help prevent mold and mildew growth as well as sanitize the ice machine for storage or when it is put back into service.

WARNING

Electrocution Hazard

Risk of electrical shock or personal injury could occur due to moving components, if machine compartment access cover is removed before unplugging the ice machine.

CAUTION

Winterization: If the unit will be exposed to temperatures of 40°F (5°C) or less, these steps must be followed.

Draining and Removing Water from the Ice-Making System with a Gravity Drain.

1. Turn off the water supply to the ice machine.
2. Disconnect the water supply fitting at the inlet of the water valve.
3. Change the electronic control to the "CLEAN" position for approximately one (1) minute. This will energize and open the water valve and remove most of the water from the water valve and the water valve's outlet water line to the reservoir.
4. Change the electronic control to the "OFF" position. This will energize and open the drain valve to drain the reservoir and the ice machine drain system.
5. Unplug the ice machine from the electrical outlet.
6. Remove the access cover from the rear of the ice machine.

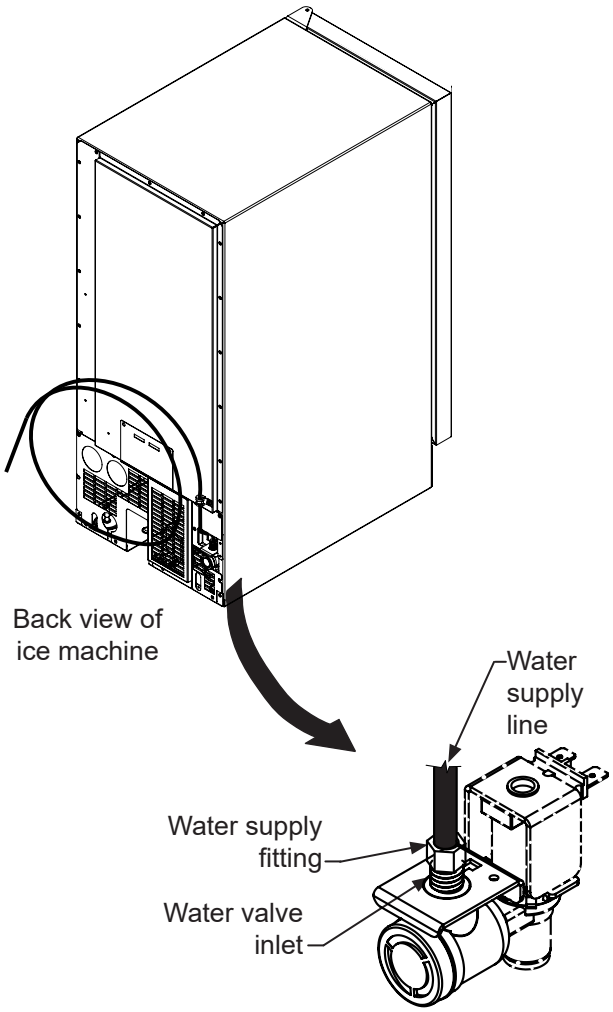

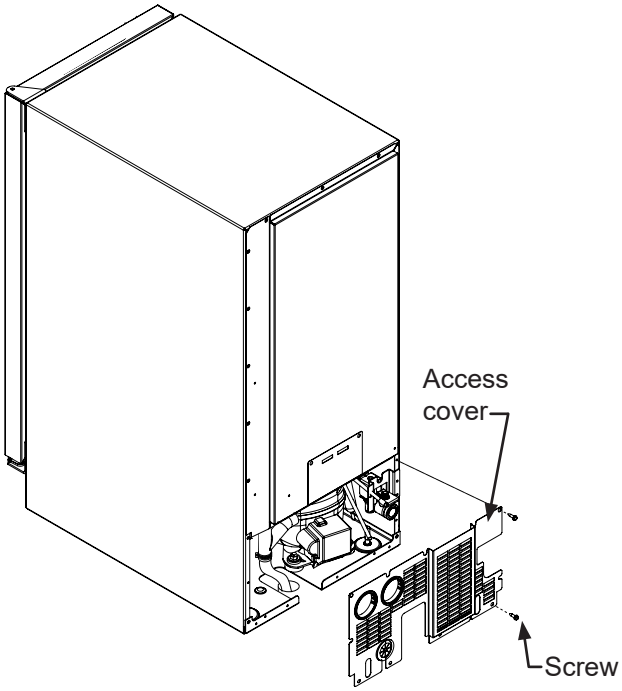

7. Disconnect the water valve's outlet water line to the reservoir and drain the remaining water left in the water line trap area.

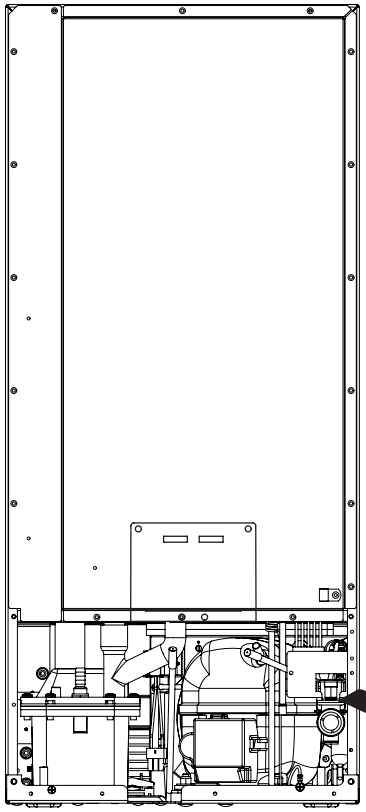

To disconnect the water outlet line: Push up on the white collar and pull the plastic water line from the bottom of the water valve.

To reconnect the water outlet line: Simply insert the plastic tubing into the white collar and push until it stops (about ½", 12 mm, of water line will enter the valve).

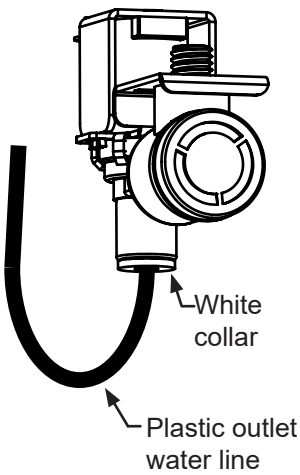

8. Reconnect the water valve outlet water line.
9. Reinstall the ice machine's access cover.
10. Clean and dry the ice machine's storage bin.
11. Prop the door open for air circulation to prevent mold and mildew.
12. Leave the water supply line disconnected or reconnect the supply line and leave it shut off. Do NOT turn the water on and allow water to enter back into the water valve.

Draining Water for Factory Installed Drain Pump Applications

Follow steps 1 through 12 for the gravity drain then do the following:

13. Install the winterization plug in the water drain hole inside the ice bin.

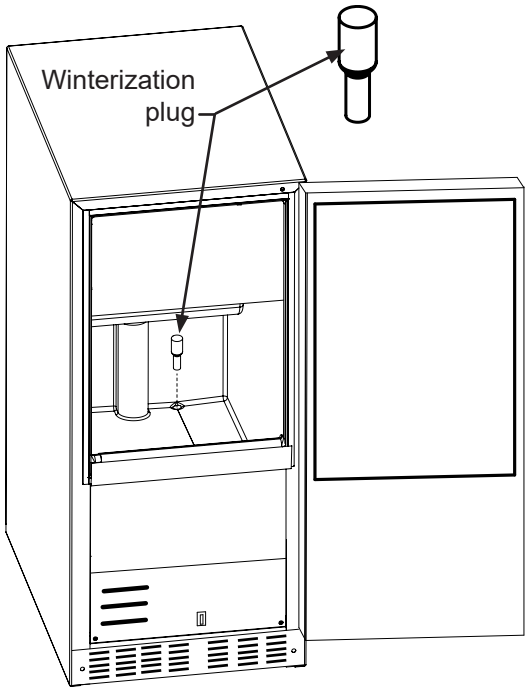

14. Remove the top clamp from the vent tube, for easier access for the air hose.
15. Apply air pressure (approximately 10 psi) to the end of the vent tube which will purge the remainder of the water from the drain pump and the drain line.
16. Reinstall the vent tube and clamp to the back of the ice machine and remove the winterization plug from the ice bin and save it for future use.

To Restart the Ice Machine

1. Reconnect or turn on the water supply line.
2. Reconnect drain tubing if removed.
3. Plug in the power cord to a wall outlet and turn the ice machine on.
4. Check the water inlet, drain lines, and fittings for any water leaks.
5. Check drain pump (if equipped) operation by pouring approximately two (2) quarts of water into the ice storage bin. The drain pump should activate and discharge water. Check for water leaks at all hose connections.

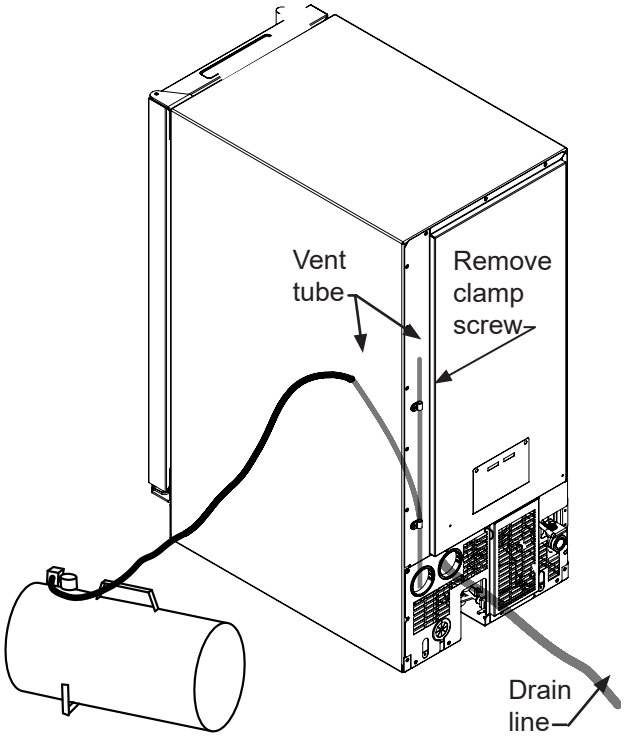

Drain Pump Removal Instructions:

1. Unplug the ice machine from the electrical supply and remove the rear access cover from the ice machine.
2. Remove the front panel and the toe grille from the front of the ice machine.
3. Remove the front and rear drain pump brackets.
4. Unscrew the 3 hose clamps and remove the 3 hoses from the front of the drain pump.
5. Unscrew the leveling leg in the back corner until the end of the threaded portion is flush with the threaded nut insert in the base.

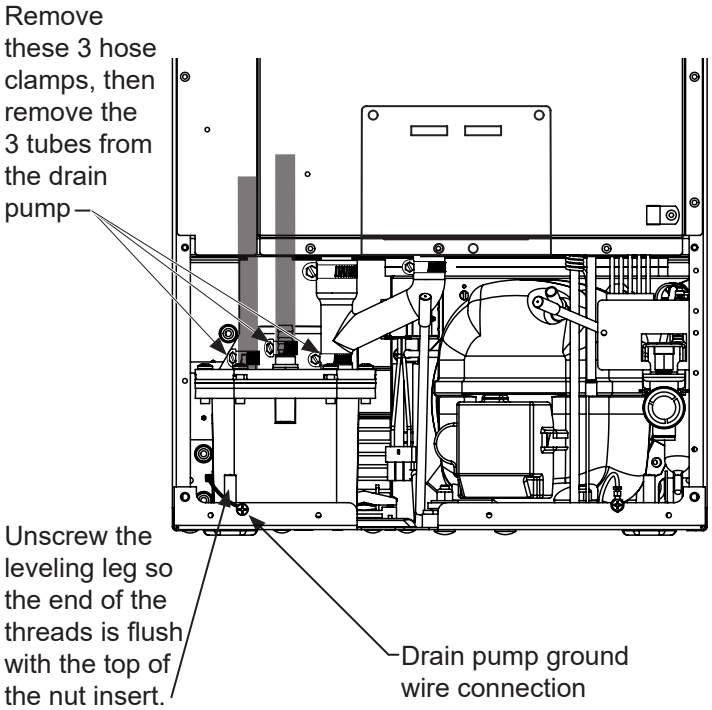

OBTAINING SERVICE

If Service is Required:

- If the product is within the first year warranty period please contact your dealer or call Marvel Customer Service at 616.754.5601 for directions on how to obtain warranty coverage in your area.
- If the product is outside the first year warranty period, Marvel Customer Service can provide recommendations of service centers in your area. A listing of authorized service centers is also available at www.marvelrefrigeration.com under the service and support section.
- In all correspondence regarding service, be sure to give the service number, serial number, and proof of purchase.
- Try to have information or description of nature of the problem, how long the appliance has been running, the room temperature, and any additional information that may be helpful in quickly solving the problem.
- The table below is provided for recording pertinent information regarding your product for future reference.

For Your Records	
Date of Purchase	
Dealer's name	
Dealer's Address	
Dealer's City	
Dealer's State	
Dealer's Zip Code	
Appliance Serial Number	
Appliance Service Number	
Date Warranty Card Sent (Must be within 10 days of purchase).	

Before You Call for Service

If the appliance appears to be malfunctioning, read through this manual first. If the problem persists, check the troubleshooting guide below. Locate the problem in the guide and refer to the cause and its remedy before calling for service. The problem may be something very simple that can be solved without a service call. However, it may be required to contact your dealer or a qualified service technician.

Troubleshooting guide:

Ice Machine Operation

Ice machine does not operate

Is the ice machine's power cord plugged in? Plug the power cord into a grounded 3 prong outlet.

Is the electronic control showing the "ICE" position? Check the control to be sure it is in the "ICE" position.

Is a fuse blown or a circuit breaker been tripped? Replace a blown fuse or reset a tripped circuit breaker.

Is the temperature of the room cooler than it normally is? The minimum room temperature is 55°F (13°C). The bin thermistor may be sensing the room temperature and shut off before the bin is full of ice. If the room temperature remains low the ice machine may not restart.

Is there a drain pump in the ice machine? The drain pump is designed to temporarily shut the unit off when large quantities of water create a high-limit condition. Wait a few minutes as the drain pump will continue to operate to dispose of the excess water. If there is still water in the ice bin check the drain pump vent line and drain line for obstructions or kinking.

The ice machine is noisy

Many sounds of an ice machine are different than your household refrigerator. Check the following:

Do you hear water being circulated in the ice machine? This is a normal sound as water is added once every ice making cycle.

Is there a "whoosing" sound? Make sure water is getting to the ice machine. Also check to make sure the drain plug is fully seated in the water reservoir.

Is there an ice slab caught between the evaporator plate and the grid cutter? First check to see if the ice machine is level. If the ice machine is level run a cleaning cycle.

WARNING

Electrocution Hazard

- Never attempt to repair or perform maintenance on the appliance until the main electrical power has been disconnected. Turning the appliance control "OFF" does not remove electrical power from the unit's wiring.
- Replace all parts and panels before operating.

Ice Production

Little or no ice production from the ice machine

Is the electronic control set to the "ICE" position? Check the control to be sure it is in the "ICE" position.

Is water getting to the ice machine? Make sure nothing is restricting the water supply such as a closed water valve or a blown fuse or tripped circuit breaker, or a kinked supply line, or low water pressure.

Has the ice machine just been started? A typical ice production cycle can take up to 1 ½ hours. Initial start up cycles can take longer. Check the ice machine after 24 hours for ice accumulation in the bin.

Is the reservoir drain plug in place? Check that the reservoir drain plug is properly seated.

Is the water distributor tube restricted? Run a cleaning cycle to clean the ice machine. Also check any filters to make sure they are not restricted.

Is the condenser fan air flow restricted? Make sure the grille in the front of the ice machine is open for proper air circulation.

Is the room and/or water temperature to warm? Move the ice machine to an area where the ambient temperature is below 90°F (32°C) for built-in ice machines or below 100°F (38°C) for freestanding ice machines. The ice machine should not be placed next to a heat source such as an oven. Check the cold water connection.

Is there scale build up in the ice machine? If there is scale build up on the evaporator, the ice machine needs to be cleaned. See "Care & Cleaning".

WIRE DIAGRAM

ICE MACHINES BUILT BEFORE AUGUST 2025

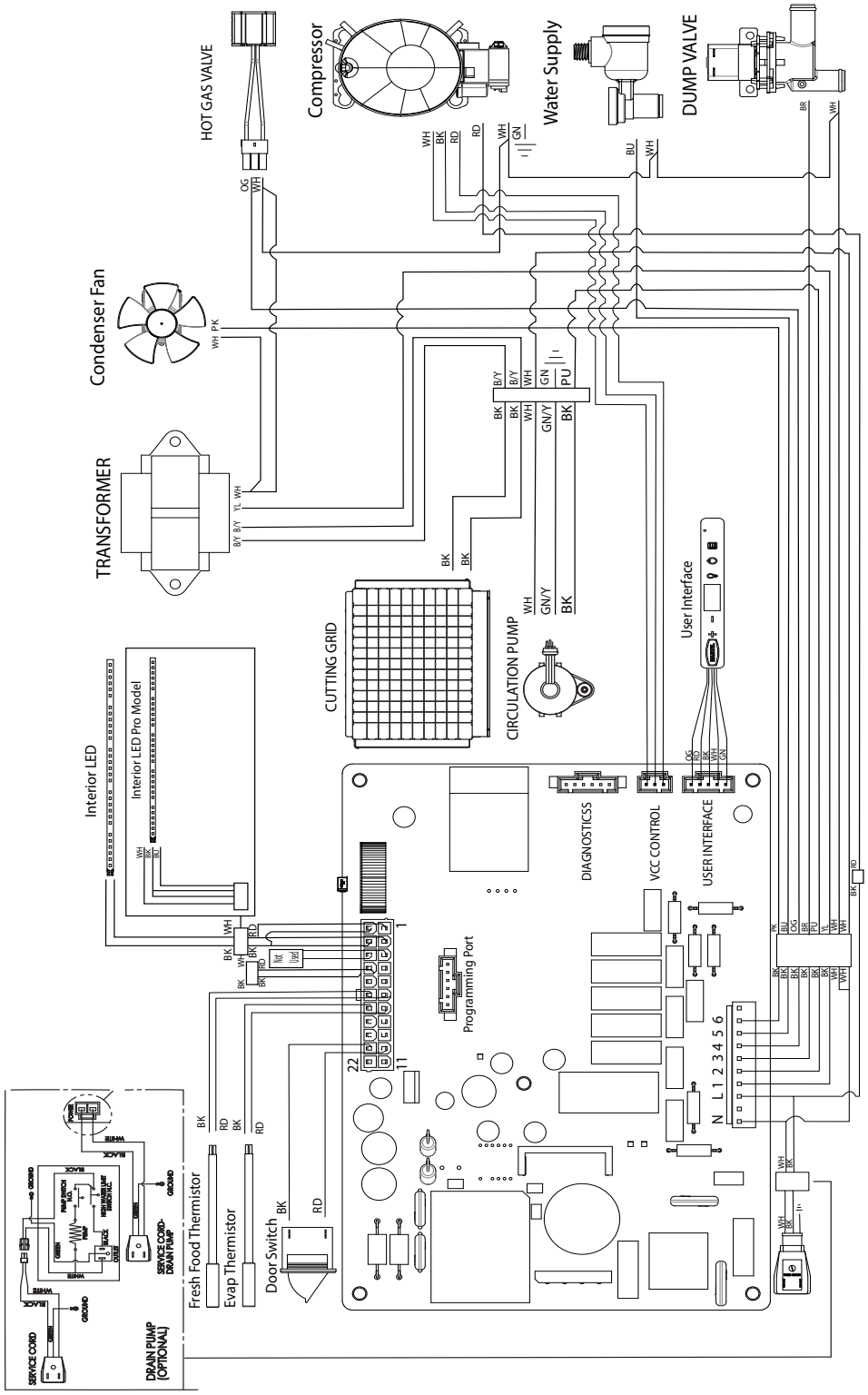

WIRE DIAGRAM

ICE MACHINES BUILT AFTER AUGUST 2025

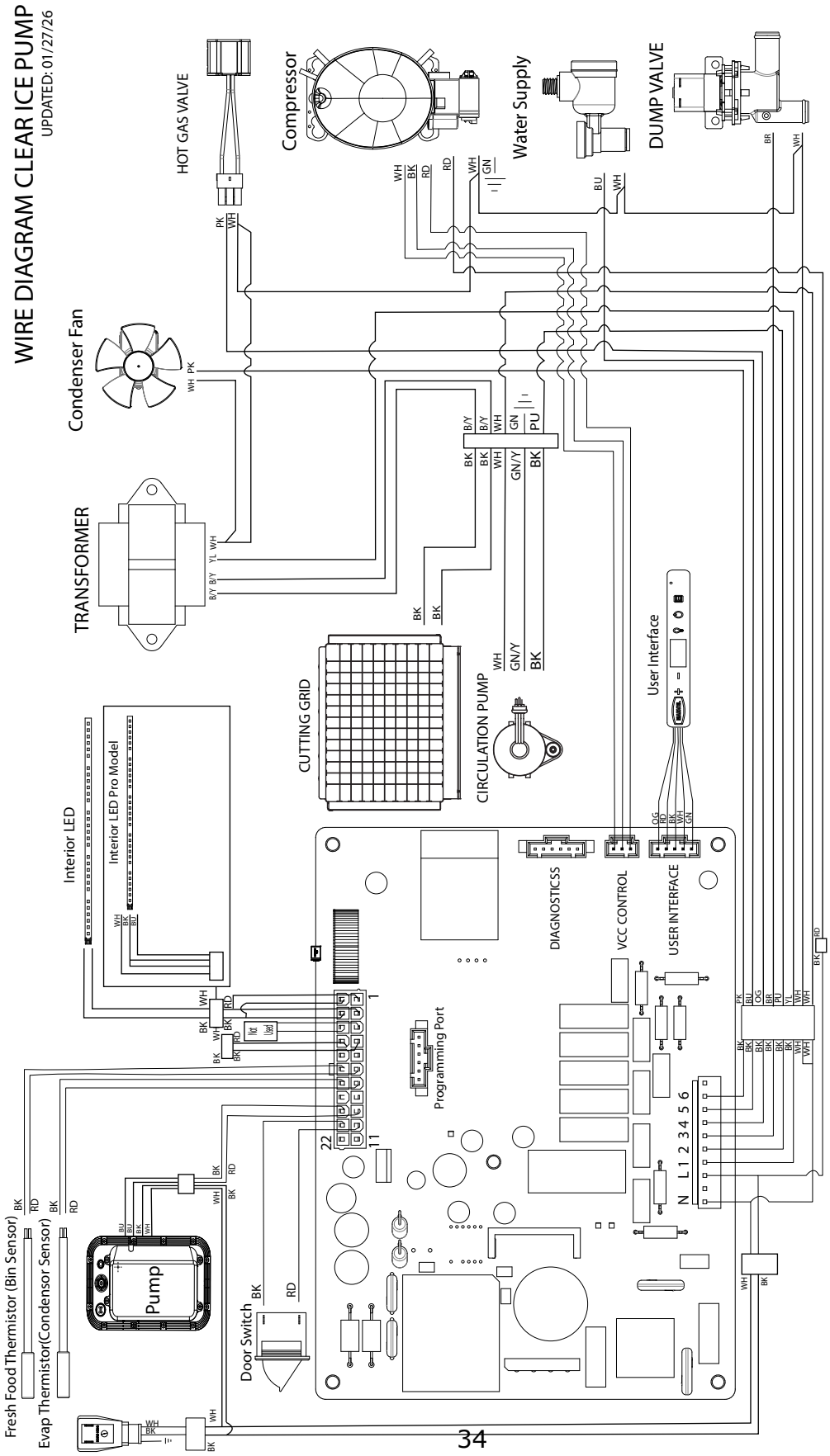

ICE MACHINES BUILT AFTER AUGUST 2025

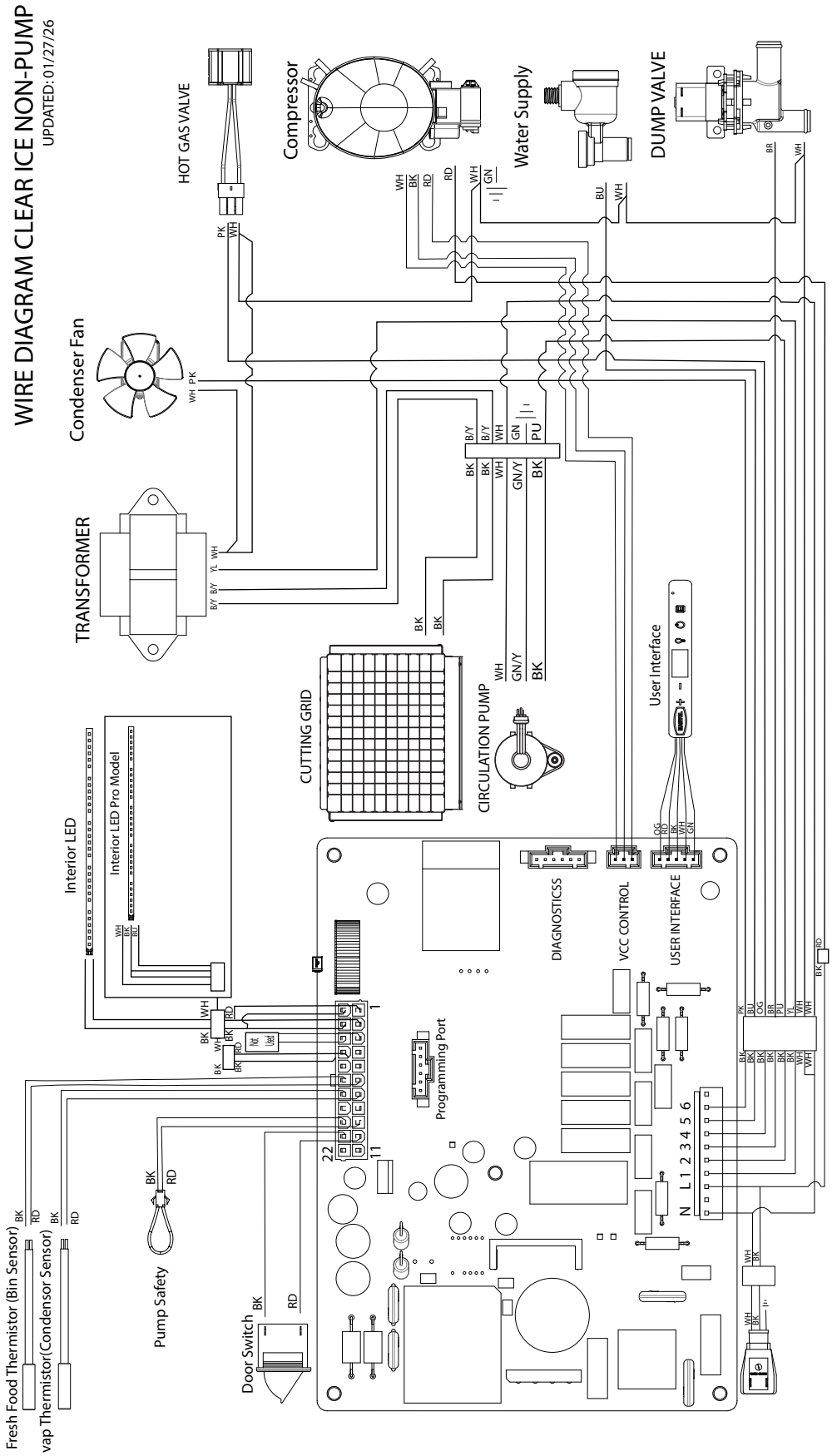

PRODUCT LIABILITY

Field service technicians are authorized to make an initial assessment in the event of reported damages. If there are any questions about the process involved, the technician should call Marvel for further explanation.

While inspecting for defects or installation issues, photos should be taken to document any damages or issues found.

During the assessment, if the service technician is able to find the source of the damage and it can be resolved by replacement of a part, the servicer is authorized to replace the part in question. The part that caused the damage must be returned to Marvel in its entirety. The part must be clearly labeled with the serial number of the unit it was removed from, the date, and the servicer who removed the part.

If the service technician determines the damage is the result of installation issues (water connection/drain, etc.), the consumer would be notified and the issues shall be resolved at the direction of the consumer.

If damage is evident and the service technician is unable to find the source, Marvel must be contacted at 616.754.5601 for further direction.

1260 E. Van Deinse St. • Greenville, MI 48838
T: 616.754.5601
Website: www.marvelrefrigeration.com

The original refrigeration experts since 1892.

Service Parts List

marvelrefrigeration.com
616-754-5601

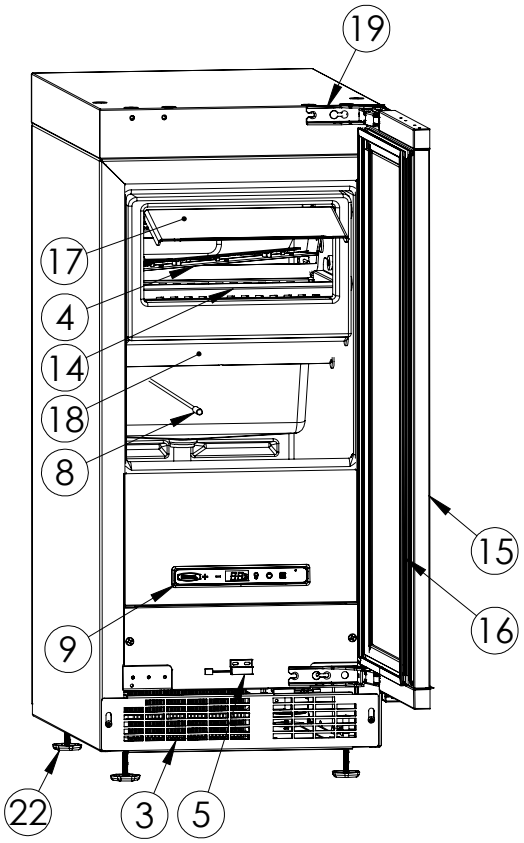

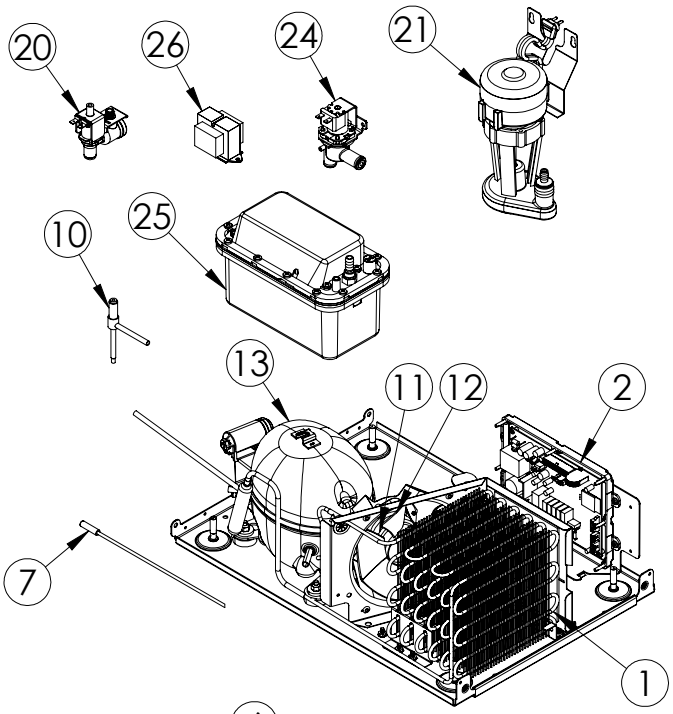

MPCP415-IS81A		
ITEM	DESCRIPTION	MARVEL P/N
1	CONDENSER ASSEMBLY	S41013912
2	MAIN CONTROL BOARD KIT	90-54002-82
3	GRILLE BLK	90-54056-01
4	VYV LED LIGHT STRIP	90-54085-00
5	REED SWITCH	S66010
6	EVAPORATOR ASSEMBLY	42249569
7	CONDENSER SENSOR	90-54013-00
8	THERMISTOR ASSEMBLY	S68092
9	UI DISPLAY KIT	S68167-01
10	HOT GAS VALVE	42249497
11	CONDENSER FAN MOTOR	42248161
12	CONDENSER FAN BLADE	42248160
13	COMPRESSOR ASSEMBLY	90-54006-00
14	GRID CUTTER	42249542
15	DOOR ASSEMBLY	90-54054-00
16	DOOR GASKET	S31580-052
17	FASCIA AND FASCIA DOOR	90-54004-00
18	DEFLECTOR	90-54000-00
19	HINGE PKG	90-54040-00
20	WATER SUPPLY VALVE	S41014084
21	CIRCULATION PUMP	42242980
22	LEG LEVELERS (4)	42243808
23	POWER CORD	S41050606
24	DRAIN VALVE	42249456
25	GRAVITY DRAIN TO DRAIN PUMP KIT	42249509
26	TRANSFORMER	S41050610
27	INVERTER COMPRESSOR *	90-54063-00
28	CLEAR ICE MACHINE CLEANER *	S41013789
29	BRAIDED DRAIN HOSE	90-54129-00

* NOT PICTURED

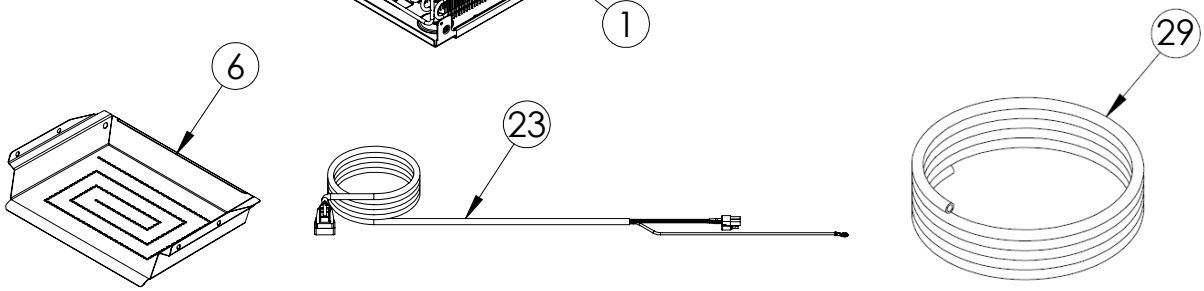

ORDERING REPLACEMENT PARTS

Parts may be ordered online at partsformarvel.com.

Or contact:

www.marvelrefrigeration.com (Servicers choose "Login" for service account).
Phone Number: (616) 754-5601

NOTE

Use only genuine Marvel replacement parts. The use of non-Marvel parts can reduce performance, damage the unit, and void the warranty.

Warranty parts will be shipped at no charge after Marvel confirms warranty status. Please provide the model, serial number, part number and part description. Some parts will require color or voltage information.

Marvel requires the return of original parts, we will inform you when the parts order is taken. This requirement will be noted on your packing list. A prepaid shipping label will be emailed to you. Please enclose a copy of the parts packing list and be sure the model and serial numbers are legible on the paperwork. Tag the part with the reported defect.

Customers and non-authorized servicers may order non-warranty parts at www.partsformarvel.com. Authorized servicers with a servicer login may order non-warranty parts at www.marvelrefrigeration.com.

R600A Specifications & Handling

WARNING

Flammability warnings for a pure-iso-butane refrigerant.

Gloves and Eye Protection must be used.

R-600a is considered non-toxic, but is flammable when mixed with air.

Keep a dry powder type fire extinguisher in the work area.

R-600a is heavier than air, do not allow any leakage/migration to low areas such as basements and stairs.

Never use a torch on a fully charged refrigeration system.

Never substitute Marvel OEM replacement parts or methods of construction.

R-600a must be stored and transported in approved containers.

WARNING

Only skilled and well trained service technicians permitted to service R-600a equipped products.

All tools and equipment must be approved for use with R-600a refrigerant.

Local, state and federal laws, standards must be observed along with proper certification and licensing.

Ventilation is required during servicing.

No conversions to R-600a from any other refrigerants. OEM R-600a equipped unit only.

Service area must be free of ignition sources.

No smoking is allowed in the service area.

All replacement electrical components must be OEM and installed properly (sealed and covered).

If the evaporator is cold prior to service, it must be thawed prior to service.

When using a vacuum pump, start pump before opening refrigeration system.

Vacuum pump and recovery equipment should be at least 10 feet from the work area.

It is recommended that a simple LPG gas detector is on site during service.

Ensure that all R-600a is removed from the system prior to brazing any part of the sealed system.

Only a clean, dry leak free system should be charged with R-600a.

R-600A Specifications/Labeling

R-600a equipped products are labeled (both the unit and the compressor).

R-600a is colorless and odorless.

R-600a is considered non-toxic, but is flammable when mixed with air.

Do not remove or alter any R-600a labeling on the product.

Use only a refrigerant grade R-600a from a properly labeled container.

Recovering/Reclaiming R-600A

(R-600a has been exempted from recovery/reclaiming requirements by the US EPA)

Recovery/Reclaiming equipment must be approved for use with R-600a.

Ensure the evaporator is at room temperature prior to recovery/reclaiming R-600a.

Use a common piercing pliers or piercing valve to remove R-600a from the compressor process tube. (Note: Piercing devices must not be left on the system and must be replaced with a Schrader type valve).

Evacuate/reclaim via the piecing pliers to ensure the system is empty of R-600a before any system work is performed.

The recovery cylinder must be evacuated (no air inside) prior to accepting R-600a.

The recovery cylinder must not be filled more than 45% safe fill level and refrigerants must not be mixed.

The recovery cylinder must be clearly marked with R600a and Flammable Warning labels.

Ensure proper ventilation during recovery/reclaiming of R600a.

Start vacuum pump/recovery pump prior to piercing the compressor process tube.

Follow recovery/reclaim OEM instructions for the specific equipment used.

System Repair

Ensure no residual R-600a refrigerant is left within the system prior to repair (simple venting is not sufficient).

Evacuate and charge with dry nitrogen for leak checks.

Repair leaks or replace system parts as required.

When re-brazing, the system must be purged with dry nitrogen and at least one access point open to the atmosphere.

When re-brazing, proper ventilation is required along with constant monitoring for the presence of R600a refrigerant.

The filter dryer must be replaced any time the sealed system is serviced.

No system should be open to the atmosphere for longer than 15 minutes to avoid moisture migration into the system components.

Leak Detection

After removal of the R-600a, the unit can be charged with dry nitrogen or helium.

Electronic leak detection or soap solution can be used tocheck for nitrogen/helium leaks.

Never use a halide torch or lighted match to check the system for leaks at any time.

The high side of the refrigeration system (compressor discharge to outlet of drier) must be leak tested with the compressor running.

The low side of the refrigeration system (evaporator, compressor and suction line) must be leak tested with the compressor off (equalized pressure).

Recharging

No air is ever to be allowed inside the refrigeration system (R-600a refrigerant or dry nitrogen only).

Never use a torch on a fully charged refrigeration system.

Install a Schrader Type access port on the compressor process stub.

Evacuate the system to 100 microns prior to charging.

Weigh in the R-600a charge using a refrigerant scale (run compressor an extra two minutes to clear the charging hoses).

Seal the Schrader Type access port, a proper cap and seal must be used to close the system.

Summary

Safely handling R-600a requires proper procedures and training.

R-600a approved service tools must be used.

R-600a labeling must not be removed or altered.

Proper ventilation during service is required.

Never apply a torch to a charged R-600a refrigeration system.

Use OEM replacement service parts and do not alter the construction of the unit.

Refrigeration System Diagnosis Guide

System Condition	Suction Pressure	Suction Line	Compressor Discharge	Condenser	Capillary Tube	Evaporator	Wattage
Normal	Normal	Slightly below room temperature	Very hot	Very hot	Warm	Cold	Normal
Overcharge	Higher than normal	Very cold may frost heavily	Slightly warm to hot	Hot to warm	Cool	Cold	Higher than normal
Undercharge	Lower than normal	Warm - near room temperature	Hot	Warm	Warm	Extremely cold near inlet - Outlet below room temperature	Lower than normal
Partial Restriction	Somewhat lower than normal vacuum	Warm - near room temperature	Very hot	Top passes warm - Lower passes cool (near room temperature) due to liquid	Room temperature (cool) or colder	Extremely cold near inlet - Outlet below room temperature backing up	Lower than normal
Complete Restriction	In deep vacuum	Room temperature (cool)	Room temperature (cool)	Room temperature (cool)	Room temperature (cool)	No refrigeration	Lower than normal
No Gas	0 PSIG to 25” R	Room temperature (cool)	Cool to hot	Room temperature (cool)	Room temperature (cool)	No refrigeration	Lower than normal

COMPRESSOR SPECIFICATIONS

⚠ WARNING

Electrocution can cause death or serious injury. Burns from hot or cold surfaces can cause serious injury. Take precautions when servicing this unit.

Disconnect the power source.

Do not stand in standing water when working around electrical appliances.

Make sure the surfaces you touch are not hot or frozen.

Do not touch a bare circuit board unless you are wearing an anti-static wrist strap that is grounded to an electrical ground or grounded water pipe.

Handle circuit boards carefully and avoid touching components.

	FMXA9C
Refrigerant	R600A
Voltage	115 VAC
Frequency	60 Hz
Start Winding	5 Ohm at 77°F
Run Winding	7 Ohm at 77°F
Run to Start	12 Ohm at 77°F
LRA	8.0 A
FLA	2.18 A
Starting Device	Run Cap 12VF 250V P2

*All resistance readings are ± 10%.

CONTROL OPERATION-SERVICE

UI Button Layout

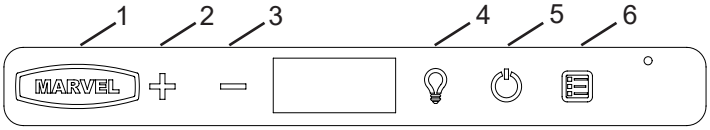

1. Hidden Button
   -Access Service Menu
   -No LED directly above. All LEDs turn on with button

2. Plus Button
   -Increases temperature
   -Navigates through service menu

3. Minus Button
   -Decreases temperature
   -Navigates through service menu

4. Light Button
   -Activates light for 3 hours on select models
   -Used to select items in service menu

5. Power Button
   -Turns unit off/on

6. Clean Button
   -Toggles temperature between zones in Dual-Zone models.
   -Hold down (-) button and press clean button to toggle temperature between zones in Dual-Zone models.
   -White light display = upper zone
   -Blue light display = lower zone

Control Function Guide

Function	Command	Display/Options
ON/OFF	Press ⏻ and release	Unit will immediately turn ON or OFF
Sabbath Mode	See "Sabbath Mode" section	

Showroom Mode

This mode is designed to show units in a display environment. When in this mode the only functions will be the control and cabinet lights. The compressor, fans, etc. will not operate. To enter/exit this mode hold the light key and the power key for 5 seconds. The display will flash once and beep and the degree symbol will begin to flash. When the degree symbol is flashing the unit will allow the use of the control for demonstrations. The unit can be left in this mode indefinitely.

Service Mode

This mode has options available for service diagnostics. To enter the mode hold the hidden key for 10 seconds. The display will show "01." When in this mode use the up and down arrows to select the desired option. The LIGHT key is the ENTER key and will initiate the function. If changing a setting, you must press the LIGHT key again to retain the changed setting. To exit the service mode scroll to option "00" and press the LIGHT key. After Ave minutes of not touching any keys the mode will also exit automatically.

SERVICE MODE
(For adjustments, see Service Mode Guide)

0. Exit
1. Thermistor 1 temperature not including offsets.
2. Thermistor 2 temperature not including offsets.
3. Thermistor 3 temperature not including offsets.
4. Thermistor 4 temperature not including offsets.
5. Thermistor 1 offset. (+/- 10)
6. Thermistor 2 offset. (+/- 10)
7. Thermistor 3 offset. (+/- 10)
8. Thermistor 4 offset. (+/- 10)
9. Thermistor 2 set point
10. Thermistor 3 set point.
11. Thermistor 4 set point.
12. Defrost Interval (0 to 99 hr)
13. Defrost duration (0 to 99 min)
14. Error Log (See Appendix)
15. Clear error log (hold light key until cleared)
16. Thermistor 1 differential (+5)
17. Thermistor 3 differential (+5)
18. Evaporator fan on delay (0 to 99 sec)
19. Evaporator fan off delay (0 to 99 sec)
20. Individual component toggle
    - Option #0 – Exit
    - Option #1 – Relay 1
    - Option #2 – Relay 2
    - Option #3 – Relay 3
    - Option #4 – Relay 4
    - Option #5 – Relay 5
    - Option #6 – Relay 6
    - Option #7 – DC Output 1
    - Option #8 – DC Output 2
    - Option #9 – DC Output 3
    - Option #10 – DC Output 4
    - Option #11 – DC Output 5
    - Option #12 – Serial output (Compressor)
21. Model number
22. Light All Segments
23. Activate Defrost/Harvest- press and hold for 3 seconds to activate defrost/harvest
24. Defaults- press and hold for 3 seconds to restore all values to factory defaults.
25. Main Software (Display only)
26. Live Log Period (frequency that data is output to diagnostics port)
27. Factory test mode (0=Off, 1=On)
28. Compressor RPM
29. Freeze time adjust (Model 54 only)
30. Harvest time adjust (Model 54 only)
31. Low temp alarm limit (Model 55 only)
32. High temp alarm limit (Model 55 only)

APPENDIX

SERVICE MODE GUIDE

1. **THERMISTOR 1**
   This shows the pure thermistor reading with no offsets taken into account.
2. **THERMISTOR 2**
   This shows the pure thermistor reading with no offsets taken into account.
3. Does not apply to this model.
4. Does not apply to this model.
5. **THERMISTOR 1 OFFSET**
   (DO NOT MAKE AN ADJUSTMENT TO THIS WITHOUT CONTACTING TECH LINE: (616) 754-5601)
   This calibration is only to be used if actual temperature at thermistor #1 is off from set point.
   By adjusting the offset higher we can force the unit to drive the temperature down below the set point. (example: adjusting from 0 to +2 will drop the unit temperature 2 degrees)
6. **THERMISTOR 2 OFFSET**
   (DO NOT MAKE AN ADJUSTMENT TO THIS WITHOUT CONTACTING TECH LINE: (616) 754-5601)
7. Does not apply to this model.
8. Does not apply to this model.
9. Does not apply to this model.
   This shows the thermistor reading with offsets taken into account.
10. Does not apply to this model.
11. Does not apply to this model.
12. Does not apply to this model.
13. Does not apply to this model.
14. **VIEW ERROR LOG**
    A list of errors in the order they occurred will scroll on the display. All errors are logged in memory. Only door error is displayed on the display and has an audible signal.
    E0: Door 1 open.
    E1: Thermistor 1 open.
    E2: Thermistor 2 open.
    E3: Does not apply to this model.
    E4: Does not apply to this model.
    E5: Thermistor 1 shorted.
    E6: Thermistor 2 shorted.
    E7: Does not apply to this model.
    E8: Does not apply to this model.
    E9: Door open.
    E10: Door 2 open.

E11 - E13 Do not apply to this model.

P1: Pump Circuit open (Only if unit has drain pump.)

15: **CLEAR ERROR LOG**

To clear errors, press and hold (5 seconds) when CLR is flashing.

16: **THERMISTOR - 1 DIFFERENTIAL**

This number should not be adjusted.

17. Does not apply to this model.

18. **THIS NUMBER SHOULD NOT BE ADJUSTED**

19. **THIS NUMBER SHOULD NOT BE ADJUSTED**

20. **INDIVIDUAL COMPONENT TOGGLE**

SEE RELAY / OUTPUT CHART

21. **MODEL NUMBER INDICATOR**

Displays the two-digit model number of the specific unit. See Model list table.

22. **LIGHT ALL LED SEGMENTS**

This will illuminate all the LEDs on the display to ensure they work properly

23. **ACTIVATE DEFROST /HARVEST**

-Press and hold for 3 seconds to activate

24. **FACTORY DEFAULTS**

-Press and hold for 3 seconds to restore all values to factory defaults

25. **MAIN SOFTWARE**

26. Does not apply to this model

27. **FACTORY TEST MODEL - DO NOT USE**

28. **COMPRESSOR RPM**

29. - 32. Do not apply to this model.

MODEL LIST

Model #	
54	ALL CLEAR ICE MODELS 2020 AND NEWER
82	BRIGHT SHIELD MODELS
84	CRAFT ICE MODELS

PROGRAMMING THE UNIT TO CORRECT MODEL NUMBER

1. Disconnect the unit from power source.
2. Push and hold the Marvel button. MARVEL
3. While still holding the Marvel button, plug the unit into the appropriate power source.
4. When the flashing digits appear (3-5 seconds), use the plus and minus buttons to set to appropriate number.

   + or −
5. Press the light bulb button once.
6. The display will blink, and then will appear as the programmed display.

Display #	Relay / Output
Option #0	Exit
Option #1	Relay 1
Option #2	Relay 2
Option #3	Relay 3
Option #4	Relay 4
Option #5	Relay 5
Option #6	Relay 6
Option #7	DC Output 1
Option #8	DC Output 2
Option #9	DC Output 3
Option #10	DC Output 4
Option #11	DC Output 5
Option #12	Serial output (Compressor)

Relay / Output Chart

Relay 1	Compressor
Relay 2	-
Relay 3	Circulation Pump
Relay 4	Water Inlet
Relay 5	Hot Gas Valve
Relay 6	Cond Fan
DC1	Light 1
DC2	Light 2
DC3	-
DC4	-
DC5	Cond Fan

Thermistors

Thermistors are used for various temperature readings. Thermistors provide reliable temperature readings using a resistance which varies based on surrounding temperatures. If a faulty thermistor is suspected it may be tested using an accurate ohmmeter.

Both thermistors in the unit are identical. If a thermistor is suspected of being defective, the resistance can be verified. Place the thermistor in an ice water bath, the resistance should read 16.lk Ohms +/-5% on your meter.

Thermistor connections must be kept clean. A thermistor connection that has become corroded can cause resistance values from the thermistor to change as they pass through a dirty connection to the board.

It is for that reason that we apply dielectric grease to all of our thermistor connections. Dielectric grease will help to keep thermistor connections clean and dry.

If you change a thermistor in the unit please re-apply dielectric grease to the connection. If you encounter a dirty thermistor connection, you should replace the thermistor and the thermistor harness.

Thermistor error information can be found in the Control Operations - Service section.

This unit has two thermistor.

Thermistor one (Ice Bin):
Located along the left hand side wall. It is used to maintain the ice level in the bin.

Thermistor two (Condenser):
Located on the condenser. It is used for defrost. Production Time Composition (PTC): Higher ambient and/or restricted airflow can have negative effect on ice production. To compensate the production cycle will increase 40 seconds for every 1ºF the condenser temperature (T2) is above 80°F.

Thermistor Failure

Zone Thermistor

If the condenser (T2) stop working an error (E2) will be displayed in service menu. If the bin thermistor (T1) fails the unit will stop working and E1 will be displayed in service menu. The unit will not operate if either thermistor fails.

Evaporator Thermistor

If the evaporator thermistor fails, the unit will rely on a preset defrost timer during defrost cycles. The unit will otherwise operate normally. Refer to defrost section.

Thermistor Resistance Data

Temp (F)	Temp (C)	Nominal Resistance (5K OHMS)*
5	-15	36503
14	-10	27681
23	-5	21166
32	0	16330
41	5	12696
50	10	9951
59	15	7855
68	20	6246
77	25	5000
86	30	4029
95	35	3266
104	40	2665

Temperature	Nominal Resistance (10 OHMS)
-40ºC (-40ºF)	239.700
-35ºC (-31ºF)	179.200
-30ºC (-22ºF)	135.200
-25ºC (-13ºF)	102.900
-20ºC (-4ºF)	78.910
-15ºC (5ºF)	61.020
-10ºC (14ºF)	47.540
-5ºC (23ºF)	37.310
0ºC (32ºF)	29.490
5ºC (41ºF)	23.460
10ºC (50ºF)	18.780
15ºC (59ºF)	15.130
20ºC (68ºF)	12.260
25ºC (77ºF)	10.0
30ºC (86ºF)	8.194
35ºC (95ºF)	6.752
40ºC (104ºF)	5.592
45ºC (113ºF)	4.655
50ºC (122ºF)	3.893
55ºC (131ºF)	3.271
60ºC (140ºF)	2.760
65ºC (149ºF)	2.339
70ºC (158ºF)	1.990
75ºC (167ºF)	1.700
80ºC (176ºF)	1.458

Marvel Refrigeration (Marvel) Limited Warranty

ONE YEAR LIMITED PARTS & LABOR WARRANTY

For one year from the date of original purchase, this warranty covers all parts and labor to repair or replace any part of the product that proves to be defective in materials or workmanship. For products installed and used for normal residential use, material cosmetic defects are included in this warranty, with coverage limited to 60 days from the date of original purchase. All service provided by Marvel under the above warranty must be performed by a Marvel factory authorized servicer, unless otherwise specified by Marvel. Service provided during normal business hours.

TWO YEAR LIMITED PARTS & LABOR WARRANTY (MARVEL PROFESSIONAL PRODUCTS)

For two years from the date of original purchase, this warranty covers all parts and labor to repair or replace any part of the product that proves to be defective in materials or workmanship. For products installed and used for normal residential use, material cosmetic defects are included in this warranty, with coverage limited to 60 days from the date of original purchase. All service provided by Marvel under the above warranty must be performed by a Marvel factory authorized servicer, unless otherwise specified by Marvel. Service provided during normal business hours.

AVAILABLE THIRD YEAR LIMITED WARRANTY (MARVEL PROFESSIONAL PRODUCTS)

For designated Marvel Professional product, Marvel offers a one year extension of the two year warranty coverage from the date of purchase, free of charge. To take advantage of this third year warranty, you must register your product with Marvel within 60 days from the date of purchase at marvelrefrigeration.com and provide proof of purchase.

LIMITED FIVE YEAR SEALED SYSTEM WARRANTY

For five years from the date of original purchase, Marvel will repair or replace the following parts, labor not included, that prove to be defective in materials or workmanship: compressor, condenser, evaporator, drier, and all connecting tubing. All service provided by Marvel under the above warranty must be performed by a Marvel factory authorized servicer, unless otherwise specified by Marvel. Service provided during normal business hours.

WARRANTY TERMS

These warranties apply only to products installed in any one of the fifty states of the United States, the District of Columbia, or the ten provinces of Canada. The warranties do not cover any parts or labor to correct any defect caused by negligence, accident or improper use, maintenance, instal-lation, service, repair, acts of God, fire, flood or other natural disasters. The product must be installed, operated, and maintained in accordance with the Marvel User Guide.

The remedies described above for each warranty are the only ones that Marvel will provide, either under these warranties or under any warranty arising by operation of law. Marvel will not be responsible for any consequential or incidental damages arising from the breach of these warranties or any other warranty, whether express, implied, or statutory. Some states do not allow the exclusion or limitation of incidental or consequential damages, so the above limitation or exclusion may not apply to you. These warranties give you specific legal rights, and you may also have other rights which vary from state to state.

Any warranty that may be implied in connection with your purchase or use of the product, including any warranty of merchantability or any warranty fit for a particular purpose is limited to the duration of these warranties, and only extends to five years in duration for the parts described in the section related to the five year limited warranty above. Some states do not allow limitations on how long an implied warranty lasts, so the above limitations may not apply to you.

- The warranties only apply to the original purchaser and are non-transferable.
- These warranties cover products installed and used for normal residential use only.
- The warranties apply to units operated outside only if designed for outdoor use by model and serial number.
- Replacement water filters, light bulbs, and other consumable parts are not covered by these warranties.
- The start of Marvel's obligation is limited to four years after the shipment date from Marvel.
- In-home instruction on how to use your product is not covered by these warranties.
- Food, beverage, and medicine loss are not covered by these warranties.
- If the product is located in an area where Marvel factory authorized service is not available, you may be responsible for a trip charge or you may be required to bring the product to a Marvel factory authorized service location at your own cost and expense.
- Units purchased after use as floor displays, and/or certified reconditioned units, are covered by the limited one year warranty only and no coverage is provided for cosmetic defects.
- Signal issues related to Wi-Fi connectivity are not covered by these warranties.

For parts and service assistance, or to find Marvel factory authorized service near you, contact Marvel Refrigeration:
marvelrefrigeration.com • techsupport@marvelrefrigeration.com • 616.754.5601
1260 E. Van Deinse St. Greenville, MI 48838

www.marvelrefrigeration.com

Marvel Refrigeration
1260 E. Van Deinse St.
Greenville MI 48838

616.754.5601

All specifications and product designs subject to change without notice. Such revisions do not entitle the buyer to corresponding changes, improvements, additions, replacements or compensation for previously purchased products.