METAL LINER SLOPED SIDES *Wall Model*

Sloped Sides 14" Tall

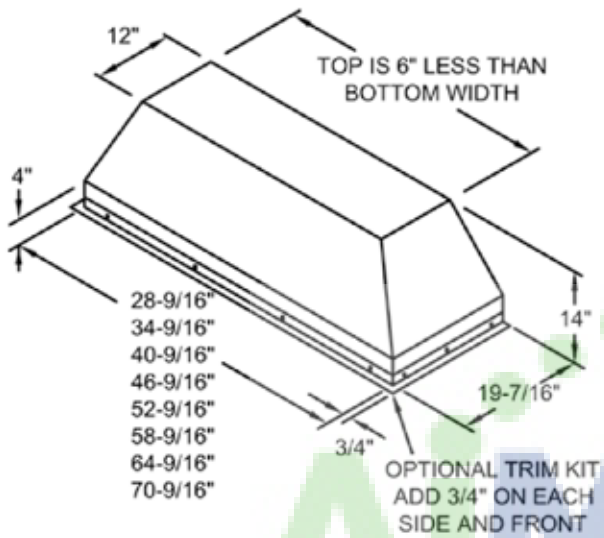

- SEAMED CONSTRUCTION
- 3-SPEED CONTROL
- 50 WATT BULBS AMBIENT & BRILLIANT-BULBS INCLUDED
- HIGH HEAT SENSOR
- BAFFLE FILTER-STAINLESS STEEL
- ENCLOSED LINERS-STAINLESS STEEL
- 20 GAUGE MATERIAL
- NON-MIRRORED, FINISHED EDGES
- TOP DISCHARGE ONLY

* **$FREE!** THE MLSS-28-SS-6 UNIT INCLUDES THE CFM600 IN-HOOD FAN AND 8" SQUARE-TO-ROUND TRANSITION WITH BACKDRAFT DAMPER

MODEL	SIZE	MATERIAL
* MLSS-28-SS-6	28 3/8"	BRUSHED SS
MLSS-34-SS	34 3/8"	BRUSHED SS
MLSS-40-SS	40 3/8"	BRUSHED SS
MLSS-46-SS	46 3/8"	BRUSHED SS
MLSS-52-SS	52 3/8"	BRUSHED SS
MLSS-58-SS	58 3/8"	BRUSHED SS
MLSS-64-SS	64 3/8"	BRUSHED SS
MLSS-70-SS	70 3/8"	BRUSHED SS

ALL METAL LINERS COME WITH "E-Z" INSTALL MOUNTING BRACKETS!

MLSS - 28"		
CFM 300 IN-HOOD FAN	6" TRANSITION	(FAN INCLUDED)
CFM 600 IN-HOOD FAN	8" TRANSITION	(FAN INCLUDED)
CFMR 600 REMOTE FAN	8" TRANSITION	(FAN PURCHASED SEPARATELY)

MLSS - 34" 40" 46" 52" 58" 64" 70"		
CFM 300 IN-HOOD FAN	6" TRANSITIONS	(FAN PURCHASED SEPARATELY)
CFM 600 IN-HOOD FAN	8" TRANSITION	(FAN PURCHASED SEPARATELY)
CFM 1200 IN-HOOD FAN	10" TRANSITION	(FAN PURCHASED SEPARATELY)
CFMR 600 REMOTE FAN	8" TRANSITION	(FAN PURCHASED SEPARATELY)
CFMR 1000 REMOTE FAN	10" TRANSITION	(FAN PURCHASED SEPARATELY)
CFMR 1400 REMOTE FAN	10" TRANSITION	FAN PURCHASED SEPARATELY)
ALL TRANSITIONS ARE SQUARE-TO-ROUND AND INCLUDE BACKDRAFT DAMPERS AT NO ADDITIONAL CHARGE.		

AJMadison
Your Appliance Authority™
800-570-3355