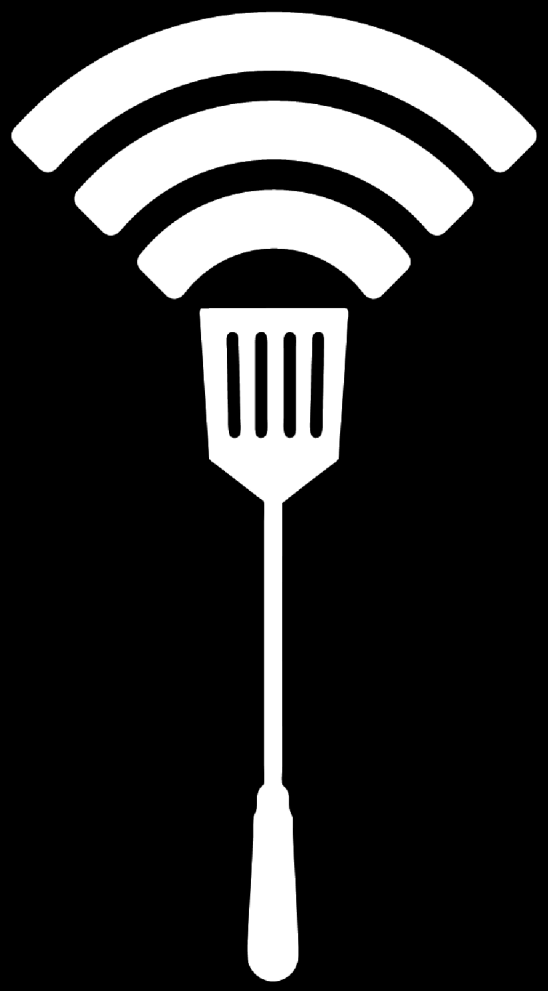

LYNX®

SONOMA SMOKER USER MANUAL

WARNINGS

WARNING

READ THIS MANUAL CAREFULLY and completely before using your smoker to reduce the risk of:

1. Fire
2. Burn hazard, personal injury or property damage
3. Ruined steaks or other unpleasant cooking experiences
4. Unapproved installation or servicing.

THIS PRODUCT IS DESIGNED FOR OUTDOOR USE ONLY. Improper installation, adjustment, alteration, service or maintenance can cause property damage, injury or death.

Read this manual thoroughly before installation, use, or servicing of this product.

DANGER

IF YOU SMELL GAS:

1. Shut off all gas supply lines to the smoker.
2. Extinguish any open flames.
3. Carefully open the lid. Remember, it may be extremely hot!
4. If odor continues, keep everyone away from the smoker and immediately call your gas supplier or your fire department.

AVERTISSMENT

S'IL Y A UNE ODEUR DE GAZ:

1. Coupez l'admission de gaz de l'appareil.
2. Éteindre toute flamme nue.
3. Ouvrir le couvercle. Rappelez-vous qu'il peut être extrêmement chaude.
4. Si l'odeur persiste, éloignez-vous de l'appareil et appelez immédiatement le fournisseur de gaz ou le service d'incendie.

WARNING

DO NOT store or use gasoline or other flammable vapors and liquids in the vicinity of this or any other appliance.

A liquid propane cylinder not connected for use shall not be stored in the vicinity of this or any other appliance.

AVERTISSMENT

Ne pas entreposer ni utiliser de l'essence ni d'autres vapeurs ou liquides inflammables dans le voisinage de l'appareil, ni de tout autre appareil.

Une bouteille de propane qui n'est pas raccordée en vue de son utilisation, ne doit pas être entreposée dans le voisinage de cet appareil ou de tout autre appareil.

WARNING! CALIFORNIA PROPOSITION 65

The burning of gas cooking fuel generates some by-products which are on the list of substances which are known by the State of California to cause cancer or reproductive harm.

California law requires businesses to warn customers of potential exposure to such substances. To minimize exposure to the substances, always operate this unit according to the use and care instructions found in this manual. Be certain to provide adequate ventilation when cooking.

QUICK START POWER CONNECTIVITY & WI-FI SET UP PROCESS*

STEP #1—REQUIREMENTS

- Smart device (phone or tablet)
- 110 volt GFIC outlet at the Smoker
- Proper gas supply
- Home network name (SSID) & password

  Name: _____

  Password: _____

- Sonoma Smoker by Lynx™ serial number/PIN*

  Serial number: _____

  PIN: _____

Located on the touch pad containment box

iPhone 5 or greater or iPad version 2.0 or greater

Android 4.4 or greater

STEP #2—SETUP YOUR SMOKER

- Locate the antenna in the white box inside the smoker and screw into the back of the Sonoma Smoker.
- Plug the power cable from the Sonoma Smoker into a 110v GFIC electrical outlet.

STEP #3—DOWNLOAD AND SETUP THE SONOMA SMOKER APP ON YOUR PHONE OR TABLET AND CREATE YOUR ACCOUNT

- Go to the App Store or Google Play and download "Sonoma Smoker by Lynx" and install
- Open the Sonoma Smoker App and click **Create Account** then enter your smoker serial number and PIN then click **Continue**.
- Enter your email address, password and your registration information and click
- **Create Account**. You will get a confirmation email.
- Open the confirmation email and follow instructions to activate your account.
- Now login to the Sonoma Smoker app by entering your email and password.

*For most current version of the Quick Start Guide, please refer to your app or our website at www.lynxgrills.com

QUICK START POWER CONNECTIVITY & WI-FI SET UP PROCESS*

STEP #4—SETUP Wi-Fi CONNECTIVITY

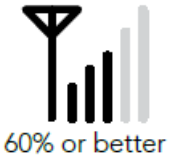

- On your Phone or Tablet, verify that you have at least 60% wireless signal at your Sonoma Smoker. If you cannot achieve at least 60% signal, we suggest you use a Wi-Fi extender, or booster. These are available at your local electronics store.

- On your Sonoma Smoker, press the power button and wait about 5 seconds for the smoker to display the Lynx Logo and timer buttons.

- Push the green or yellow Wi-Fi icon in the upper left of the control panel.
- Push the "confirm wireless reset" button
- On your phone or tablet, switch to your Wi-Fi settings and locate the wireless network called **Smoker xxxx** (xxxx is the last four digits of your serial number) and connect to it.

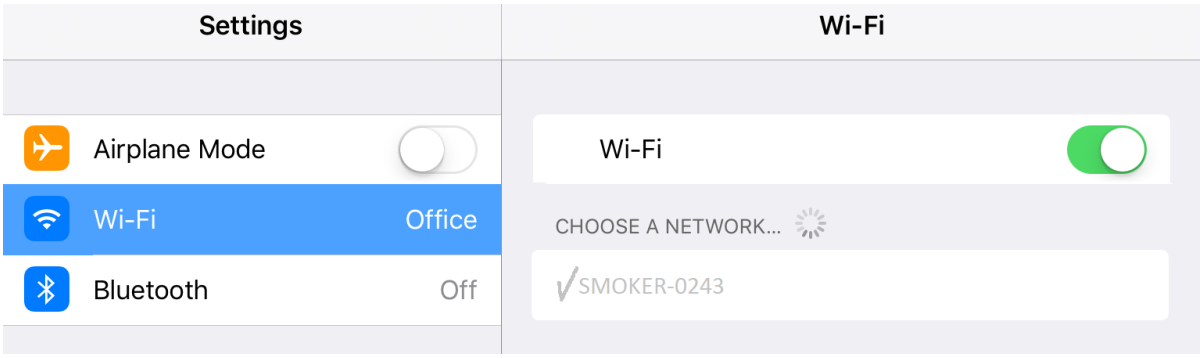

QUICK START POWER CONNECTIVITY & WI-FI SET UP PROCESS*

- Now go back to your Sonoma Smoker App and go to the **Resources** icon, then **My Smoker**, then **Smoker Wi-Fi setup**.
- Wait 10-20 seconds for the Wi-Fi setup menu

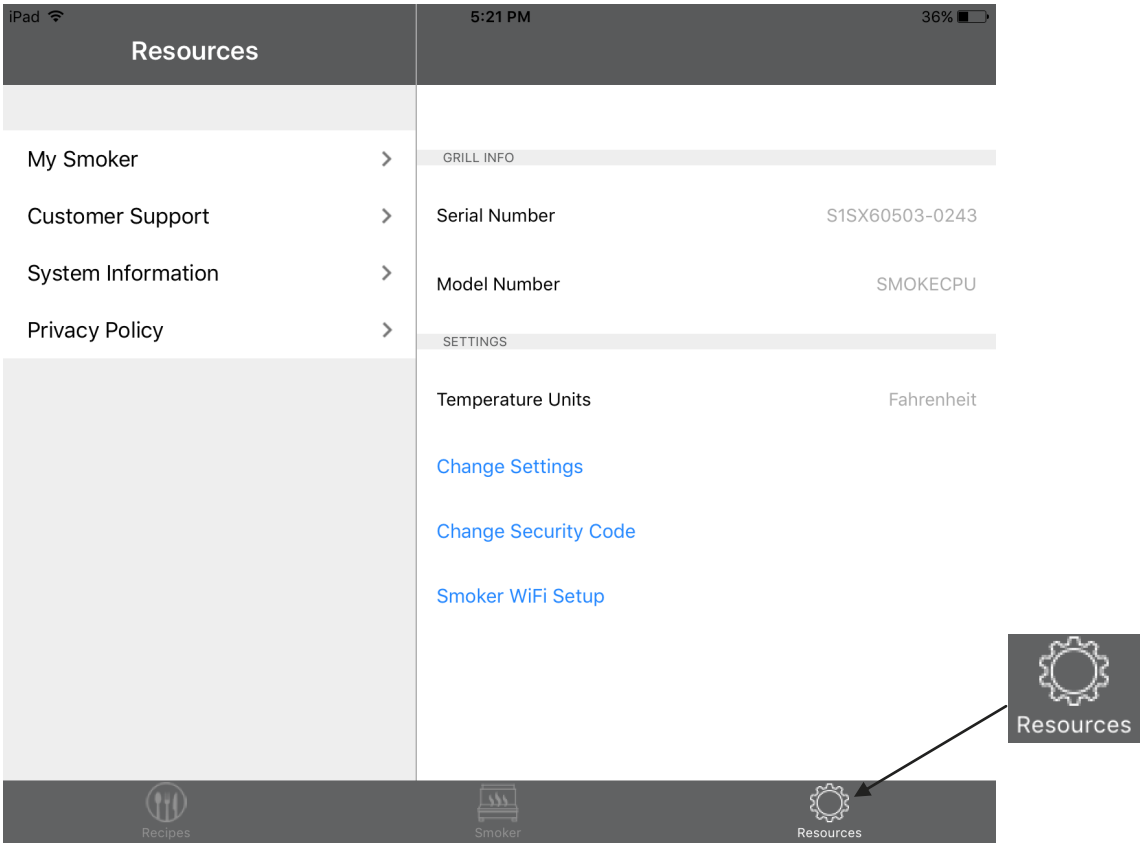

- Click on the SSID and enter the password for your home network (information in STEP #1—REQUIREMENTS) then select DONE. After 20-60 seconds, your Sonoma Smoker Wi-Fi icon will turn green to indicate that it is connected to the internet", and your wireless configuration is complete. Now just power the Sonoma Smoker off, then back on. After 5 seconds the Smoker will display the main control panel. On the Smoker app click on the Smoker icon and now your Sonoma Smoker is connected and ready to smoke.

STEP #5—START USING YOUR SMOKER

- To try out a recipe, go back to your Smoker App and go to the Recipe icon.

- Select a recipe from the recipe list and click Cook Now

to send the recipe to your Smoker. Follow the prompts and place food on the smoker, turn food over, remove food from smoker). Please note that it could take several minutes for your Smoker to warm up and give you the command to place food on smoker.

Need more help? Please refer to your detailed instruction manual or call our customer support team at 888-289-5969 and choose option #5.

WARNINGS

WARNING

- Never use dented, rusty or damaged propane cylinders. Never store additional or empty propane cylinders in the smoker cabinet or in the vicinity of this or any other appliance. Do not store propane cylinders indoors or on their sides.
- Children should never be left alone or unattended in an area where a smoker is located. Place your smoker well away from areas where children play. Do not store items that may interest children in or around the smoker, in the cart, or in the masonry enclosure.
- Never move the smoker when hot. When in use, portions of the smoker are hot enough to cause severe burns.
- Always maintain the required clearances from combustibles as detailed. The smoker is designed for outdoor use only. Never use in a garage, building, shed, breezeway, or other enclosed area. Do not use this smoker under any unprotected combustible construction.
- Gas smokers are not designed or certified for and are not to be installed in or on recreational vehicles, portable trailers, boats or any other moving installation.
- Always have an ABC Fire Extinguisher accessible — never attempt to extinguish a grease fire with water or other liquids.
- Storing your smoker: Store your smoker in a well-ventilated area. If stored indoors, detach and leave L.P. cylinder outdoors in a well-ventilated area away from heat and away from where children may tamper with it.
- Keep any electrical supply cord and the fuel supply hose away from any heated surfaces. Electrical cords should be placed away from walkways to avoid tripping hazard.
- Do not repair or replace any part of the smoker unless specifically recommended in this manual. Other service should be performed by a qualified technician.
- If the smoker is installed by a professional installer or technician, be sure that he/she shows you where your gas supply shut-off is located. All gas lines must have a shut-off that is readily and easily accessible. If you smell gas, check for gas leaks immediately. Check only with a soap and water solution. (See INDEX: “Leak Testing” for further details.) Never check for gas leaks with an open flame.
- Inspect the liquid propane gas supply hose prior to each use of the smoker. If there is evidence of excessive abrasion or wear, or if the hose is cut, it must be replaced before using the smoker.
- Never remove the grounding prong from the plug or use this product with an ungrounded, 2-prong adapter.
- Keep your smoker area clear and free of combustible materials, gasoline and other flammable vapors and liquids.
- Never block the flow of combustion and ventilation air.

THIS MANUAL MUST REMAIN WITH THE PRODUCT OWNER FOR FUTURE REFERENCE.

This product complies with ANSI standard Z21.89-2013/CSA 1.18 2013 latest edition, UL 62368-1 Issue:2014/12/01 Ed:2 and has been tested and approved by Intertek.

To obtain replacement parts or service contact:

Lynx Grills
7300 Flores Street
Downey, CA 90242
888-289-5969
www.lynxgrills.com

A MESSAGE FROM LYNX

Thank you for your purchase of a Sonoma Smoker by Lynx™. You've just entered the future of smoking, a world of amateur and professional chefs who are taking the world of outdoor cooking to new levels through technology.

Your Sonoma Smoker by Lynx™ has been designed to the same exacting standards and meticulous attention to detail every Lynx product enjoys. In addition to that, you're about to enjoy a high-performance stainless steel Smoker that incorporates patented MyChef™ technology, an interactive, innovative and chef-friendly system designed to elevate your cooking to new heights.

To get the maximum performance out of your Smoker, we recommend carefully reading through this entire manual before your first smoking. It contains important information on how to properly set up your Sonoma Smoker by Lynx™ and utilize the MyChef™ technology along with important safety tips and hints and tricks that will enhance your Smoking experience. Keep it handy for easy reference and should your Lynx Sonoma Smoker by Lynx™ change ownership, please make sure the new owner receives this manual. With proper use and care, your Lynx Sonoma Smoker by Lynx™ will provide years of trouble-free service.

Thank you again for joining the community of Lynx chefs. We love hearing about your experiences with our products. Please check us out on the Web and social media to let us know how you and your Sonoma Smoker by Lynx™ are doing.

Web: http://www.lynxgrills.com/

Facebook: https://www.facebook.com/LynxProfessionalGrills

Twitter: @LynxGrills

We wish you many years of happy smoking!

LYNX GRILLS

Powered by MyChef™

USE & CARE GUIDELINES

This use & care manual covers the Lynx Smoker models listed below. Some features and options will vary based upon the model that you purchased.

SONOMA SMOKER BY LYNX™ MODELS

BUILT-IN	FREESTANDING	SMOKER CHIPS
LSMK	LSMKF	LCSA (Apple)
	LSMKM	LSCH (Hickory)
		LSCM (Mesquite)
		LSCP (Pecan)
		LSCF (4 Pack)

Woodchip blends also available.

WARNINGS

WARNING

1. Do not open the touch pad containment box as there are no user-serviceable parts inside, and doing so will void all warranties. All other services should be performed by a qualified technician.
2. All gas lines must have a gas shut-off valve that is readily and easily accessible. Be sure you know where the shut-off is located. If you smell gas, check for gas leaks immediately. Check only with a soap and water solution. Never check for gas leaks with an open flame. (See INDEX: “Leak Testing” for further details)

WARNING

1. The outdoor cooking gas appliance and its individual shutoff valve must be disconnected from the gas supply piping system during any pressure testing of that system at test pressures in excess of 0.5 psi (3.5 kPa).
2. The outdoor cooking gas appliance must be isolated from the gas supply piping system by closing its individual manual shutoff valve during any pressure testing of the gas supply piping system at test pressures equal to or less than 1/2 psi (3.5 kPa).

STATE OF MASSACHUSETTS

1. Massachusetts requires all gas be installed using a plumber or gas fitter carrying the appropriate Massachusetts license.
2. All permanently-installed natural gas or propane installations require a “T” handle type manual gas valve be installed in the gas supply line to this appliance.
3. This does not apply to portable propane installations using a 20 pound cylinder.

IMPORTANT SAFETY PRECAUTIONS

1. Avoid wearing loose-fitting garments or long sleeves while smoking. They could ignite.
2. Never touch the smoker racks, hood or immediate surrounding metal surfaces with your bare hands while smoking.
3. Use an insulated glove or mitt when opening and operating the smoker. Always open the smoker lid slowly to allow heat and smoke to escape before fully opening.
4. The smoker hood must be fully opened while lighting the smoker. Releasing fuel into a closed smoker before lighting will not make it light sooner or more efficiently. It will only risk explosion and personal injury or death. Never lean over a hot smoker surface or look directly into the smoker when attempting to light.

IMPORTANT SAFETY PRECAUTIONS...*(Continued)*

5. Do not heat unopened food containers as pressure build-up will cause the container to explode.
6. Never use charcoal or any other solid fuel anywhere outside of the smoker chip tray.
7. Cooking excessively fatty meats and oils will cause flare ups. Internal fires or damage caused by doing so or by the smoker being left unattended while cooking are not covered under the terms and conditions of our warranty.
8. Never smoke without the drip pan in place. Always ensure the drip pan is under the food. Hot grease can leak downward and produce a fire or explosion.
9. Grease is extremely flammable. Let hot grease cool down before attempting to handle or dispose of it. The drip tray and bottom of the firebox should be cleaned of grease on a regular basis.
10. Do not use the smoker unless a leak check has been performed on all gas connections. (See INDEX: “Leak Test Procedure” for further details.)
11. Never operate the smoker while under the influence of alcohol or drugs.
12. Do not lean on side shelves and never place a load weighing more than 25 pounds on a side shelf.
13. If the burner does not light or goes out during operation, wait five (5) minutes before attempting to re-light.
14. Portable LP cylinders: Always shut off the main valve on the LP cylinder after each use.
15. Spiders and insects like to nest in the burner, venturis, valves and orifices of a smoker, disrupting the gas flow. This very dangerous condition can cause a fire behind the control panel, damaging the smoker and risking personal injury. If your smoker has been unused for a long time, inspect and clean the burner, venturis, valves and orifices. (See INDEX: “Cleaning your Lynx Smoker” for further details.)

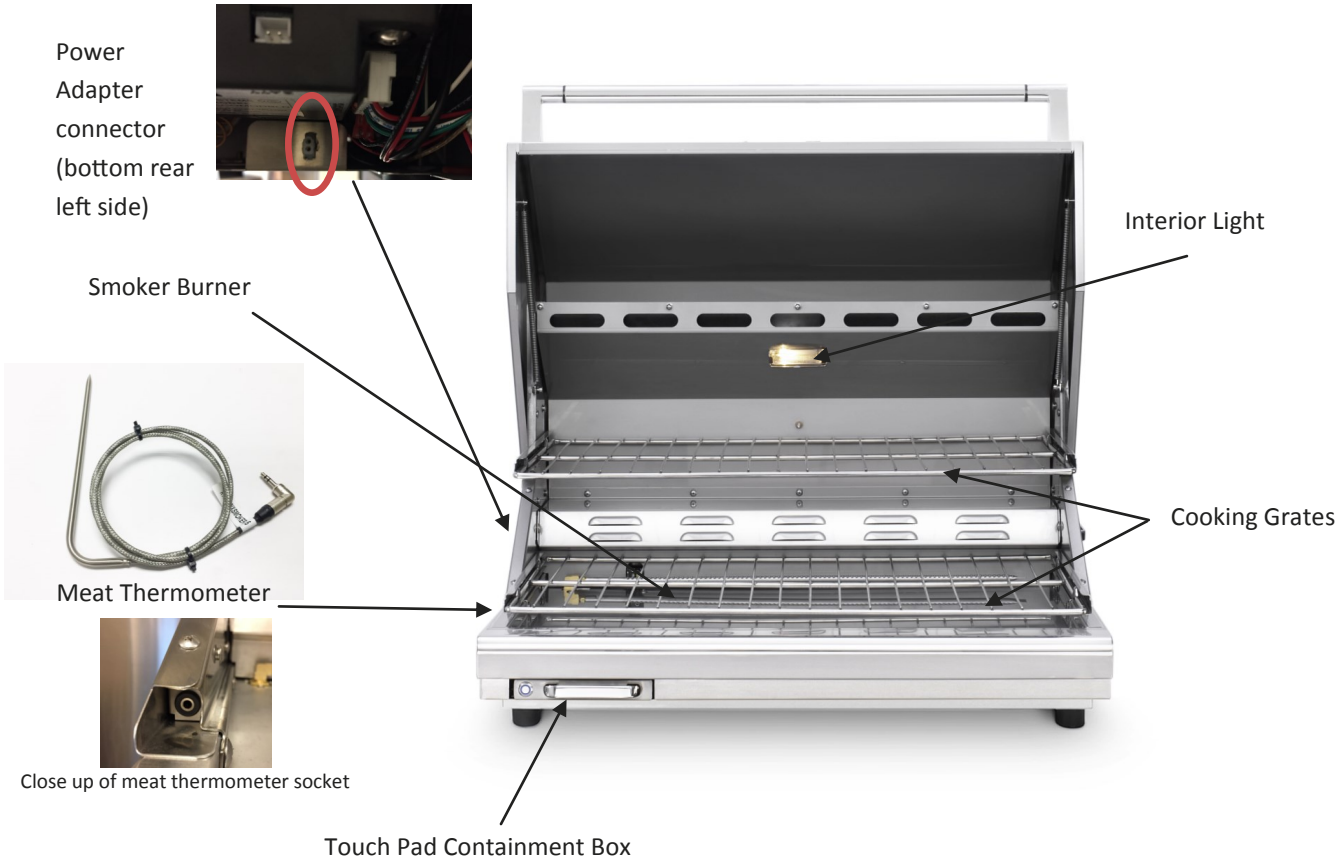

BEFORE YOU START

WARNING

- Never locate the smoker under a roof or overhang, in a building, garage, shed or other such enclosed area. Regardless of combustible or not.
- Installation must conform with local codes or, in the absence of local codes, with either the National Fuel Gas Code, AN-SIZ223.1/NFPA 54, Natural gas and Propane Installation Code, CSA B149.1, or Propane Storage and Handling Code, B149.2, in Canada.

IF SHIPMENT ARRIVES DAMAGED

VISIBLE LOSS OR DAMAGE

Be certain any visible damage to the carton is noted on freight bill or express receipt and signed by the person making delivery.

FILE CLAIM FOR DAMAGES IMMEDIATELY, regardless of extent of damage.

CONCEALED LOSS OR DAMAGE

If damage is unnoticed until the smoker is unpacked, notify the transportation company or carrier immediately and file a "concealed damage" claim with them. This should be done within (15) days of the date delivery is made to you. Be sure to hold on to the container for inspection. We cannot assume responsibility for damage or loss incurred in transit. (See Page 32: "Obtaining Service from Lynx" for further details.)

Shipping receipts should be signed "not inspected for concealed damage" if you did not open and inspect the product before the delivery driver leaves.

DAMAGE TO TOUCH PAD CONTAINMENT BOX

Should your touch pad containment box be damaged during shipment, please contact Lynx Customer Care immediately.

Under no circumstances should you open the touch pad containment box. There are no user serviceable parts inside and doing so will void all warranties.

UNPACKING & ASSEMBLY

The smoker arrives nearly ready to use and requires only minor assembly.

By carefully following the uncrating and unpacking steps, you'll be up and smoking on your Sonoma Smoker by Lynx™ in no time!

SHIPPING WEIGHT IS APPROX. 125 POUNDS AND CART UNITS MAY WEIGH OVER 175 POUNDS.

WARNING:
EXCESSIVE WEIGHT HAZARD!

Use two or more people to move or install this unit. Failure to follow this instruction can result in back or other personal injuries as well as potential damage to your Sonoma Smoker by Lynx™.

CRATE & CARTON

- IMPORTANT! Do not remove staples around the top of the carton. These staples hold a wooden pallet in place inside the carton that protects the unit from damage. Removing these staples may cause the pallet to fall on top of the smoker and damage the internal mechanisms that power the Sonoma Smoker by Lynx™ 's computer core.

How to Remove the Carton

- Cut the main strap holding the cart to the pallet.
- Remove the staples at the bottom of the carton.
- Lift off the carton.
- With assistance, remove the smoker cart from the pallet and place into desired location.

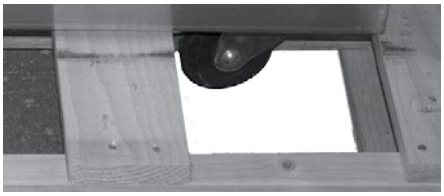

Smoker cart will not slide directly off pallet

On a freestanding smoker the wheels sit down in the gaps of the shipping crate so that the smoker can sit safely and solidly on the crate during shipping. The smoker cannot be slid directly off of the pallet.

BEFORE YOU START…*(Continued)*

One way to safely move the smoker off of the pallet is by lifting one end of the smoker high enough to place a ramp under the wheel and then lift the other end while rolling the smoker off of the pallet.

When pushing, lifting, or pulling a freestanding Smoker across gravel, grass, pavers, brick, stone, imperfections in the surface, or wood slatted decks be cautious and move slowly or use a carpet dolly. Failure to do so may damage the structure of the cart which will not be covered under warranty.

INTERIOR PACKING

Lynx uses sturdy tie-down cables and straps to ensure your smoker arrives at your home in the same condition that it left our factory. BE SURE YOU HAVE REMOVED ALL TIE DOWNS BEFORE USING YOUR SMOKER.

- Remove any loose items from the packaging, firebox, and drip tray.
- Ensure that the burner is properly seated on the orifice, level with the floor and firmly secure in the retaining bracket.

BUILT-IN INSTALLATIONS

The Sonoma Smoker by Lynx™ built-in smoker is designed for easy installation into masonry enclosures.

NOTE: Lynx built-in Sonoma Smokers are intended either for installation in a built-in enclosure constructed of non-combustible material or for an installation to a built-in enclosure constructed of combustible material .

The smoker drops into the opening shown in the cutout detail drawing (See Page 14: “Gas Connections”) and hangs from its counter-top trim. A deck is not required to support it from the bottom.

Pay special attention to the provisions shown for gas-line hookup

The enclosure should have ventilation holes to prevent gas build-up in the event of a leak. The deck ledges and counter should be flat and level. (refer to local codes).

The enclosure should have ventilation holes to prevent gas build-up in the event of a leak. The deck ledges and counter should be flat and level. (refer to local codes).

Keep the ventilation openings of the cylinder enclosure free and clear from debris.

This smoker requires that a 120-volt, 60 hertz, 15 amp GFI-

CLEARANCE TO COMBUSTIBLE/NON COMBUSTIBLE MATERIALS

Either materials may make direct contact with the edges of the firebox body up to the top surface of the firebox. Below the counter top surface the non-combustibles should not encroach on the cutout dimensions defined in this manual for both fit, access to service and airflow.

Above the counter top a minimum clearance of 6” to rear combustibles, and 5” on the left side of the smoker.

For non-combustible installations a 4” clearance is required immediately behind the smoker to allow the front hood to open. The smoker exhausts combustion products and cooking greases to the back of the unit. Never locate the smoker where this residue will be difficult to clean.

CLEARANCE FOR SMOKER CHIP TRAY

On the right side 24” clearance is required to allow the smoker chip tray to be removed.

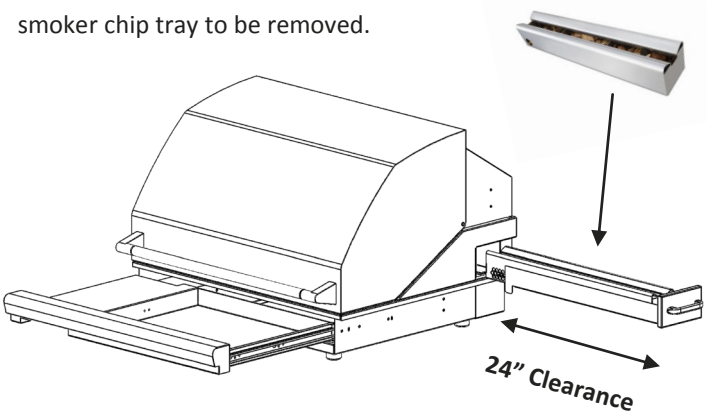

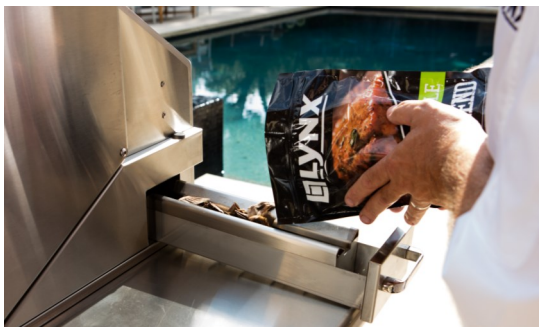

BEFORE YOU START...*(Continued)*

REAR HOOD CLEARANCE

A 4” clearance is required behind the smoker to provide unobstructed opening of the hood.

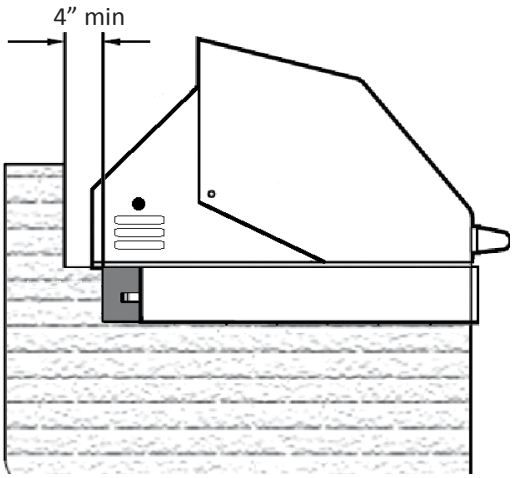

The smoker exhausts combustion products and cooking greases to the back. Never locate the smoker where this exhaust will be difficult to clean.

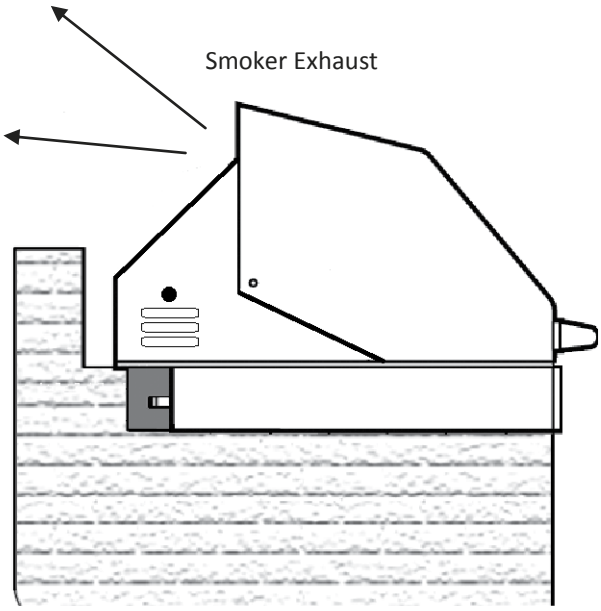

SPECIFICATIONS AND INSTALLATION

The guides, measurements and dimensions detailed below are designed to assist you with planning your outdoor kitchen.

NOTE: Due to continuing product innovation, specifications are subject to change without notice.

IMPORTANT: Please reference this Care & Use/Installation manual for details on gas plumbing requirements, electrical specifications and the proper installation of your Lynx outdoor kitchen equipment. An electronic copy of this manual can be downloaded from the Lynx Web site at www.lynxgrills.com.

IMPORTANT INSTALLATION NOTES

HOW LONG IS YOUR RUN?

Keep all gas supply lines as short as possible. Gas lines lose pressure over distance and with each elbow and tee that is added. This drop in pressure affects the smoker’s performance. (See INDEX: “Gas Supply Line Runs” for further details.)

BE SURE YOUR SMOKER IS LEVEL

Proper levelling during installation is critical to the smooth operation of your Sonoma Smoker by Lynx™. A smoker that is out of level will cause erratic burner combustion and inefficient, uneven heating. A carpenter’s spirit level should be used to level the smoker both front-to-back and side-to-side.

If the floor is uneven or has a pronounced slope, re-leveling may be required each time you move a freestanding Sonoma Smoker by Lynx™.

CUTOUT SPECIFICATIONS

The guides, measurements and dimensions detailed below are designated to assist you with planning your outdoor kitchen.

NOTE: Due to continuing product innovation, specifications are subject to change without notice.

IMPORTANT: Please reference this Care & Use / Installation manual for details on gas plumbing requirements, electrical specifications and the proper installation of your Lynx outdoor kitchen equipment. This manual can be downloaded from the Lynx website at www.lynxgrills.com

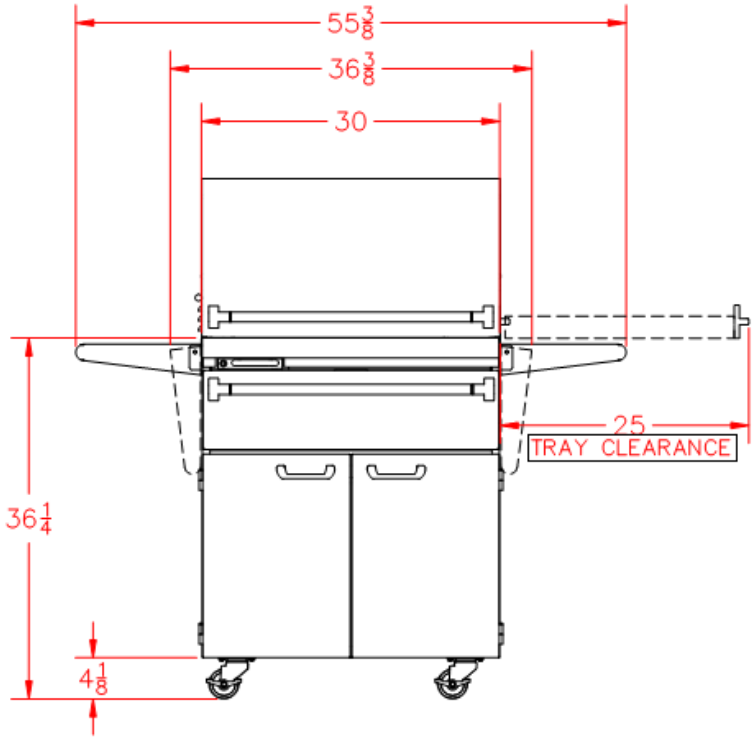

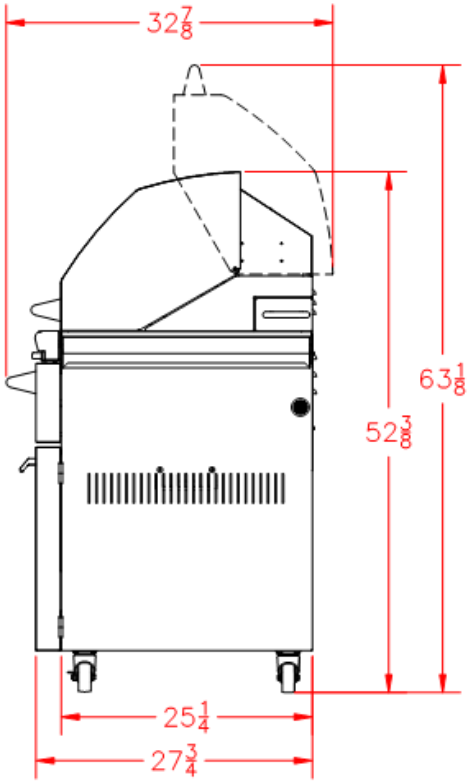

LSMK - SONOMA 30" SMOKER

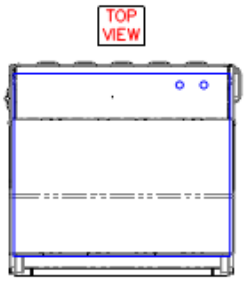

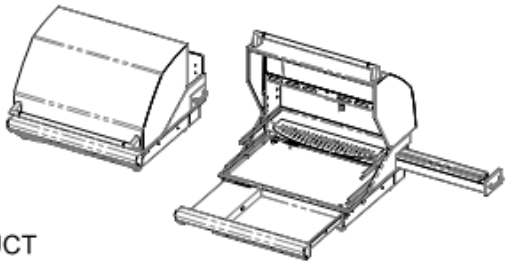

PRODUCT DIMENSIONS
SHIPPING WT: 125#
NET WT: 108#

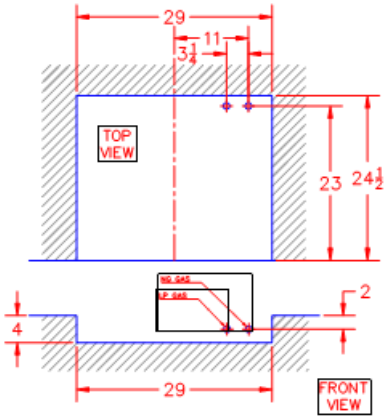

CUTOUT DIMENSIONS

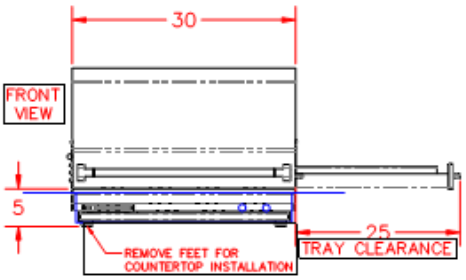

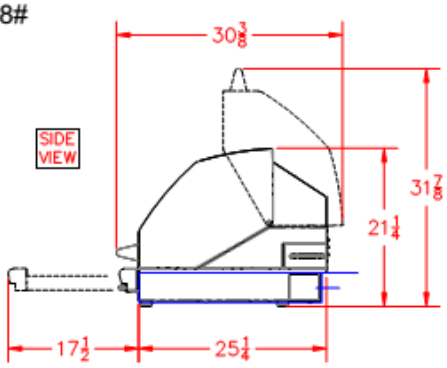

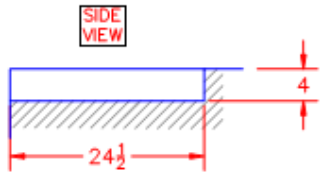

GAS CONNECTIONS

WARNING

NEVER CONNECT A GAS LINE DIRECTLY TO THE SONOMA SMOKER BY LYNX™. A PRESSURE REGULATOR MUST BE INSTALLED ON ALL GAS EQUIPMENT. ALL LOCAL CODES REQUIRE IT AND LYNX GRILLS SUPPLIES THE CORRECT REGULATOR FOR USE WITH YOUR SMOKER. REMOVING OR FAILING TO INSTALL THE PRESSURE REGULATOR CAN RESULT IN FIRE AND SERIOUS PERSONAL INJURY AND WILL VOID THE WARRANTY.

The Sonoma Smoker by Lynx™ is factory set to use either liquid propane or natural gas. It is critical that the gas you use matches that for which the smoker was set up. You can verify this by checking the rating plate.

The rating plate lists serial numbers, model numbers and gas type and is located in one or more of the following places:

- On the back of the Care & Use manual
- On the touch pad containment box

Ensure that the gas supplied meets with the minimum pressure requirements. Do not operate the smoker with any gas other than that for which the smoker has been set.

Water Column Requirements:

Fuel	WC Max Inlet	WC Min Under Full Load
NG	10" WC	4" WC
LP	14" WC	11" WC

Both the regulator and the manifold orifices have been tuned for the type of gas specified on the rating plate.

GAS CONVERSION KITS

Gas conversion kits are available from Lynx grills to allow the Sonoma Smoker by Lynx™ to operate on either natural gas or liquid propane gas. **These kits should be installed by a qualified technician.**

The kits come with complete installation instructions. These instructions should be read completely and fully.

All installation and all installation parts must conform to local codes with the National Electrical Code, ANSI Z223.1/NFPA 70 latest edition and the National Fuel Gas Code, ANSI Z223.1/ NFPA 54 in the U.S. and CGA-B149.1/.2 in Canada.

Canadian installations must conform to CGA-B149.1/.2 natural gas/propane installation code. (Canada)

NATURAL GAS

Lynx Grills recommends that only qualified professionals perform the required plumbing on this product.

To ensure satisfactory performance, the gas supply line must be sized to accommodate the total BTU requirements of all the gas-fired equipment that will be connected to that line.

In no case should pipe less than 3/4” inside diameter or 1” outside diameter ever be used to connect this product.

- Calculate the total BTU output of all equipment and refer to “INDEX: Gas Supply Line Runs” for allowable run distances for ¾ inch pipe. Failure to meet these minimum requirements may reduce performance of the smoker and any other appliances running on that supply line.
- Always keep supply line runs as short as possible. (See INDEX: “BTU Output” for specific model outputs)
- A gas shut-off valve must be installed in an easily accessible location by a qualified plumber.
- Keep threading compound off of the first two pipe threads to avoid having any small pieces of compound break loose and clog a burner valve or orifice. **Do not use threading compound on any flare fittings.**

For built-in installations, it is required that a metal flex hose certified for gas use be used. (See INDEX: “Gas Connections” for typical permanent hook up.) Please ensure all installations conform to local codes.

Keep last two threads clean

Connect to regulator (NG/Hard pipe LP)

For *freestanding* units using natural gas, Lynx recommends using a mobile flex gas line.

This is available at your local hardware store or from your dealer.

GAS CONNECTIONS...*(continued)*

LP GAS REGULATOR INFORMATION

Smokers set up for liquid propane gas come equipped with a liquid propane hose/ regulator assembly for connection to a standard 20 lb. Liquid propane cylinder (Type 1). All fittings necessary to attach the assembly to the smoker are included.

LP cylinder with type 1 valve connection

Permanently plumbed liquid propane connections, such as those in line with a bulk cylinder, require a 4/11 regulator (Lynx P/N 30781) which is available at no charge from Lynx.

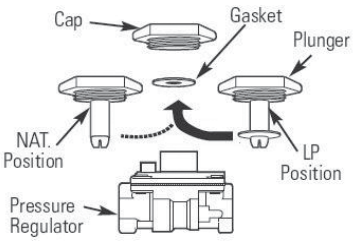

When using the 4/11 regulator, you must ensure that it is set for the proper fuel type. This is done by removing the regulator cap and gasket and looking at the bottom of the plunger to see what fuel type is visible. This is the regulator fuel setting. NAT is for natural gas and LP is for propane gas. The LP setting can be further identified by the large diameter disk on the bottom of the plunger. To change from one gas to the other, simply push the plunger to the side to snap it out of the cap, turn the plunger so it reads the desired gas type on the bottom, and push the plunger until it snaps back into place in the cap and then replace the cap into the regulator.

When exchanging your cylinder for a refill, exchange only for a Type 1 20lb cylinder with an over-fill protection device.
Never use a cylinder with a damaged valve.
A dented or rusty LP cylinder may be hazardous and should be avoided. If in doubt, have it checked by your liquid propane supplier.

WARNING

Do not change the regulator/hose assembly or use any other assembly than the one supplied with your Lynx Sonoma Smoker by Lynx™.
Do not attempt to use a 5LP-A equipped regulator/hose assembly with a standard 510 POL cylinder/valve assembly.
Do not store a spare LP-gas cylinder under or near this appliance.
Never fill the cylinder beyond 80 percent full.
If the information above is not followed exactly, a fire causing death or serious injury may occur.

NEVER CONNECT AN UNREGULATED GAS LINE TO THE SMOKER.

Liquid Propane Cylinder Requirements

The LP cylinder must be constructed and marked in accordance with the specifications for LP gas cylinders of the U.S. Department of Transportation (DOT) and designed for use with a Type 1 system only.

Cylinders of free standing smokers must be secured using the provided cylinder retention system to avoid accidental movement. Make sure the hose between the smoker and the propane bottle does not touch the back or bottom of the firebox.

Always check for leaks after every liquid propane cylinder change. (See INDEX: “Leak Test” for further details.)

Always shut off the liquid propane gas supply at the cylinder when the Sonoma Smoker is not in use.

Cylinders must be stored outdoors in a well- ventilated area out of the reach of children. If Your smoker is stored indoors, the liquid propane cylinder must be stored outside.

GAS CONNECTIONS...*(continued)*

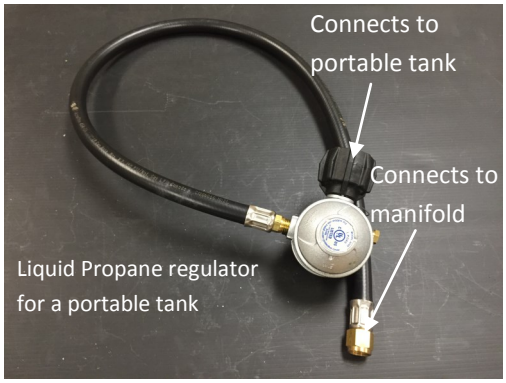

Liquid Propane Connections

Make sure the liquid propane cylinder valve is completely closed. It is possible for the valve to be opened without releasing gas, but as soon as you start connecting the regulator, gas can flow from the connection.

Insert the regulator inlet into the cylinder valve and turn the black coupler clockwise until the coupler is hand tight. Do not over-tighten this connection.

To disconnect the coupler, first make sure the main cylinder valve is turned off. Grasp the coupler and turn counter-clockwise. The inlet will then disengage.

Always leak test the connection after refilling or exchanging liquid propane cylinders. (See INDEX: "Leak Test" for further details.)

Gas Line Purging

You should purge the gas line of air before attempting to light the oven.

- Make sure all oven controls are in the "OFF" position.
- Disconnect the line from the manifold. Slowly turn on the main gas supply.
- As soon as you smell gas, shut off the supply
- Reconnect the line, and test for leakage.
- Turn the supply back on slowly.
- Wait at least 5 minutes before attempting to light the burner.

ELECTRICAL CONNECTIONS

WARNING: ELECTRICAL GROUNDING

Product installation must meet local electrical codes, or in the absence of local codes, the latest edition of the National Electrical Code ANSI/NFPA No. 70 or the Canadian Electrical Code CSA C22.1.

Use only a Ground Fault Interrupter (GFI) protected circuit with this outdoor cooking gas appliance.

Do not use this outdoor cooking appliance if it has been submerged underwater without a thorough inspection by a qualified technician.

This smoker is equipped with a three-prong (grounded) electric plug for your protection against shock hazard and must be plugged directly into a properly grounded three-prong outlet. Never cut or remove the grounding prong from this plug.

Use only extension cords with a three-prong grounding plug, rated for the power of the equipment and approved for outdoor use with a "W-A" marking.

To protect against electric shock, do not immerse any part of the power cord, an extension cord, or any plugs in water or other liquid.

Unplug the product before thorough cleaning. Allow it to cool before putting on or taking off parts.

Do not let the cord hang over the edge of a table or touch hot surfaces.

Do not use an outdoor cooking gas appliance for purposes other than intended.

Do not operate any outdoor cooking gas appliance with a damaged cord, plug, or after the appliance malfunctions or has been damaged in any manner. Contact Lynx for repair.

ELECTRICAL CONNECTIONS...*continued*

CONNECTION TO AC POWER

Installation requires an outdoor 120VAC 15A GFI (Ground Fault Interrupter) electrical outlet adjacent to the Sonoma Smoker by Lynx™.

The GFI outlet features an internal break that reduces shock hazard. This type of outlet should be installed by a qualified electrician either inside the island enclosure for built-in units, or near the location where a free standing unit will be used.

If the electrical system fails to operate, a connection may have come loose in shipping or the GFI may have tripped requiring a re-set. See the Trouble-shooting section for more details.

Ask your dealer or call Lynx at 888-289-5969 for more information.

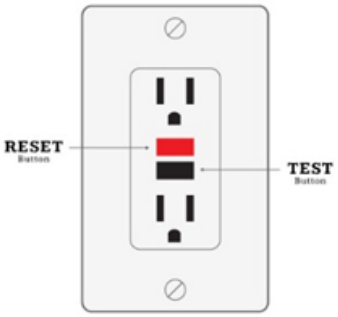

Kent Rathburn
Iron Chef Restaurateur

FINAL CHECKS

LEAK TESTING

DANGER!

To prevent fire or explosion hazard, DO NOT smoke or allow any potential source of ignition (sparks, electrical arcing, etc) in the area while performing a leak test. Leak tests should be conducted outdoors only. Never conduct a leak test using fire or flame.

Leak Test Procedure:

- Create a soapy solution of 1 part soap and 3 parts water.
- Confirm that all control dials are in the off position.
- Turn on the fuel supply. For natural gas, turn the valve handle 1/4 turn to align with the gas flow.
- For L.P., turn the cylinder valve dial counter clockwise one full rotation.
- Apply the soap solution generously by paint brush or squirt bottle on all connections and fittings.
- If bubbles appear to “grow” on any of the connections, you have a gas leak. IMMEDIATELY turn off the gas supply.

Fixing a Gas Leak:

- Shut off the gas supply
- Turn all smoker controls to the “ON” position to purge the smoker of any gas build-up, then turn the controls back “OFF”.
- Wash off the soapy solution with cold water and dry.
- Tighten the loose joint, or replace the faulty part with manufacturer-recommended replacement parts.
- DO NOT attempt to repair the L.P. cylinder valve if it is damaged. The only way to safely resolve a damaged cylinder is to REPLACE IT.
- Repeat the leak test to ensure that no leaks are present.

FINAL CHECK

IMPORTANT:
Make sure you know where the main gas supply shut-off valve is located.

Finally, for safety and for proper use and care, you must have this manual. Please keep it somewhere safe for future reference.

For technical support and customer service, call:
Lynx Customer Care Department
7300 Flores Street
Downey, CA 90242
Ph.: 562-299-6900
Toll Free: 888-289-5969
Fax: 562-299-6978

GETTING STARTED...*continued*

- Shut down the Settings app
- Activate the Sonoma Smoker by Lynx™ app
- If this is the first time you've activated your Sonoma Smoker by Lynx™ app, you will be asked to input the serial number then the PIN number for the smoker.
- The PIN and serial numbers assigned to the smoker can be found on the control panel tray.
- Open the Sonoma Smoker App and click Create Account then enter your smoker serial number and PIN then click Continue.
- Enter your email address, password and your registration information and click Create Account. You will get a confirmation email.
- Open the confirmation email and follow instructions to activate your account.

- Once the app has been connected to the Sonoma Smoker by Lynx™, open the app to the "Smoker Status" page.
- Click the "Resources" icon at the bottom of the screen.
- Click "Wi-Fi" settings
- You will see a list of networks available for your Sonoma Smoker by Lynx™. Choose your home network.
- Depending on your security settings, you may need to enter your home network's password to allow the Sonoma Smoker by Lynx™ access.
- Once the Sonoma Smoker by Lynx™ has successfully accessed your home network, you will receive a "Success" message.
- After you have successfully connected the Sonoma Smoker by Lynx™ to your home network, you may have to return to your device's "Settings" app and reconnect with your home network.

DOWNLOADING IN YOUR SONOMA SMOKER BY LYNX™ FOR IOS DEVICES

- Click the "App Store" icon on your iPhone or iPad
- Ennsure that your have iOS 7.0 or above (check Settings>General>About>Version to see what version of iOS you're running.)
- In the Search box, type in "Sonoma Smoker by Lynx" to find the app.
- Click to download and follow the guided instructions.

DOWNLOADING YOUR SONOMA SMOKER BY LYNX™ APP FOR ANDROID DEVICES

- Click the "Google Play" icon on your Android phone or device. (This is typically under the Settings tab.)
- Ensure that you have Android 2.1 or above. (Check Settings>About Phone and look for "Android Version" or "Firmware Version.")
- In the Search box, type in "Sonoma Smoker by Lynx" to find the app.
- Click to Download and follow the guided instructions.

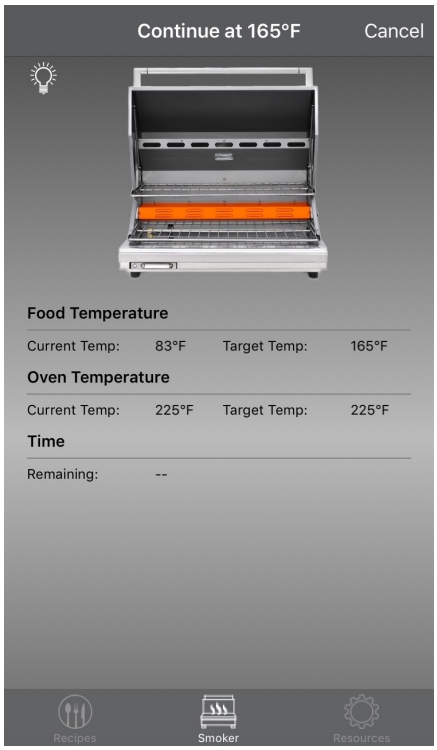

GETTING STARTED

MEET YOU SONOMA SMOKER BY LYNX™

Congratulations on your purchase of a Sonoma Smoker by Lynx™! The pages that follow will help you get the most out of your Sonoma Smoker by Lynx™. Before that though, it's important to understand that the Sonoma Smoker by Lynx™ has several basic requirements.

THINGS TO KNOW ABOUT THE SONOMA SMOKER

1. The Sonoma Smoker requires gas and electricity to operate.
2. The Sonoma Smoker is powered by a control panel. When turning the smoker on, there will be a wait time of less than 60 seconds while the smoker boots up. Any time the smoker is loading or booting, the Lynx logo will be on the screen letting you know the smoker is busy.
3. The Sonoma Smoker requires a Wi-Fi internet connection.

PLUGGING IN YOUR SONOMA SMOKER BY LYNX™

Your Sonoma Smoker by Lynx™ comes with a power supply designed to fit into a 120 volt AC 15 amp GFI (Ground Fault Interrupter) electrical outlet.

This power cord must be plugged in prior to any attempt to utilize the Sonoma Smoker by Lynx™.

Your Sonoma Smoker by Lynx™ is activated by pressing the round POWER ON/OFF switch located on the left hand side of the smoker.

CONNECTING YOUR SONOMA SMOKER BY LYNX™ TO YOUR WIRELESS NETWORK

Before you can connect your Sonoma Smoker by Lynx™ to your wireless network, you must first download the Sonoma Smoker by Lynx™ app to a compatible iOS or Android Device.

Be sure your Sonoma Smoker by Lynx™ is plugged in and turned on before attempting to connect it to your wireless network.

In order to connect your Sonoma Smoker by Lynx™ to your wireless network:

- Activate your iOs or Android phone or tablet
- Click on the "Settings" app
- In Settings, click on "Wi-Fi"
- You will see "Sonoma Smoker XXXX" in the selections under "Choose a Network."
- Tap "Sonoma Smoker XXXX" to connect to the Sonoma Smoker by Lynx™ Wi-fi spot

Ensure you connect the Wi-Fi antenna.

PRE-SMOKE CHECKLIST

BEFORE YOUR *FIRST* USE

There are a few must-check safety precautions to consider before you use your smoker. Please be sure that:

- All packing materials and tie-downs have been removed from the burner. (See INDEX: “Unpacking & Assembly” for further details.)
- You have plugged in the electric cord. (See INDEX: “Electric Requirements” for further details.)
- A qualified plumber has performed a leak test on all the fittings that supply fuel to your smoker.
- You have downloaded and set up the Sonoma Smoker by Lynx™ App. (See INDEX: “Downloading Your Sonoma Smoker by Lynx™ App for iOS and Android devices.”)
- You have connected your Sonoma Smoker by Lynx™ to your home’s wireless network. (See INDEX: “Connecting Your Sonoma Smoker by Lynx™ to a Wireless Network.”)

AT EACH NEW SEASON

At the start of each new grilling season you should remove the smoker racks and check the burner, orifice, and valves for obstructions.

Spiders and insects often nest in these areas of the smoker and can disrupt airflow, causing damage to the smoker and personal injury.

Also, check all hoses, wires, and fitting for damage, abrasion, wear and tear.

CHECKLIST BEFORE EACH USE (FOR YOUR SAFETY)

Do you smell gas? If yes, shut everything off and call the gas company or a qualified plumber to check for leaks. If not, please continue.

Is your cooking area free and clear of any combustibles besides your food that might ignite? If not, please clear the area before starting the lighting process. If yes, please continue.

If you are using a portable propane cylinder, is it connected and leak tested? If not, check the connection before continuing. If yes, please continue.

HOW TO LIGHT YOUR SMOKER

Before each use, complete the checklist.

Remove the smoker cover.

Press the ON/OFF button. The blue LED light that surrounds the switch will indicate that the smoker is energized.

After 5-20 seconds the menu will appear on the touchscreen.

The smoker hood must be open during lighting and closed during pre-heat or set temperature will not be achieved.

MANUAL MODE (App)

Press Manual on the top right hand corner of the Sonoma Smoker by Lynx™ app .

Note that entering manual mode will ALWAYS cancel Recipe Mode .

You control the temperature and time to cook your meal by adjusting the attributes on the app installed on your smart device.

MANUAL MODE (Touch pad)

During Manual Cook, temperature is controlled by the touch pad of the Sonoma Smoker by Lynx™.

You control the temperature and time to cook your meal.

You can adjust the time and temperature via the touch pad.

Note that entering manual mode will ALWAYS cancel Recipe Mode .

TIMED COOK

Timed Cook allows you to smoke without a recipe by utilizing the Sonoma Smokers MyChef™ technology to select a cooking time, internal temperature and food temperature.

To enter Timed Cook mode:

- Open the Sonoma Smoker App
- Select the Smoker icon
- Select the smoker oven temperature
- Set the time
- Set the desired food temperature
- Set a reminder time
- Select "Cook Now"

To cancel a Timed Cook:

From the app select cancel on the top hand right side.

Touch Pad

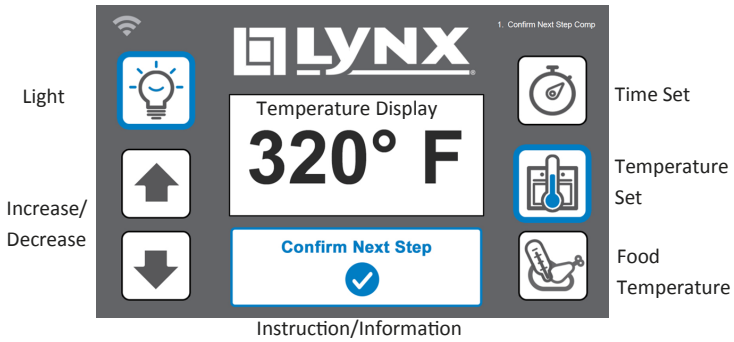

BASIC OPERATIONS

RECIPE MODE

Once the cooking process begins, it can be controlled through the use commands of on the touch pad or via the Sonoma Smoker by Lynx™ app.

Pre-heating and temperature control is automatically controlled by MyChef™.

Start your Sonoma Smoker by Lynx™ App

Click on "Recipe" tab

"**Lynx**" features all recipes created by our executive chef specifically for the Sonoma Smoker by Lynx™

"**My Recipes**" includes all user-created Sonoma Smoker recipes

"**Community**" contains all the recipes shared by other Sonoma Smoker users.

Select the recipe you wish to use.

Click "Cook Now"

Modify cooking time if needed.

Click on "Cook Now"

to start the cooking process.

The cooking process can be completed or aborted via the cancel button.

USING YOUR SONOMA SMOKER BY LYNX™ RECIPE DATABASE

Your Sonoma Smoker by Lynx™ recipe database is accessed via your Sonoma Smoker by Lynx™ App by clicking on the "Recipes" tab at the bottom of the screen. Recipes available to cook are listed on the left hand side under three categories: "Lynx," "My recipes," and "Community."

Lynx Recipes

Lynx recipes are recipes that have been specially formulated for the Sonoma Smoker by Lynx™ by Lynx's own executive chefs. This database will be automatically updated with new recipes at regular intervals.

My Recipes

The "My Recipes" tab is where you can store your own recipes that will then be followed by the Sonoma Smoker by Lynx™. To create your own recipe:

- Click on the "+" sign to bring up the "New Recipe" Screen
- Click on the "Recipe Name" field to input a name for your recipe.
- Click on Cooking Type for food temperature mode.
- Click on Food Type to choose the type of food your recipe will use.
- Click on the "Share on Community" switch so that it shows green if you wish to share your recipe with the Lynx Sonoma Smoker by Lynx™ community.
- The Ingredients and Directions tabs are text screens where you can put down ingredients and the recipe directions, respectively.
- Click on the "Add Step" to input the recipe's step name, the action you will need to take in the recipe, the temperature for the smoker and the amount of cooking time the step will take. Click "Done" when you've completed entering the step.
- Note that you may enter as many steps as you wish.

When you've completed entering the recipe information, add a last step to "Remove Food". Then click on "Done" to save it to your database.

Community

This tab contains a selection of recipes created and uploaded in "My Recipe" by the community of Sonoma Smoker by Lynx™ users.

When you have selected the recipe you wish to use, click "Cook Now".

Then:

- Click on "Send to Smoker."
- Follow the command prompts to carry out the recipe.

CLEANING YOUR SONOMA SMOKER BY LYNX™

STAINLESS STEEL

Lynx products are known for their attractive appearance. We achieve this by selecting only the finest grades of stainless steel and applying exacting workmanship.

In order to maintain this attractive appearance over the life of the smoker, it is important to take the following steps:

- After each use, wipe down the exterior of the smoker to remove grease and splatters.
- Be sure to follow the cleaning instructions for keeping the cooking surface clean and ready for use.
- Use a commercially available Stainless Steel cleaner to clean and polish the exterior surfaces.

Doing these things on a regular basis minimizes the amount of effort required.

Part of the appeal of your Lynx Sonoma Smoker by Lynx™ is the fine grain finish. When removing stubborn stains:

- Do not use metallic abrasives and always rub in the direction of the grain.
- Some household cleaning products are not suitable for stainless steel and high heat; be sure to read the label before using on your Sonoma Smoker by Lynx™.
- Always use the mildest cleaning solution first, scrubbing in the direction of the grain. Specks of grease may gather in the grain of the stainless steel and bake onto the surface, giving the appearance of rust.

To remove these baked on foods, use a fine to medium grit non-metallic abrasive pad (Scotch Brite is good) in conjunction with a stainless steel cleaner.

Solutions used for cleaning concrete and masonry can be very corrosive and will attack stainless steel. Ensure your Lynx products are well protected before you allow the use of such chemicals near your smoker.

SPECIAL NOTE FOR LOCATIONS NEAR POOLS AND COASTAL AREAS:

The 304 stainless steel material used in the construction of a Lynx Sonoma Smoker by Lynx™ is highly rust resistant, however chlorine in the air from swimming pools or salt in the sea air may cause surface rust to appear and even create some pitting if left on the product.

Here are a few tips to avoid this:

Regularly wipe down the exterior surfaces with a damp cloth (Micro fiber cloths such as Ecloth perform very well.)

Allow the surfaces to dry before installing the cover. Do not cover a damp smoker.

In extreme environments, apply a rust inhibitor which leaves a microscopic protective layer on the smoker. Products that provide a layer of vapor corrosion inhibitors (VpCl™) protect the surface very well.
For seasonal storage use the product referred to above, ensure the smoker is dry and then cover and secure the cover to minimize the amount of damp air getting to the surfaces.

THE LYNX LIMITED LIFETIME WARRANTY PROVIDES PROTECTION AGAINST RUST-THROUGH OF PARTS THAT RENDER THE PRODUCT INOPERATIVE. IT DOES NOT COVER OCCASIONAL SURFACE RUST OR STAINING DUE TO ENVIRONMENTAL CONDITIONS.

After your first use, certain areas of the smoker may discolor from the intense heat given off by the burner – this is normal and cannot be cleaned off.

For light and heavy food stains there are many different stainless steel cleaners available.

There will be darkening on the inside of the smoker which is normal. This can be cleaned off with an interior oven cleaning product.

TROUBLESHOOTING YOUR SONOMA SMOKER BY LYNX™

SMELL OF GAS WHILE COOKING

If you smell gas while the smoker is operating, immediately turn off the burner and shut off the main fuel supply.

- Perform a leak test. (See INDEX: “Leak Test procedure” for further details)
- Check for blockages.

BEFORE YOU CALL FOR SERVICE

Please check a few things before calling for service:

- Is there fuel supplied to the smoker?
- Is the main shut off valve open?
- Are you using the correct type of fuel (Liquid propane or natural gas)
- Is your propane cylinder empty? Have you recently refilled the propane cylinder? If so, is the connection tight?
- Have you opened the valve on the propane cylinder?
- Is the smoker plugged in to a live electric circuit?
- Has the GFI outlet tripped requiring a reset?

PROBLEMS WITH WIRELESS CONNECTIVITY

If you do not have at least a 60% signal on your smart device while standing at your smoker, your smoker will not perform optimally. Here are some suggestions for improving your network:

Position your wireless router, modem router, or access point in a central location. The best place for a Wi-Fi router is in the center of your home.

- The distance between your router and your Sonoma Smoker should not exceed 50 ft.
- Verify that there are no obstacles between your Sonoma Smoker and the router.
- Appliances, metal objects, cordless phones, stone walls, fireplaces, etc. decrease Wi-Fi strength.
- Check the cable that connects the modem to the router to make sure it is in good condition. If not, replace the cable.
- Replace your router antenna with a Hi-Gain wireless antenna. They boost the signal strength and aim the signal in one direction.
- The Sonoma Smoker by Lynx™ will perform better with an N router.
- Reduce wireless interferences by using devices that communicate via the 5.0 GHz frequency instead of the more common 2.4 GHz frequency (same frequency as baby monitors, garage door openers, cordless phones, microwave ovens).
- iPhone 5, 5C, 6, or newer, iPad version 2.0 or newer or Android 4.4 operating system or newer

Add a wireless repeater

A wireless repeater is a device that extends your wireless network's range without requiring you to add any wiring. Place the repeater halfway between your wireless router and your Sonoma Smoker to get an instant boost in your wireless strength.

For additional troubleshooting of wireless connections, contact your local Wi-Fi installation expert.

Refer to “Quick Start Guide” for connection details.

To find your operating system on your smart device:

iPhone and iPad: Go to Settings /General/ About/ Phone to find your model number

Android: Go to Settings, About Phone, Android version

Wi-Fi TOUCHPAD ICONS

Connected

Wi-Fi Reset

Attempting Connection

Off

The four digit PIN can be located on the rating plate. This is your personal number that insures that no version of the Sonoma Smoker by Lynx™ app except yours is able to control your Sonoma Smoker by Lynx™.

SMOKER WILL NOT LIGHT

First, confirm that the smoker is getting electricity by checking the light or the touch pad of your Sonoma Smoker by Lynx™.

Check the Igniters

Your Lynx Sonoma Smoker by Lynx™ uses an electric spark ignition system.

- Your Sonoma Smoker by Lynx™ can be deactivated by pressing the POWER ON/OFF switch located on the left hand side of the smoker.
- The igniter is clearly visible inside the smoker, look for a spark.
- If it does not spark, call Lynx for service at 888-289-5969.

Check the regulator.

Make sure that the regulator and hose assembly is the one designed for and supplied with your Lynx smoker and that it is correctly set up for the type of fuel you are using. (See INDEX: "Regulator Conversion" for further details.)

The hose and regulator provided by Lynx Grills must be used if your smoker is set up for use with a liquid propane gas cylinder. If using hard –piped LP contact Lynx for a free hard-pipe regulator.

Check that there is no physical pressure being applied to the regulator attached to the back of the smoker. The regulator contains a flexible diaphragm and should not be allowed to touch the smoker body or its surroundings.

Check for obstructions.

Ensure that the burner is clean and free from obstructions.

Liquid Propane Units:

Is the cylinder almost empty?

Almost empty cylinders may not have sufficient pressure to run the burner at high heat.

Have the line pressure checked by a qualified technician.

Flow limiting device?

Improper lighting procedure may have activated the liquid propane cylinder's flow control device, reducing heat output.

if this should occur..
Turn the gas tank valve clockwise to off.
Release the pressure to the tank regulator by partially removing the hose connection. You should hear a hiss as the pressure releases. Reconnect the regulator and SLOWLY open the tank valve. This will reset the tank flow control.

Bulk Liquid Propane Cylinder Users:

Bulk liquid propane cylinder lines must be properly regulated.

Ensure that you are using a 4/11 appliance regulator supplied by Lynx and converted to liquid propane gas. Also, ensure that you do not have more than one regulator in line.

Natural Gas Units:

- Supply line

Ensure that the supply line is at least ¾" inside diameter or 1" outside diameter.

- Check Line pressure

Natural gas inlet pressure should be at least 5" W.C. and manifold pressure not less than 4" W.C.

- Check burner for blockages.

LOW OR INSUFFICIENT HEAT

Proper levelling during installation is critical. A smoker that is out of level will cause erratic burner combustion and
inefficient, uneven heating. A carpenter's spirit level should be used to level the smoker both front-to-back and side-to-side.

If the low heat problem persists:

- Check the gas supply line sizing requirements.
- Check the gas supply line for kinks or damage.

LIGHTS WILL NOT LIGHT

- Check power

Ensure that the smoker is connected to a live AC power source, or the GFCI outlet has not been tripped.

OBTAINING SERVICE FROM LYNX

Before calling Lynx Customer Care, please make sure you have the following information:

- Model number
- Date of purchase
- Proof of purchase by the original owner
- Serial number for the Smoker (located on the rating plate on the touch pad casing).

For Warranty Service or a referral for an authorized service agent near you, contact Lynx Customer Care at:

(888) 289-5969

Agents are available Mon-Fri from 6AM to 4:30 PM, and Saturday from 8AM to 1PM Pacific Time.

www.lynxgrills.com

Your satisfaction is of the utmost importance to us. If a problem cannot be solved to your satisfaction, please call, write, fax or email us:

Lynx Professional Grills 7300 Flores Street

Downey, CA 90242

Service: (888) 289-5969

Tel: (562) 299-6900

Fax: (562) 299-6978

service@lynxgrills.com

Contact Lynx for replacement parts. Parts are shipped

F.O.B. Downey, CA.

THE LYNX STORY

Lynx began with a vision.

A small group of manufacturing engineers with over a century of collective experience had a dream. They dared to take their extensive commercial manufacturing know how and create a line of outdoor cooking products that offer commercial elegance and performance to the consumer market. Lynx has taken the quality, workmanship, service and innovation of the commercial market and incorporated it into the Lynx Professional grills line of consumer and commercial products. The combination of creative design, superior materials and exceptional craftsmanship elevates Lynx products to a class of their own.

Lynx original commercial products are used every day in restaurants, hotels, and theme parks across the USA:

LYNX SATISFIED CUSTOMERS

- TGI Fridays
- Applebee's
- Houston's
- Red Lobster
- Hard Rock Café
- Wolfgang Puck's
- Cheesecake Factory
- Red Robin
- Planet Hollywood
- Hilton
- Hyatt
- Four Seasons Marriott
- Le Meridian
- Sheraton
- Conrad International
- Bellagio
- NewYorkNewYork
- MGM Grand
- Treasure Island
- Mirage
- Paris
- Excalibur
- Mandalay Bay
- Riviera
- Desert Inn
- Hard Rock Hotel
- Disney World

SONOMA SMOKER BY LYNX™ LIMITED WARRANTY

I. Limited Lifetime Warranty

The stainless steel smoker body, cooking grates, and burner are warranted to be free from defects in material and workmanship when subjected to normal domestic use and service for the lifetime of the original purchaser. This warranty excludes surface corrosion, scratches, and discoloration which may occur during normal use. This warranty is limited to the replacement of the defective parts, with the owner paying all other cost including labor, shipping and handling.

II. Limited Five –Year Warranty

The following smoker parts are warranted to be free from defects in material and workmanship, when subjected to normal domestic use and service, for a period of five (5) years from the original date of purchase; manifolds and gas valves. This warranty is limited to the replacement of the defective parts, with the owner paying all other costs including labor, shipping, and handling.

III. Limited Two-year Warranty

All other smoker components, including the touch pad are warranted to be free from defects in material and workmanship, when subjected to normal domestic use and service, for a period of two (2) years from the original date of purchase. This warranty is limited to the replacement of the defective parts, with the owner paying all other costs including labor, shipping and handling.

IV. Limited One-Year Warranty

For a period of one (1) year from the original date of purchase, Lynx will replace or repair parts found to be defective at no cost to the original purchaser. This includes the cost of shipping replacement parts and, where necessary, service labor at prevailing local rates by a Lynx authorized service person. Service will be provided during normal business hours and must be authorized in advance by Lynx.

V. Limitations & Exclusions

1) This Warranty shall apply to products purchased and located in the United States and Canada. Products must be purchased in the country where service is requested.

2) Warranty applies only to the original purchaser and may not be transferred.

3) Warranty is in lieu of all other warranties expressed or implied and all other obligations or liabilities related to the sale or use of its smoker products.

4) Warranty shall not apply and Lynx is not responsible for damage resulting from misuse, abuse, alteration of or tampering with the appliance or computer box, accident, hostile environment, flare-up fires, improper installation, or installation not in accordance with the instructions contained in this manual, or the local codes.

5) Lynx shall not be liable for incidental, consequential, special or contingent damages resulting from its breach of this written warranty or any implied warranty.

6) Some states do not allow limitations on how long an implied warranty lasts, or the exclusions of or limitations on consequential damages. This warranty gives you specified legal rights and you may have other rights which vary from state to state.

7) No one has the authority to add to or vary Lynx's warranty, or to create for Lynx any other obligation or liability in connection with the sale or use of its products.

8) Limited to the replacement of defective parts with the owner paying all other costs including labor.

V. What is not covered: Lynx shall not be responsible for and shall not pay for the following

1. Installation or start-up, damages or problems caused by improper installation or use;

2. Service by an unauthorized service provider;

3. Damage or repair due to service by an unauthorized service provider or use of unauthorized parts;

4. Warranty does not apply to products installed in any commercial or non-residential application. Examples of excluded applications include, but are not limited to day care centers, schools, bed and breakfast centers, churches, private clubs, fire stations, club houses, common areas in multi-family dwellings, restaurants, hotels, nursing homes, food service locations and institutional food service locations.

5. To correct normal adjustments or settings, due to improper installation, commissioning or local gas supply properties.

6. Shipping and handling costs, export duties, installation, removal, or re-installation cost.

7. Display models are sold "as is". If you have purchased a display model, please be advised that it is sold "as is" and that it is subject to the following warranty exclusions: any exterior or cosmetic damage is non-warrantable; any missing components will be replaced at consumers expense; major handling damage to manifold, valve and ignition system will be serviced at consumer's expense; all other warranty's (standard warranty) will remain in effect.

8. The cost of a service call to diagnose trouble.

9. Under no circumstance should you open the touch pad containment box. This will void all warranties.

EXPLODED PARTS DIAGRAM

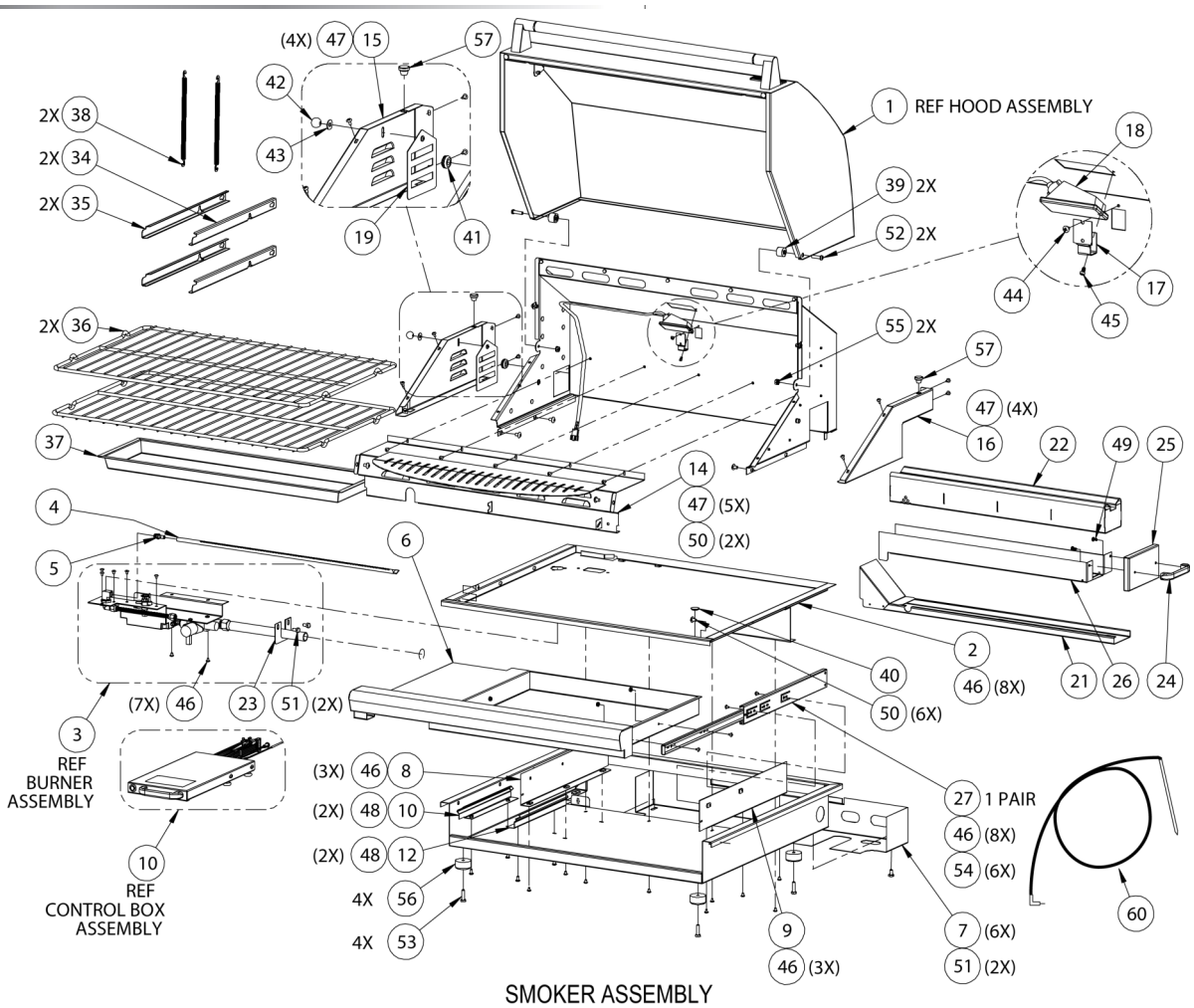

SMOKER ASSEMBLY

	NO.	P/N	DESCRIPTION	QTY.
	1	81051	FRONT HOOD ASSY.	1
	2	70496	PAN, BOTTOM, WLDMT	1
	3	REF	BURNER, SMOKER, ASSY	1
	4	35882	GAS BURNER, STRAIGHT	1
	5	35946	ORIFICE, #54	1
	6	81048	BULLNOSE TRAY ASSY	1
	7	35887	COVER, ACCESS	1
	8	70493	SUPPORT, SLIDE, WLDMT	1
	9	70535	SUPPORT, SLIDE, RH, WLDMT	1
	10	REF	CONTROL BOX, ASSY	1
	11	35876	SUPPORT TRACK, LH	1
	12	35877	SUPPORT TRACK, RH	1
	13	70497	REAR HOOD WLDMT	1
	14	70499	SMOKE VENT, WLDMT	1
	15	70501	SUPPORT WALL, LH, WLDMT	1
	16	35909	SUPPORT WALL, RH	1
	17	35914	TC CLIP	1
	18	80446	SINGLE LIGHT ASSEMBLY	1
	19	70529	SHUTTER PLATE, WLDMT	1
	20	35489	CABLE, EXTENSION, ANTENNA, 6.5 FT	2
	21	70492	AIR CHANNEL, WLDMT	1
	22	70498	CHIP TRAY, WLDMT	1
	23	36011	HANGER PLATE	1
	24	31379	HANDLE, 4" STAINLESS	1
	25	35896	SMOKE DOOR	1
	26	35897	SMOKER TRAY	1
	27	34554	DRAWER SLIDE, 16", SELF CLOSE	1
#	28	81067	WIRE HARNESS, LIGHT EXT., 36"	1
#	29	81057	WIRE HARNESS, POWER IN	1
#	30	81063	WIRE HARNESS, CONT TO MODULE	1
#	31	81065	WIRE HARNESS, TEMP PROBE, 52"	1
#	32	81066	WIRE HARNESS, THERMOCOUPLE	1

	NO.	P/N	DESCRIPTION	QTY.
	33	81068	WIRE HARNESS, PWR, CONT. MODULE	1
	34	35912	TRAY SUPPORT RAIL, RH	2
	35	35913	TRAY SUPPORT RAIL, LH	2
	36	34789	RACK, WIRE	2
	37	35959	TRAY, BASTING	1
	38	31874	EXTENSION SPRING W/HOOKS	2
	39	32642	SPACER, HOOD 5/8" GE	2
	40	30666	HOLE PLUG 3/4	1
	41	33512	GROMMET, RBR, 3/8 I.D. X 5/8 O.D.	1
	42	33686	BALL, KNOB (11/16)	1
	43	14044	WASHER, 1/4, FLT, SS, 11/16 O.D.	5
	44	34035	SCREW, #6-32 X 1/4, THP, SS	1
	45	30617	SCREW, #6-32 X 1/4, FIP, STEEL	1
	46	32389	SCREW, #8-32 X 1/4, THP, SS	25
	47	14014	SCREW, #8-32 X 3/8, THP, SS	13
	48	33706	SCREW, #10-32 X 3/8, PHP, SS	4
	49	14050	SCREW, #10-24 X 3/8, PHP, SS	2
	50	14012	SCREW, 1/4-20 X 3/8, THP, STEEL	8
	51	14030	SCREW, 1/4-20 X 1/2, HHD, SS	4
	52	14013	SCREW, 1/4-20 X 1, BHS, STEEL	2
	53	14029	SCREW, 1/4-20 X 1, HHD, SS	4
	54	14024	NUT, # 8-32, LKN, ST	6
	55	31876	NUT, 1/4-20, LKN, STEEL, W/ESL	2
	56	34374	RUBBER BUMPER, .75 HIGH	4
	57	32470	BUMPER, 3/4 , RUBBER, PRESS IN	2
*	58	34552	ANTENNA, REPLACEMENT	1
*	59	31935	WEATHER STRIPPING, 3/8"	3.75
	60	35553	PROBE, TEMP, FOOD	1

* NOT SHOWN
# REFERENCE NEXT ASSEMBLY

EXPLODED PARTS DIAGRAM...continued

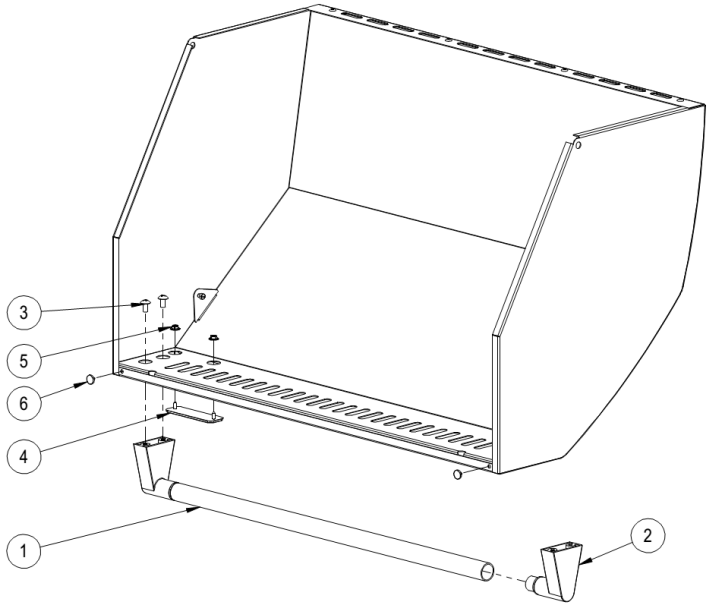

HOOD COMPONENTS

NO.	P/N	DESCRIPTION	QTY.
1	32522	HOOD HANDLE, L30	1
2	31736	END CAP, HOOD HANDLE, W/INSUL	2
3	30290	SCREW, 1/4-20 X 1/2, THP, STEEL	4
4	L11074	LYNX LOGO	1
5	31062	NUT, 1/8, SPEED, STEEL, SELF THREADING	2
6	32477	BUMPER, 1/2" DIA, RUBBER, PRESS IN	2

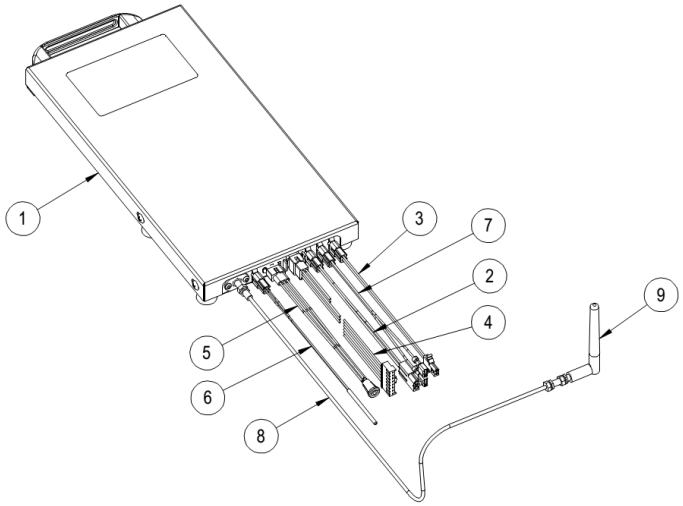

CONTROL BOX ASSEMBLY

NO.	P/N	DESCRIPTION	QTY
1	81047	CONTROL BOX, ASSY	1
2	81067	WIRE HARNESS, LIGHT EXT., 36"	1
3	81057	WIRE HARNESS, POWER IN	1
4	81063	WIRE HARNESS, CONT TO MODULE	1
5	81065	WIRE HARNESS, TEMP PROBE, 52"	1
6	81066	WIRE HARNESS, THERMOCOUPLE	1
7	81068	WIRE HARNESS, PWR, CONT. MODULE	1
8	35489	CABLE, EXTENSION, ANTENNA, 6.5 FT	1
9	34552	ANTENNA, REPLACEMENT	1

EXPLODED PARTS DIAGRAM...continued

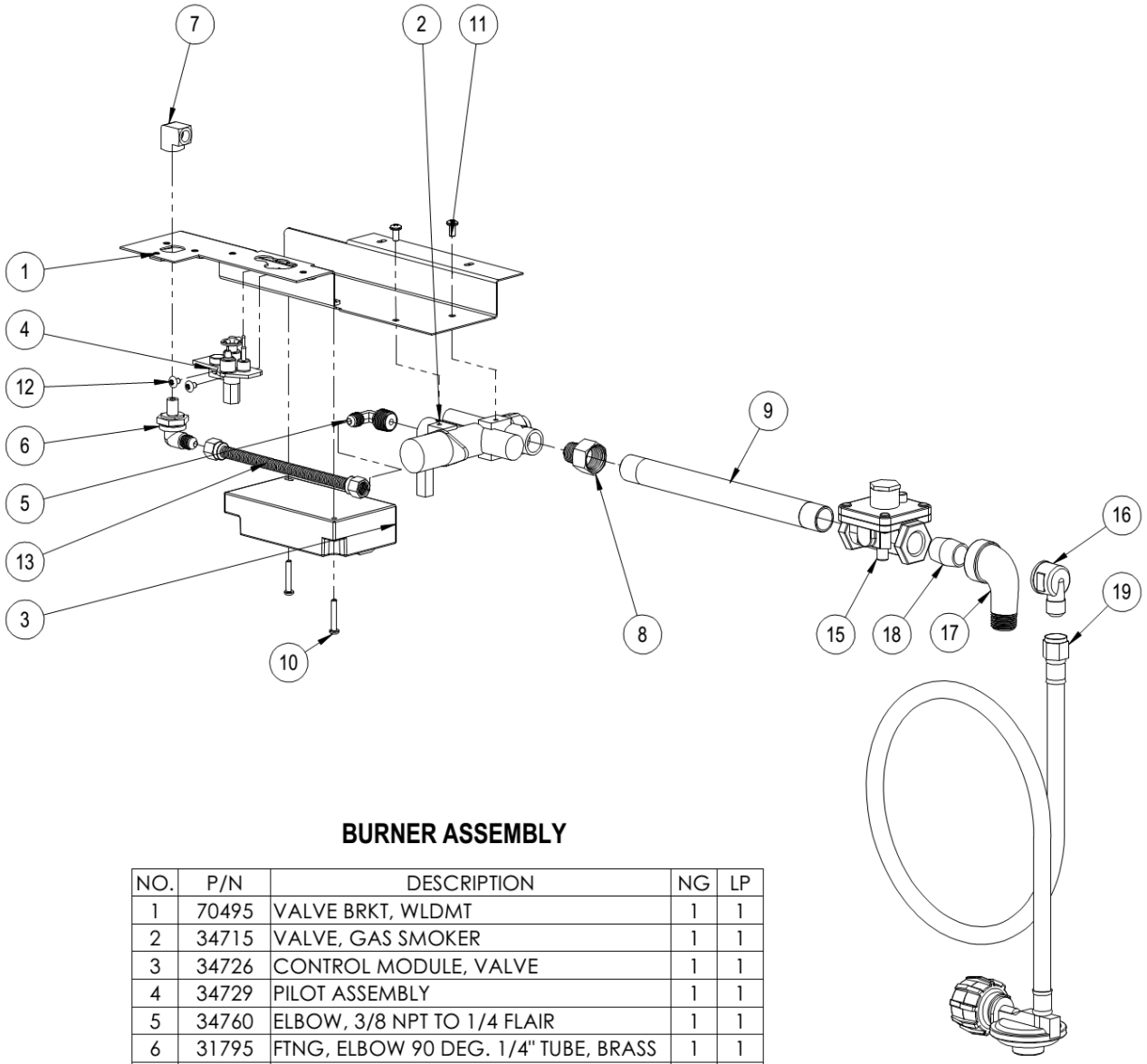

BURNER ASSEMBLY

NO.	P/N	DESCRIPTION	NG	LP
1	70495	VALVE BRKT, WLDMT	1	1
2	34715	VALVE, GAS SMOKER	1	1
3	34726	CONTROL MODULE, VALVE	1	1
4	34729	PILOT ASSEMBLY	1	1
5	34760	ELBOW, 3/8 NPT TO 1/4 FLAIR	1	1
6	31795	FTNG, ELBOW 90 DEG. 1/4" TUBE, BRASS	1	1
7	35114	FTNG, ELB, 90, 1/8 FNPT, FEM	1	1
8	34756	FTNG, ADAP, 3/8 NPT TO 1/2 NPT	1	1
9	34765	NIPPLE, PIPE, 1/2 NPT X 9	1	1
10	32469	SCREW, #8-32 X 1, THP, SS	2	2
11	33706	SCREW, #10-32 X 3/8, PHP, SS	2	2
12	32389	SCREW, #8-32 X 1/4, THP, SS	2	2
13	35222	FLEX TUBE, 1/4" X 7" LG , SS	1	1
14	34744	V-WIRE, 24"	1	1
15	30781	REGULATOR, 4/11	1	
16	13054	ELBOW, 3/8" FLARE TO 1/2" FIP		1
17	13010	ELBOW, PIPE, FEM X MALE, 1/2 NPT, 90 DEG	1	
18	13012	NIPPLE, PIPE, 1/2 NPT X 1 1/4"	1	
19	13026	LP REGULATOR W/36" HOSE		1

MODEL-SPECIFIC BUT OUTPUTS AND MAX. RUNS FOR SMOKER

MODEL-SPECIFIC BTU OUTPUTS		
MODEL	BURNER	TOTAL INPUT
LSMK	1 @ 10,000	10,000 Btu/Hr

MAXIMUM RUNS FOR ALL APPLIANCES ON SUPPLY LINE	
Run Length 3/4" Pipe (in feet)	Max BTU for all Appliances on line
10	360,000
20	245,000
30	198,000
40	169,000
50	150,000
60	135,000
70	123,000
80	115,000

NOTE: IF A 1/2 INCH LINE IS USED WITH NATURAL GAS IT SHOULD BE NO LONGER THAN 12 FEET.

INDEX

#

4/11 Regulator 14

B

Before Each Use 21
Before You Start 10
BTU Outputs, Model Specific 31

C

Checklist Before Each Use 21
Cleaning Your Sonoma Smoker by Lynx™ 23
Clearance to Combustibles 11
Contacting LYNX 26
Cut-out Dim., Built-in Grills 13

D

Damage:
- Concealed 10
- Visible 10

Downloading Your Sonoma Smoker by Lynx™ App 20

E

Electrical Connections 16
Exploded Parts View 28

F

Final Checks 18

G

Gas Connections 14
Gas Requirements 14
Gas Supply Line Runs 31

I

Important Safety Precautions 8

L

Leak Test Procedure 18
Lighting Your Grill 21
LP Cylinder Requirements 15
LP Gas 16

M

Maximum Runs for all appliances on supply line 31
Message from Lynx 7

N

Natural Gas 14

O

Obtaining Service from LYNX 26

P

Parts List 29
Parts View, Exploded 28
Pre-Grill Checklist 21
Purging the Gas Line 16

R

Recipe Database 22
Regulator Conversion 14

S

Service, contacting LYNX 26

T

Technical Assistance 26
Troubleshooting 24

U

Unpacking 10

W

Warranty 27

The best outdoor kitchen products come from:

Lynx Grills, Inc.
7300 Flores Street
Downey, CA 90242

For more information please call,
1-888-289-5969 or visit **www.lynxgrills.com**

2016 ©Lynx Grills

MADE IN USA

P/N 35948