HOME SOLUTIONS - COOKING

LRGN6321Y

6.3 cu. ft. Gas Single Smart Oven Range with Air Fry True Convection & New Handle & Button Knob

KEY FEATURES

- 6.3 cu. ft Capacity
- Fan Convection® with Air Fry
- EasyClean®
- WideView™ Window
- LG ThinQ® with ThinQ Care
- Storage Drawer

AVAILABLE COLORS

STAINLESS STEEL

SMART APPLIANCE

ThinQ Care

Proactive Smart Alerts to Keep Your Appliances Running Smoothly

- Preventative Alerts help you stay a step ahead of potential issues to find proactive solutions before problems arise.
- Avoid preventable repairs and service calls with real-time diagnostics for a hassle-free experience.
- Integrated within LG's ThinQ app—a smart home hub for managing your smart devices and appliances.

PRODUCT FEATURES

SUMMARY	
Type	Gas Single Oven
Total Oven Capacity (cu. ft.)	6.3
Available Colors	Stainless Steel,
CAPACITY	
Oven Capacity (cu.ft.)	6.3
Storage Drawer Capacity (cu.ft.)	0.8 (No Handle)
COOKTOP	
Burner/BTU - Left Rear	9100/ 9100
Burner/BTU - Right Rear	5000/ 5000
Burner/BTU - Left Front	12000/ 10000
Burner/BTU - Right Front	17000 / 12000 (SuperBoil™)
Center (Warming Zone) (BTU)	-
Burner Simmer /BTU - Left Rear	1270
Burner Simmer /BTU - Right Rear	670
Burner Simmer /BTU - Left Front	1270
Burner Simmer /BTU - Right Front	1500
Center (Oval burner)	-
OVEN FEATURES	
Broil Element (BTU)	13500/ 12500 (LNG/LPG)
Bake Element (BTU)	19000/ 17000 (LNG/LPG)
Convection Type	Fan Convection
Oven Modes	Bake, Broil, Conv.Bake, Conv.Roast, Air Fry, EasyClean®, Warm
Oven Control Features	Keypad
Convection Conversion	Yes
EasyClean®	Yes
EasyClean® time	10 mins
Self Clean	No
GoCook Smart Oven Light	1 Light
No. of Rack Positions	7
Door Lock	No
Automatic Safety Shut-Down	After 12 Hours

DRAWER FEATURES	
Type	Storage
Time Control	No
CONTROL FEATURES	
Cooktop Control Type	Front Control Knobs
Flex Control Knob	Yes
Oven Control Type	Keypad
Display	White LED
Language	English
Clock	12hr or 24hr (option)
Kitchen Timer	Yes
Timed Cook	Yes
Temperatureerature Unit of Measure	Fahrenheit / Celsius
Cooking Complete Reminder Volume	Beeper (Hi, Lo, Off)
Certified Sabbath Mode	Yes
SMART FEATURES	
ThinQ® (Wi-Fi Enabled)	Yes
Check & Control	Yes
Voice Control	Google Assistant & Amazon Alexa
Smart Receipe (3rd Party Recipe App)	Sidechef
Proactive Customer Care	Yes
SmartDiagnosis™	Yes
NFC Tag On	No
ACCESSORIES	
Air Fry Tray	No
Standard Rack	Yes (2)
Conversion Kit	Yes

APPEARANCE	
All Available Color	Stainless Steel
Knobs	NI-CR Plated (Weight) Button Knob
Knobs Material	Aluminum/ PC+ABS
Handle	AI Anodizing
Handle Material	Stainless Steel
Handle Type	Bar Type
PrintProof™ Finish	No
Oven Door Feature	WideView™ Window (Smog Glass)
Cooktop Finish	Black Porcelain
POWER/ RATINGS	
Amp Rating at 240V	4.2A (120VAC, 60Hz)
DIMENSIONS/ CLEARANCES/ WEIGHT	
Shipping Weight	175 lbs (TBD)
Product Weight	141 lbs (TBD)
Cabinet Width	30"
Overall Depth - without handle	26 31/31"
Overall Depth - with handle	29 9/32"
Overall Height	46 1/2"
Overall Width	29 7/8
Oven Interior Dimensions (W x H x D)	24 16/19 x 22 1/21 x 20
Height to Cooking Surface	36"
Drawer Dimensions (W x H x D)	22 3/8 " x 4" x 14 11/16"
Carton Dimensions (W x H x D)	32 1/2" x 51" x 30 1/2"
LIMITED WARRANTY	
Parts & Labor	1 Year
UPC CODE	
LRGN6321Y	048231350396

© 2025 LG Electronics USA, Inc. All rights reserved. "LG Life's Good" is a registered trademark of LG Corp. All other product and brand names are trademarks or registered trademarks of their respective owners. Design, features and specifications are subject to change without notice. Non-metric weights and measurements are approximate. Some features may require Internet access. Content and services may vary by product and are subject to change without notice. 09/25/26

LRGN6321Y

DIMENSION / CLEARANCES

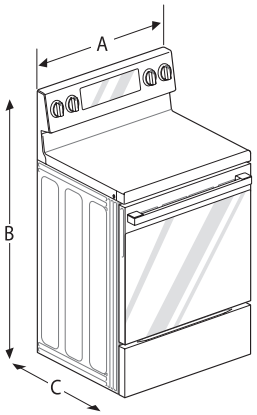

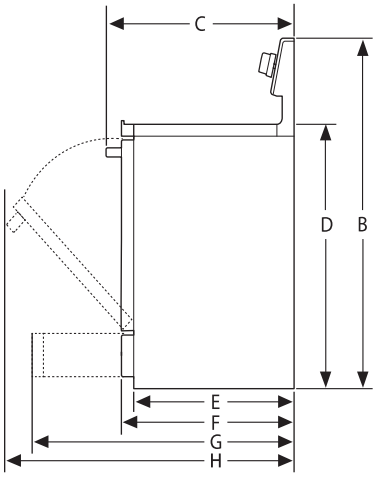

DIMENSIONS		
A	Width	29 31/32" (761 mm)
B	Height	46 1/2" (1182 mm)
C	Depth (Includes Door Handle)	29 9/32" (745 mm)
D	Height (Excludes Controller)	36" (914 mm)
E	Depth (Includes only the product body that is loaded into the cabinet. Excludes door, drawer, and handles)	24 3/4" (629 mm)
F	Depth (Excludes Door Handle)	26 31/32" (685 mm)
G	Depth when drawer is fully opened	36 27/32" (936 mm)
H	Depth when door is fully opened	48 15/32" (1232 mm)

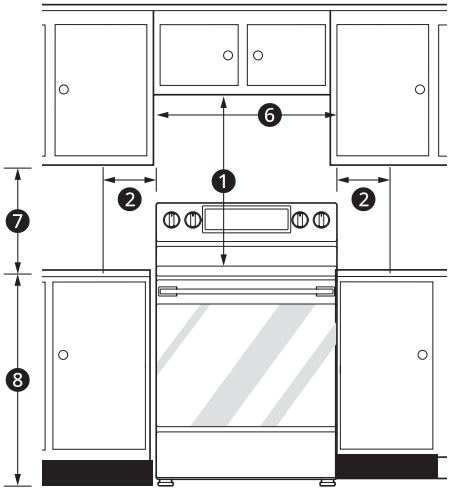

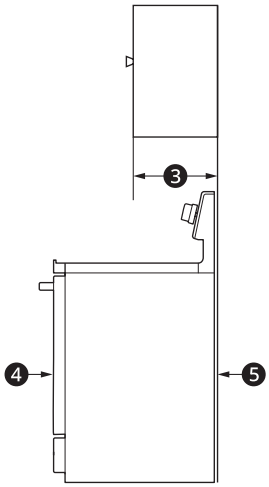

MINIMUM DIMENSIONS		
1	Minimum distance from top of range to combustible surface overhead	30" (76.2 cm)
2	Minimum clearance to left/right wall	5" (12.7 cm)
3	Maximum depth for cabinets above countertops	13" (33.0 cm)
4	Front edge of the range side panel forward from cabinet	2 1/4" (6.3 cm)
5	To cabinets below cooktop and at the range back)	0"
6	Minimum opening in overhead cabinets	30" (76.2 cm)
7	Minimum distance from countertop to overhead cabinets at side	18" (45.7 cm)
8	Height of countertop	36" (91.4 cm)

Gas Pipe and Electrical Outlet Locations

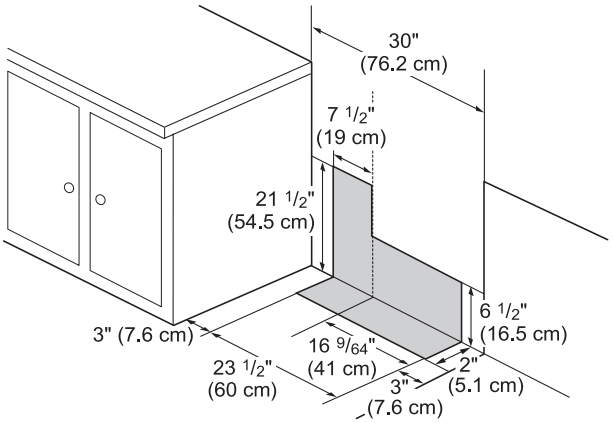

VENTILATION

•Do not locate your range where it may be subject to strong drafts. Any openings in the floor or wall behind the range should be sealed. Make sure the openings around the base of the range that supply fresh air for combustion and ventilation are not blocked by carpeting or woodwork.

• This appliance must not be installed with a ventilation system that blows air downward toward the range. This type of ventilation system may cause ignition and combustion problems with the gas cooking appliance resulting in personal injury or unintended operation.

FLOORING

• Your range, like many other household units, is heavy and can be installed on soft floor coverings such as cushioned vinyl or carpeting. Use care when moving the range on this type of flooring.

• When the floor covering ends at the front of the range, the area that the range will be installed on should be built up with plywood to the same level or higher than the floor covering. This will allow the range to be moved for cleaning and servicing, as well as provide proper air flow to the range.

• Make sure the floor covering can resist temperatures of at least 167 °F (75 °C). See the Installation Safety Instructions included in this manual.

© 2025 LG Electronics USA, Inc. All rights reserved. "LG Life's Good" is a registered trademark of LG Corp. All other product and brand names are trademarks or registered trademarks of their respective owners. Design, features and specifications are subject to change without notice. Non-metric weights and measurements are approximate. Some features may require Internet access. Content and services may vary by product and are subject to change without notice. 1/25