ELKAY®

SPECIFICATIONS

Avado® Single Handle Pull-Down Kitchen Faucet
Model LKLFAV2031

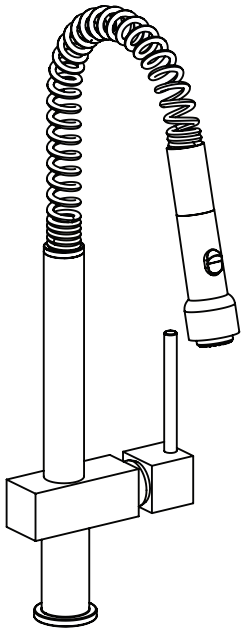

FEATURES
- Single hole top mount installation
  - One 1 1/2" (38mm) faucet hole required
  - Maximum countertop thickness 2.5" (63mm)
- Single-lever faucet
- Pull-down spray with aerated flow and spray function
- Hand spray operation:
  - Press button for spray, press button again for stream
- Braided stainless steel hand spray hose for full pull-down functionality
- Forward-Only handle = No backsplash interference
- Easy-Clean rubberized spray face
- Solid brass construction
- Removable ceramic disc cartridge
- 255° swing spout
- Flexible braided stainless steel supply tubes with 3/8" female compression ends
- Available in the following finishes:
  - Polished Chrome LKLFAV2031CR
  - Satin Nickel LKLFAV2031NK
- Ship weight is 8.8lbs. (4.0Kg)
- Maximum flow rate
  – 1.5 GPM/5.7 L/min at 60 P.S.I.G.

WARRANTY
- Limited Lifetime

ACCESSORIES (Sold Separately)
LKAV3054 - Soap Dispenser

COMPLIES WITH:
- ADA
- ANSI/NSF61
- ASME A112.18.1/CSA B125.1
- CA AB1953/VT S152
- cUPC - Certified

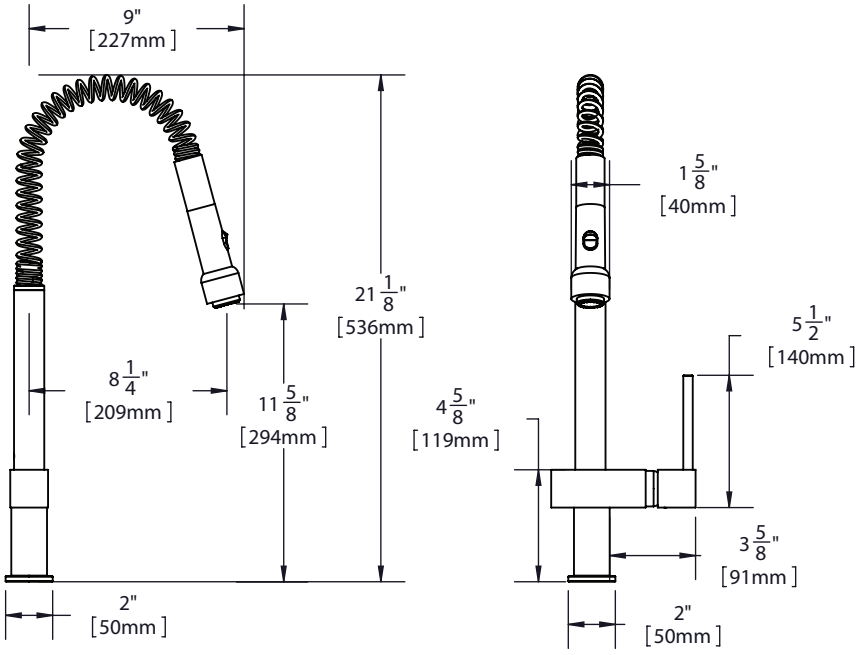

Elkay
elkayusa.com

2222 Camden Court, Oak Brook, IL 60523
1-630-574-8484 Fax: 1-630-574-4509

©2009 Elkay