LG
Life's Good

ENGLISH
FRANÇAIS
ESPAÑOL

AjMadison
Your Appliance Authority™
800-570-3355

INSTALLATION MANUAL

AIR CONDITIONER

- Please read this installation manual completely before installing the product.
- Installation work must be performed in accordance with the national wiring standards by authorized personnel only.
- Please retain this installation manual for future reference after reading it thoroughly.

TYPE : Multi Type

P/NO : MFL39817319

http://www.lghvac.com
www.lg.com

FLEX MULTI SPLIT INSTALLATION INSTRUCTIONS

IMPORTANT!

Please read this instruction sheet completely before installing the product.

This air conditioning system meets strict safety and operating standards. As the installer or service person, it is an important part of your job to install or service the system so it operates safely and efficiently.

⚠ WARNING

- Installation or repairs made by unqualified persons can result in hazards to you and others. Installation MUST comply with local building codes or, in the absence of local codes, with the National Electrical Code NFPA 70/ANSI C1-1993 or current edition and Canadian Electrical Code Part1 CSA C.22.1.
- The information contained in this manual is intended for use by a qualified service technician familiar with safety procedures and equipped with the proper tools and test instruments.
- Failure to carefully read and follow all instructions in this manual can result in equipment malfunction, property damage, personal injury and/or death.

CAUTION: Improper installation, adjustment, alteration, service or maintenance can void the warranty. The weight of the condensing unit requires caution and proper handling procedures when lifting or moving to avoid personal injury. Use care to avoid contact with sharp or pointed edges.

Safety Precautions

- Always wear safety glasses and work gloves when installing equipment.
- Never assume electrical power is disconnected. Check with meter and equipment.
- Keep hands out of fan areas when power is connected to equipment.
- R410A causes frostbite burns.
- R410A is toxic when burned.

NOTE TO INSTALLING DEALER : The Owners Instructions and Warranty are to be given to the owner or prominently displayed near the indoor Air Handler Unit.

⚠ Special warnings

When wiring:

Electrical shock can cause severe personal injury or death. Only a qualified, experienced electrician should attempt to wire this system.

- Do not supply power to the unit until all wiring and tubing are completed or reconnected and checked.
- Highly dangerous electrical voltages are used in this system. Carefully refer to the wiring diagram and these instructions when wiring. Improper connections and inadequate grounding can cause accidental injury or death.
- Ground the unit following local electrical codes.
- Connect all wiring tightly. Loose wiring may cause overheating at connection points and a possible fire hazard.

When transporting:

Be careful when picking up and moving the indoor and outdoor units. Get a partner to help, and bend your knees when lifting to reduce strain on your back. Sharp edges or thin aluminum fins on the air conditioner can cut your fingers.

When installing...

... in a wall: Make sure the wall is strong enough to hold the unit's weight. It may be necessary to construct a strong wood or metal frame to provide added support.

... in a room: Properly insulate any tubing run inside a room to prevent "sweating" that can cause dripping and water damage to wall and floors.

... in moist or uneven locations: Use a raised concrete pad or concrete blocks provide a solid, level foundation for the outdoor unit. This prevents water damage and abnormal vibration.

... in an area with high winds: Securely anchor the outdoor unit down with bolts and a metal frame. Provide a suitable air baffle.

... in a snowy area(for Heat Pump Model): Install the outdoor unit on a raised platform that is higher than drifting snow. Provide snow vents.

When connecting refrigerant tubing

- Keep all tubing runs as short as possible.
- Use the flare method for connecting tubing.
- Check carefully for leaks before starting the test run.

When servicing

- Turn the power OFF at the main power box(mains) before opening the unit to check or repair electrical parts and wiring.
- Keep your fingers and clothing away from any moving parts.
- Clean up the site after you finish, remembering to check that no metal scraps or bits of wiring have been left inside the unit being serviced.

TABLE OF CONTENTS

Installation Requirements

Installation Parts Provided 4
Product Introduction 5
- Indoor Unit 5
- Outdoor Unit 5

Safety Precautions 6
Installation of Indoor, Outdoor Unit 9
- Select the best location 9
- Seaside Applications and Installation 11
- Piping length and elevation 12

Installation 13
- Connecting the piping 13
- How To Fix 17
- Wiring Connection 18
- Conduit connection 18
- Ceiling dimension and hanging bolt location 19
- How to Fix 20
- Wiring Connection 20
- Conduit connection 20
- Installation of wired Remote Controller 22
- Wired remote controller switch information 23
- Trial Operation 24
- Celsius/Fahrenheit Switching 25
- Setting the Central-Control Address 26
- ESP Function 27
- Ceiling dimension and hanging bolt location 28
- Wiring Connection 29
- Conduit connection 29
- Installation of Wired Remote Controller(Optional) 30
- Installation of Decorative Panel 32
- Drain Piping 34

Flaring Work and Connection of Piping 37
- Flaring work 37
- Connection of piping - Outdoor 38

Connecting the Cable between Indoor Unit and Outdoor Unit 39
- Connect the cable to the Indoor unit. 39
- Connect the cable to the Outdoor unit. 40
- Connection method of the connecting cable(Example) ..41

Checking the Drainage, Insulating the Pipe and Special Piping Applications 42
- Insulating the Pipe and Special Piping Applications 42

Long Pipe Setting 43
Air Purging and Evacuation 44
- Leak Checking 44
- Evacuation 45

Charging 46
Combination indoor units 47

Required Tools

- ❑ Level gauge
- ❑ Screw driver
- ❑ Electric drill
- ❑ Hole core drill (ø50mm)

- ❑ Flaring tool set
- ❑ Specified torque wrenches
  1.8kg.m, 4.2kg.m, 5.5kg.m, 6.6kg.m
  (different depending on model No.)
- ❑ Adjustable wrench

- ❑ A glass of water
- ❑ Screw driver

- ❑ Hexagonal wrench(4mm)
- ❑ Refrigerant Gas Leak Detector
- ❑ Vacuum pump
- ❑ Gauge manifold

- ❑ Owner's manual
- ❑ Thermometer
- ❑ Remote Control Holder

AiMadison Your Appliance Authority™ 800-570-3355

Installation Parts Provided

[Standard / Standard Libero / Artcool Mirror]

Type 1	Type 2	Type 3	Type 4
Installation plate	Installation plate	Installation plate	Installation plate
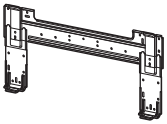	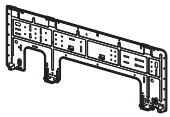		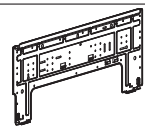
Type "B" screw	Type "B" screw	Type "B" screw / Type "C" screw	Type "B" screw / Type "C" screw
Type "A" screw	Type "A" screw	Type “A” screw	Type “A” screw
Remote control holder	Remote control holder	Remote control holder	Remote control holder

[Cealing Concealed Duct Type]

Name	Clamp metal	Insulation for fitting	Screws for duct flanges	Clamp	Conduit Bracket
Quantity	1 EA	1 set	1 set	8 EA	1 EA
Shape		for gas pipe for liquid pipe		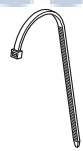	Conduit Bracket Screw(M4) 2EA

AiMadison Your Appliance Authority™ 800-570-3355

[Cealing Cassette Type]

Name	Drain hose	Clamp metal	Washer for hanging backet	Clamp	Conduit Bracket	Insulation for fitting	Remote control holder
Quantity	1 EA	1 EA	8 EA	8 EA	1 EA	1 SET	1 EA
Shape					Conduit Bracket Screw(M4) 2EA	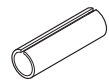 for gas pipe for liquid pipe	

Product Introduction

Here is a brief introduction of the indoor and outdoor units. Please see the information specific to your indoor unit type.

Indoor Unit

[Standard Type]

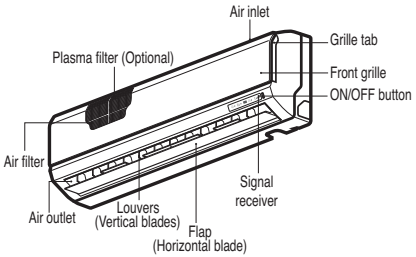

[Artcool Mirror Type]

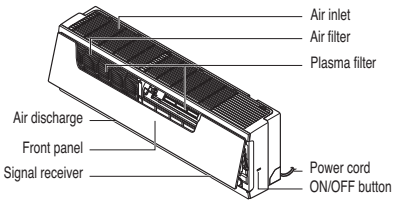

[Standard Libero Type]

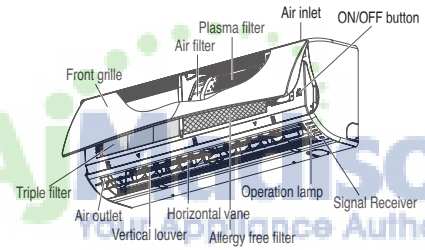

AjMadison
Your Appliance Authority™
800-570-3355

[Cealing Concealed Duct Type]

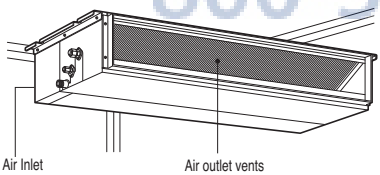

[Ceiling Cassette Type]

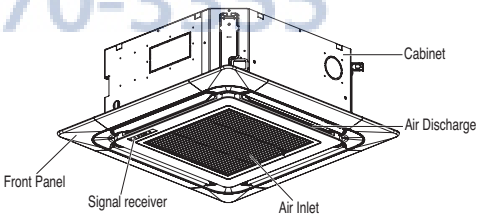

Outdoor Unit

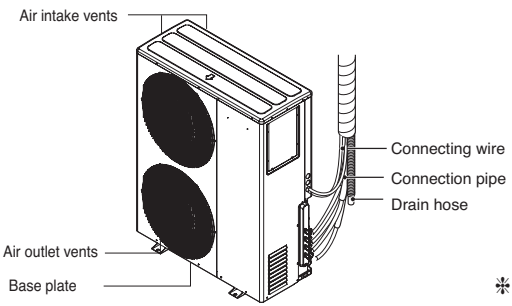

❊ The figure can be changed according to model.

Safety Precautions

To prevent the injury of the user or other people and property damage, the following instructions must be followed.

- Be sure to read before installing the air conditioner.
- Be sure to observe the cautions specified here as they include important items related to safety.
- Incorrect operation due to ignoring instruction will cause harm or damage. The seriousness is classified by the following indications.

⚠WARNING	This symbol indicates the possibility of death or serious injury.
⚠CAUTION	This symbol indicates the possibility of injury or damage to properties only.

- The meanings of the symbols used in this manual are as shown below.

⃠	**Be sure not to do.**
❗	**Be sure to follow the instruction.**

⚠WARNING

■ Installation

Always perform grounding.

- Otherwise, it may cause electrical shock.

Don't use a power cord, a plug or a loose socket which is damaged.

- Otherwise, it may cause a fire or electrical shock.

For installation of the product, always contact the service center or a professional installation agency.

- Otherwise, it may cause a fire, electrical shock, explosion or injury.

Securely attach the electrical part cover to the indoor unit and the service panel to the outdoor unit.

- If the electrical part cover of the indoor unit and the service panel of the outdoor unit are not attached securely, it could result in a fire or electric shock due to dust, water, etc.

Always install an air leakage breaker and a dedicated switching board.

- No installation may cause a fire and electrical shock.

Do not keep or use flammable gases or combustibles near the air conditioner.

- Otherwise, it may cause a fire or the failure of product.

Ensure that an installation frame of the outdoor unit is not damaged due to use for a long time.

- It may cause injury or an accident.

Do not disassemble or repair the product randomly.

- It will cause a fire or electrical shock.

AjMadison Your Appliance Authority 800 570 3355

Do not install the product at a place that there is concern of falling down.

- Otherwise, it may result in personal injury.

Use caution when unpacking and installing.

- Sharp edges may cause injury.

■ Operation

Do not share the outlet with other appliances.

- It will cause an electric shock or a fire due to heat generation.

Do not use the damaged power cord.

- Otherwise, it may cause a fire or electrical shock.

Do not modify or extend the power cord randomly.

- Otherwise, it may cause a fire or electrical shock.

Take care so that the power cord may not be pulled during operation.

- Otherwise, it may cause a fire or electrical shock.

Unplug the unit if strange sounds, smell, or smoke comes from it.

- Otherwise, it may cause electrical shock or a fire.

Keep the flames away.

- Otherwise, it may cause a fire.

Take the power plug out if necessary, holding the head of the plug and do not touch it with wet hands.

- Otherwise, it may cause a fire or electrical shock.

Do not use the power cord near the heating tools.

- Otherwise, it may cause a fire and electrical shock.

Do not open the suction inlet of the indoor/outdoor unit during operation.

- Otherwise, it may electrical shock and failure.

Do not allow water to run into electrical parts.

- Otherwise, it may cause the failure of machine or electrical shock.

Hold the plug by the head when taking it out.

- It may cause electric shock and damage.

Never touch the metal parts of the unit when removing the filter.

- They are sharp and may cause injury.

Do not step on the indoor/outdoor unit and do not put anything on it.

- It may cause an injury through dropping of the unit or falling down.

Do not place a heavy object on the power cord.

- Otherwise, it may cause a fire or electrical shock.

When the product is submerged into water, always contact the service center.

- Otherwise, it may cause a fire or electrical shock.

Take care so that children may not step on the outdoor unit.

- Otherwise, children may be seriously injured due to falling down.

AjMadison Your Appliance Authority 800-570-3355

⚠CAUTION

■ Installation

Install the drain hose to ensure that drain can be securely done.

• Otherwise, it may cause water leakage.

Install the product so that the noise or hot wind from the outdoor unit may not cause any damage to the neighbors.

• Otherwise, it may cause dispute with the neighbors.

Always inspect gas leakage after the installation and repair of product.

• Otherwise, it may cause the failure of product.

Keep level parallel in installing the product.

• Otherwise, it may cause vibration or water leakage.

■ Operation

Avoid excessive cooling and perform ventilation sometimes.

• Otherwise, it may do harm to your health.

Use a soft cloth to clean. Do not use wax, thinner, or a strong detergent.

• The appearance of the air conditioner may deteriorate, change color, or develop surface flaws.

Do not use an appliance for special purposes such as preserving animals vegetables, precision machine, or art articles.

• Otherwise, it may damage your properties.

Do not place obstacles around the flow inlet or outlet.

• Otherwise, it may cause the failure of appliance or an accident.

AjMadison
Your Appliance Authority™
800-570-3355

Installation of Indoor, Outdoor Unit

Read completely, then follow step by step.

Select the best location

Indoor unit

1. Do not have any heat or steam near the unit.
2. Select a place where there are no obstacles in front of the unit.
3. Make sure that condensation drainage can be conveniently routed away.
4. Do not install near a doorway.
5. Ensure the unit is unobstructed, allow proper space on all sides according to the arrows and distance measurements in the figures.
6. Use a Metal Detector or Metal Scanner to locate studs to prevent unnecessary damage to the wall.

[Standard/Standard Libero/Artcool Mirror Type]

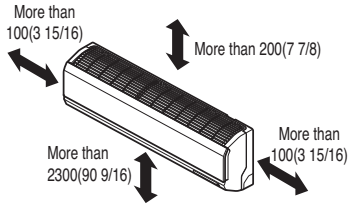

Unit:mm(inch)

[Cealing Concealed Duct Type]

Top view

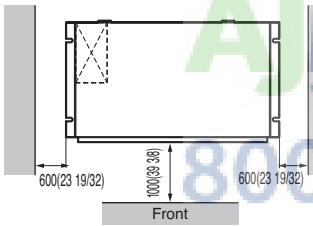

Front view

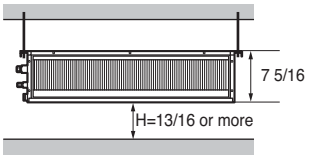

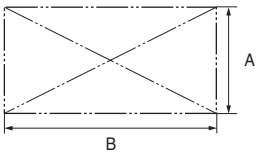

[Cealing Cassette Type]

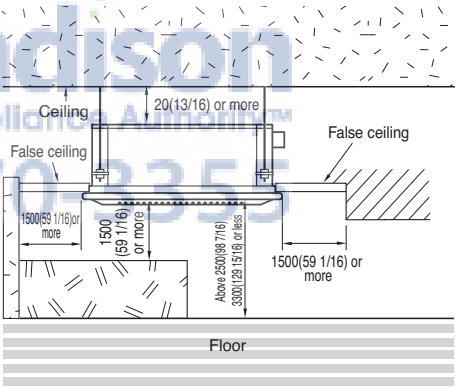

Capacity(Btu/h class)	A	B
9/12k	600(23 5/8)	900(35 15/32)
18k	600(23 5/8)	1100(43 5/16)

Unit:mm(inch)

AjMadison Your Appliance Authority™ 800-570-3355

Outdoor unit

1. If an awning is built over the unit to prevent direct sunlight or rain exposure, make sure that heat radiation from the condenser is not restricted.
2. Ensure the unit is unobstructed, allow proper space on all sides according to the arrows and distance measurements in the figures.
3. Do not place animals and plants in the path of the warm air.
4. Take the air conditioner weight into account and select a place where noise and vibration are minimum.
5. Select a place so that the warm air and sound from the air conditioner does not disturb neighbors.

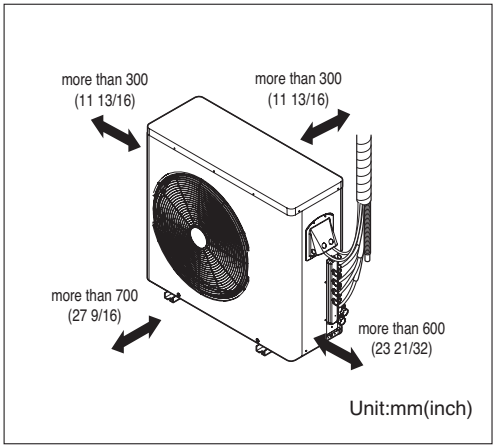

Rooftop Installations:

If the outdoor unit is installed on a roof structure, be sure to level the unit. Ensure the roof structure and anchoring method are adequate for the unit location. Consult local codes regarding rooftop mounting.

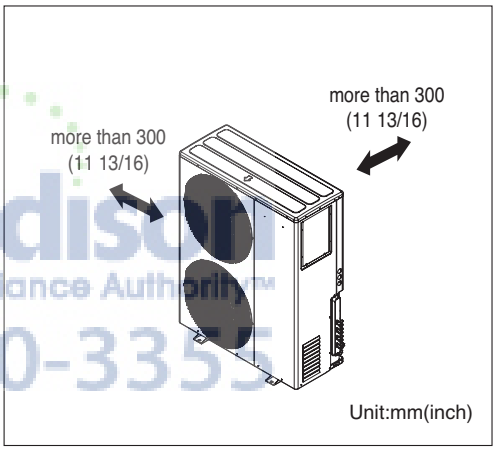

AjMadison
Your Appliance Authority™
800-570-3355

Seaside Applications and Installation

⚠ CAUTION

1. Air conditioners should not be installed in areas where corrosive gases, such as acid or alkaline gas, are produced.
2. Do not install the product where it could be exposed to sea wind (salty wind) directly. It can result corrosion on the product. Corrosion, particularly on the condenser and evaporator fins, could cause product malfunction or inefficient performance.
3. If outdoor unit is installed close to the seaside, it should avoid direct exposure to the sea wind.

1. Selecting the location(Outdoor Unit)

1) If the outdoor unit is to be installed close to the seaside, direct exposure to the sea wind should be avoided. Install the outdoor unit on the opposite side of the sea wind direction.

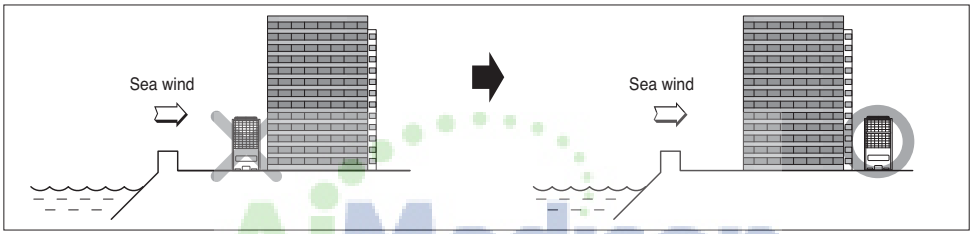

2) In case, to install the outdoor unit on the seaside, set up a windbreaker/barrier, to lessen the unit's exposure to sea air

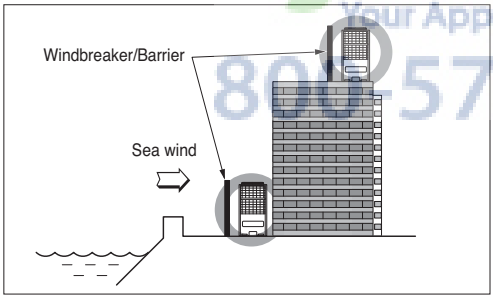

- It should be strong enough (like concrete) to obstruct the wind from the sea.
- The height and width should be more than 150% of the outdoor unit.
- A minimum of 70cm (27 1/16 inches) of space between outdoor unit and the windbreak for easy air flow.

3) Select a well-drained place.

Periodic (more than once/year) cleaning of the dust or salt particles stuck on the heat exchanger using water is recommended.

AjMadison Your Appliance Authority™ 800-570-3355

Piping length and elevation

Multi Piping Type

Unit : m(ft)

Outdoor Unit Capacity (Btu/h class)	Max total length of all pipes (A+B)/(A+B+C)/ (A+B+C+D)	Max length of each pipe (A/B/C/D)	Min length of each pipe (A/B/C/D)	Max Elevation between each indoor unit and outdoor unit (h1)	Max elevation between indoor units (h2)	Max.Combination of Indoor unit (Btu/h class)
18k	50(164)	25(82)	3(10)	15(49)	7.5(25)	24k
24k	75(246)	25(82)	3(10)	15(49)	7.5(25)	33k
36k	75(246)	25(82)	3(10)	15(49)	7.5(25)	48k

Indoor unit Capacity (Btu/h class)	Pipe Diameter Unit : mm(inch)		Standard Pipe Length Unit : m(ft)	Additional Refrigerant Unit : g/m(oz/ft)
	Gas	Liquid		
9k	9.52(3/8)	6.35(1/4)	7.5(25)	20(0.22)
12k	9.52(3/8)	6.35(1/4)	7.5(25)	20(0.22)
18k	12.7(1/2)	6.35(1/4)	7.5(25)	20(0.22)

AjMadison
Your Appliance Authority
800-570-3355

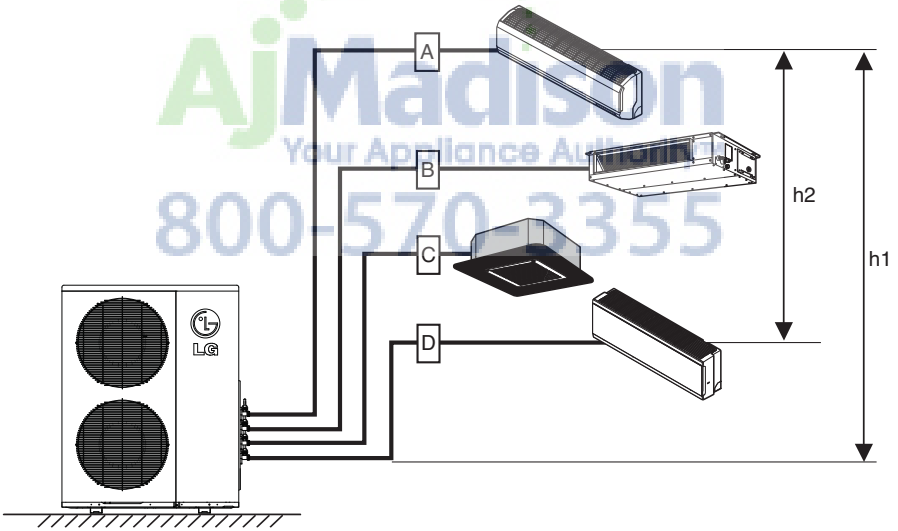

CAUTION: Capacity is based on standard length and maximum allowance length is on the basis of reliability.

Installation

[Standard / Standard Libero / Artcool Mirror Type]

Connecting the piping

Standard / Artcool Mirror Type

1. Prepare the indoor unit's piping and drain hose for installation through the wall.
2. Remove the plastic tubing retainer(see the illustration on the right) and pull the tubing and drain hose away from chassis.
3. Route the indoor tubing and the drain hose to the required piping hole position.
4. Insert the piping, drain hose, and the connecting cable into the piping hole.
5. Insert the connecting cable into the indoor unit.
   - Don't connect the cable to the indoor unit.
   - Make a small loop with the cable for easy connection later.
6. Tape the tubing and drain hose.

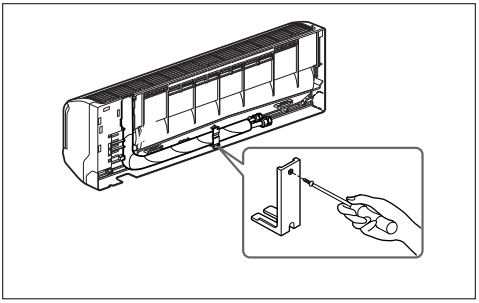

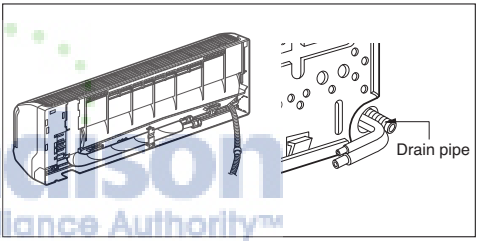

AjMadison
Your Appliance Authority™
800-570-3355

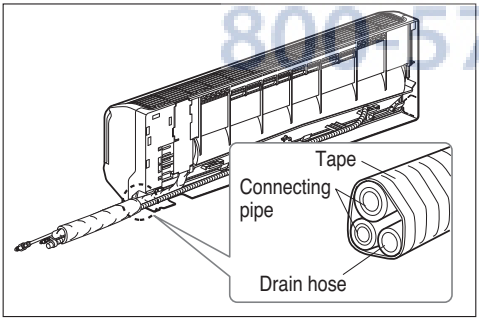

For right rear piping

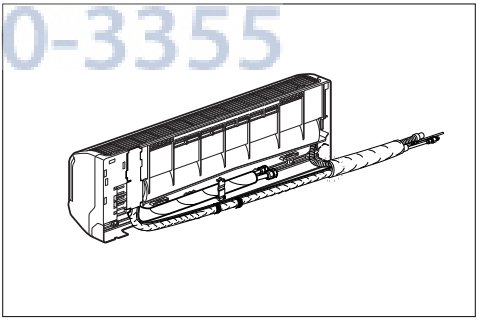

For left rear piping

7. Indoor unit installation
   - Hang the indoor unit from the hooks at the top of the installation plate.
   - Insert the spacer etc. between the indoor unit and the installation plate and separate the bottom of the indoor unit from the wall.

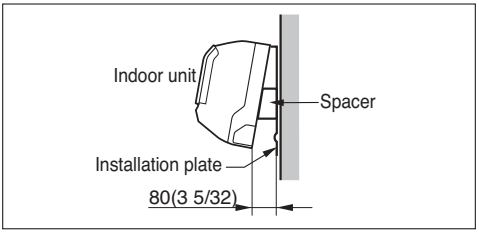

Standard Libero Type

1. Pull the screw cap at the bottom of the indoor unit
2. Remove the chassis cover from the unit by loosing screws

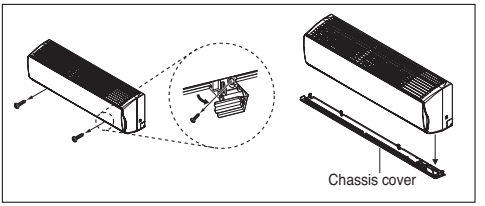

3. Pull back the tubing holder.

4. Remove pipe port cover and positioning the tubing

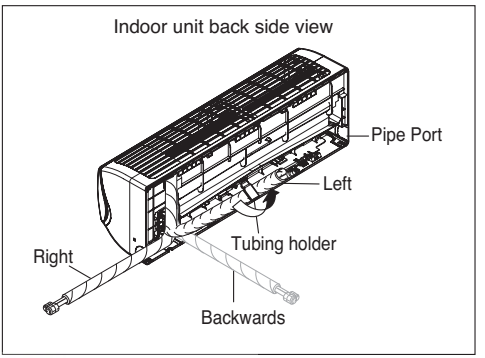

5. Indoor unit installation
   1) Hook the indoor unit onto the upper portion of the installation plate.(engage the three hooks at the top of the indoor unit with the upper edge of the installation plate) Ensure that the hooks are properly seated on the installation plate by moving it left and right
   2) Unlock the tubing holder from the chassis and mount between the chassis and installation plate in order to separate the bottom side of the indoor unit from the wall

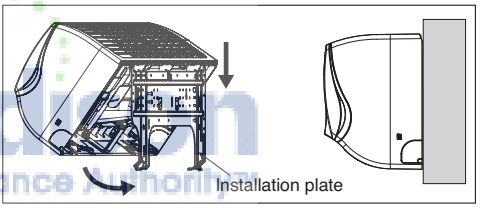

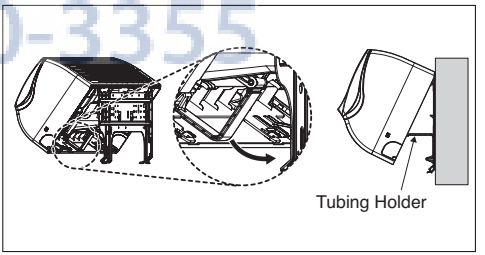

Madison
Appliance Authority
800-570-3355

Connecting the piping to the indoor unit and drain hose to drain pipe.

1. Align the center of the pipes and sufficiently tighten the flare nut by hand.
2. Tighten the flare nut with a wrench.

Outside diameter		Torque
mm	inch	kgf.m (lbf·ft)
Ø6.35	1/4	1.8~2.5 (13~18)
Ø9.52	3/8	3.4~4.2 (24~30)
Ø12.7	1/2	5.5~6.6 (40~48)

3. Next, extend the indoor unit's drain hose. Then attach the drain pipe.

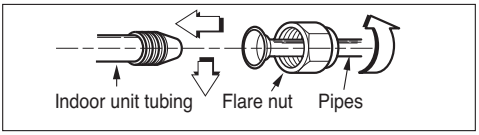

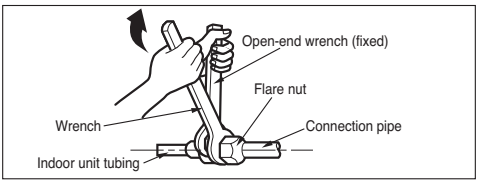

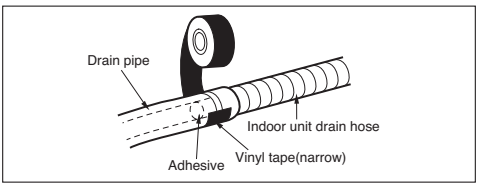

⚠ CAUTION

Installation Information. For left piping. Follow the instruction below.

Good case

• Press on the upper side of clamp and unfold the tubing to slowly downward.

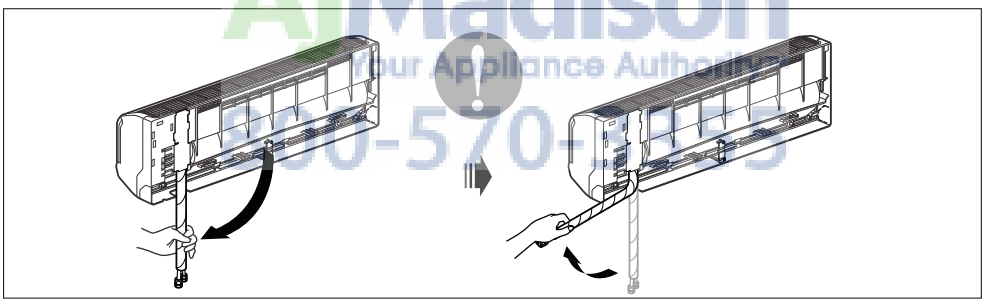

Bad case

• Bending the pipe from right to left may cause damage to the tubing.

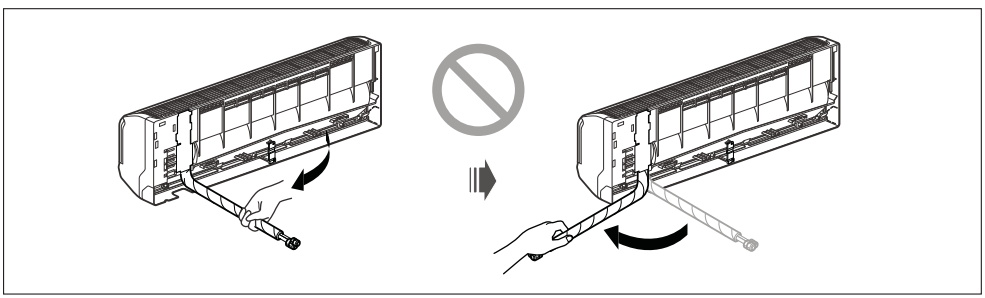

AjMadison
Your Appliance Authority
800-570-1555

Wrap the insulation material around the connecting portion.

1. Overlap the connection pipe insulation and the indoor unit pipe heat insulation material. Bind them together with vinyl tape so that there is no gap.
2. Wrap the area which accommodates the rear piping housing section with vinyl tape.

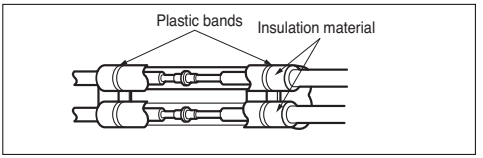

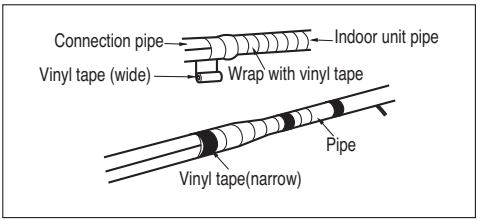

3. Bundle the piping and drain hose together by wrapping them with vinyl tape over the range within which they fit into the rear piping housing section.

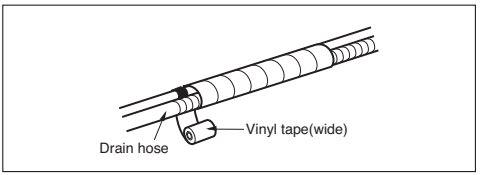

Reroute the pipings and the drain hose across the back of the chassis.

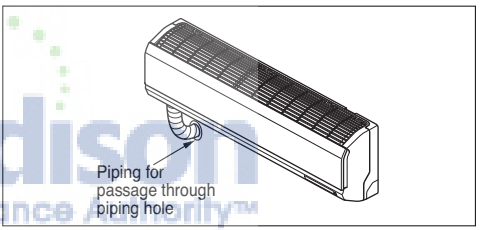

Finishing the indoor unit installation

 # Standard / Artcool Mirror Type

1. Remove the spacer.
2. Ensure that the hooks are properly seated on the installation plate by moving it left and right.
3. Press the lower left and right sides of the unit against the installation plate until the hooks engage into their slots(clicking sound).

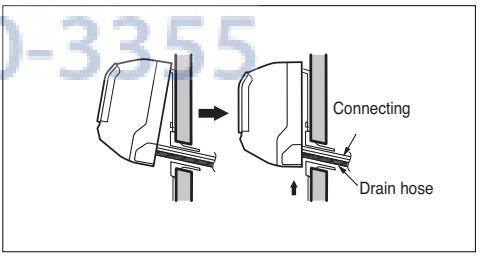

 # Standard Libero Type

1. Mount the tubing holder in the original positon.
2. Ensure that the hooks are properly seated on the installation plate by moving it left and right.
3. Press the lower left and right sides of the unit against the installation plate until the hooks engage into their slots (clicking sound).
4. Finish the assembly by screwing the unit to the installation plate by using two pieces of type "C" screws. And assemble a chassis cover.

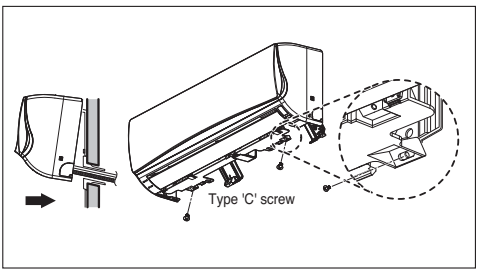

AiMadison
Your Appliance Authority™
800-570-3355

Installation of filters

1) Pull out the triple filter and allergy free filter from the separately packed plastic bag.
2) Insert the triple filter into the left case and insert the allergy free filter into the right case.
3) Detach two attached tapes from the plasma filter.

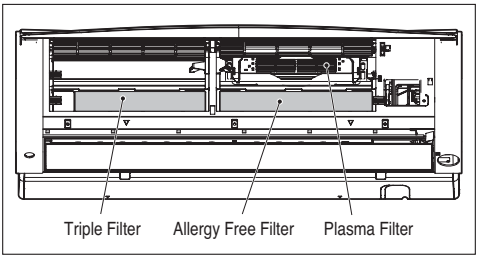

How To Fix

The wall you select should be strong and solid enough to prevent vibration

1. Mount the installation plate on the wall with type "A" screws. If mounting the unit on a concrete wall, use anchor bolts.

• Mount the installation plate horizontally by aligning the centerline using a level.

2. Measure the wall and mark the centerline. It is also important to use caution concerning the location of the installation plate-routing of the wiring to power outlets is through the walls typically. Drilling the hole through the wall for piping connections must be done safely.

Indoor Type	Capacity (kBtu/h)	Type
Standard / Standard Libero / Artcool Mirror	9/12	Type 1 / Type 3
	18	Type 2 / Type 4

AjMadison
Your Appliance Authority
800-570-3355

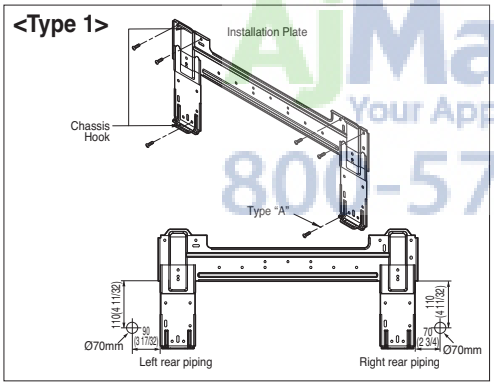

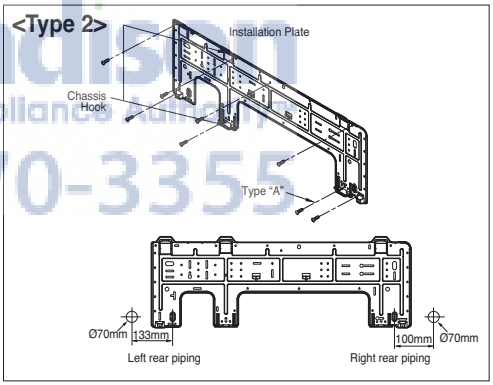

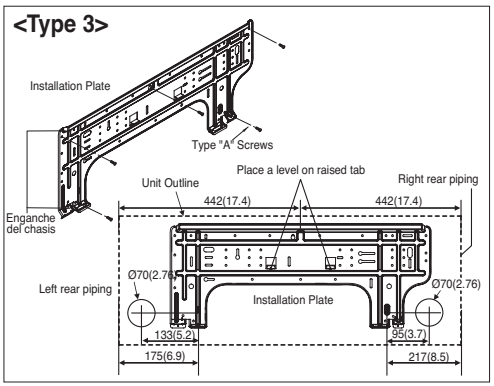

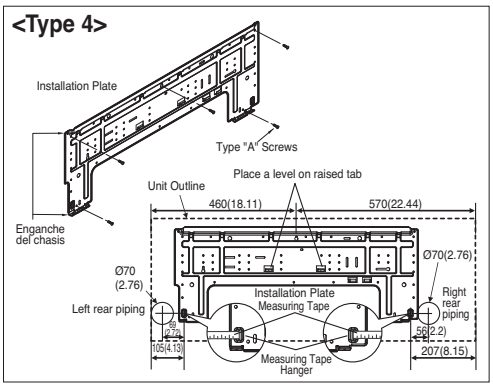

Wiring Connection

1. Connect the wires to the terminals on the control board individually according to the outdoor unit connection.
   - Ensure that the color of the wires of outdoor unit and the terminal No. are the same as those of indoor unit respectively.

Terminal Block in Indoor				
1(L1)	2(L2)	⏚	3	4

Connected to Outdoor Unit

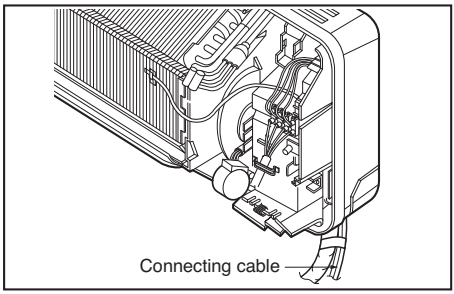

2. Attach the Grille onto the cabinet.
   - Grasp the lower left and right side of the Grille and engage four tabs on the top inside edge of the chassis.
   - Press the Grille toward the chassis until it goes back into place.

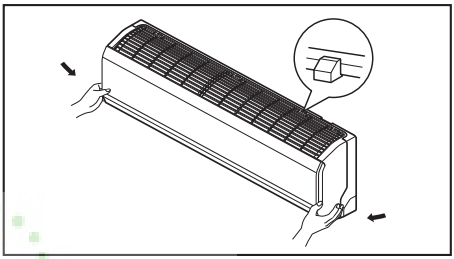

Conduit connection

1. Set the connecting cable into the terminal block of indoor unit, and tighten set screw to lock the conduit bracket to the indoor unit.
2. Join the conduit and the conduit bracket together.

CAUTION : Must use the elbow type (L-Type) conduit.

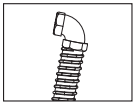

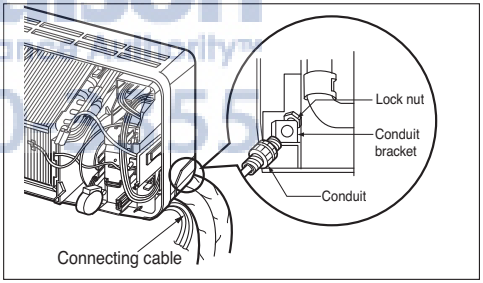

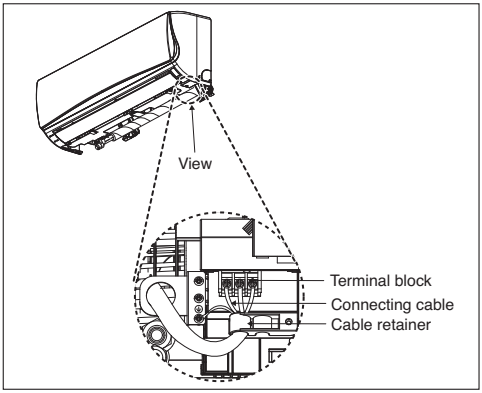

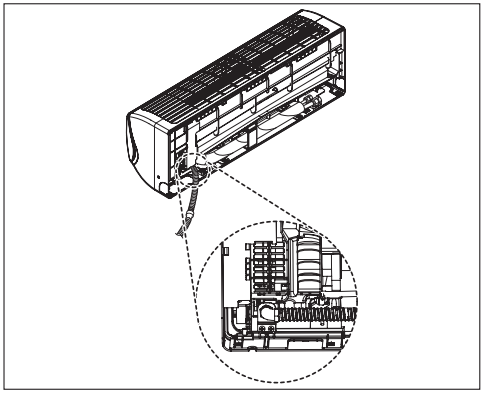

AiMadison Appliance Authority 800-570-1555

[Cealing Concealed Duct Type]

Ceiling dimension and hanging bolt location

Installation of Unit

Install the unit above the ceiling correctly.

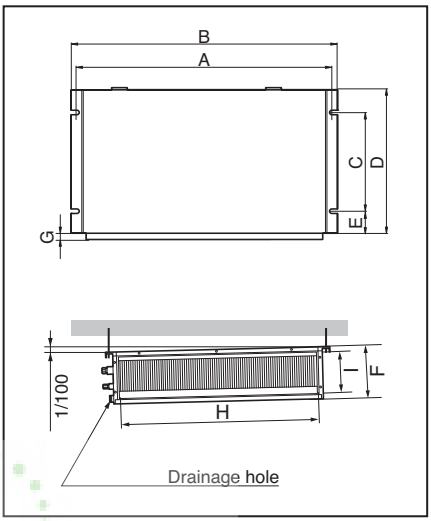

CASE 1

POSITION OF SUSPENSION BOLT

- Apply a joint-canvas between the unit and duct to absorb unnecessary vibration.
- Apply a filter Accessory at air return hole.

Unit:mm(inch)

Dimension / Capacity Btu/h class	A	B	C	D	E	F	G	H	I
9/12k	850 (33 15/32)	900 (35 15/32)	383 (15 3/32)	570 (22 7/16)	93.5 (3 11/16)	190 (7 1/2)	20.6 (13/16)	795 (31 5/16)	163 (6 13/32)
18k	1130 (44 1/2)	1180 (46 1/2)	383 (15 3/32)	570 (22 7/16)	93.5 (3 11/16)	190 (7 1/2)	20.6 (13/16)	1065 (41 15/16)	163 (6 13/32)

AjMadison
Your Appliance Authority™
800-570-3355

CASE 2

- Install the unit leaning to a drainage hole side as a figure for easy water drainage.

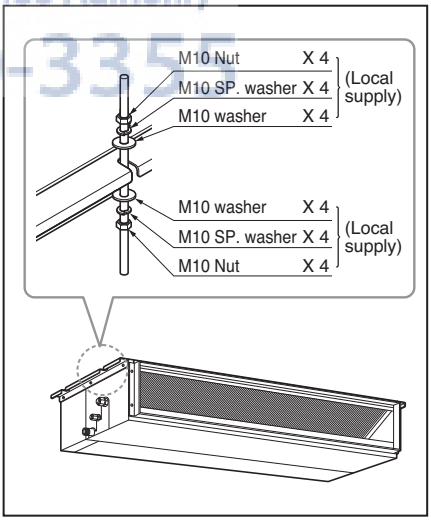

POSITION OF CONSOLE BOLT

- A place where the unit will be leveled and that can support the weight of the unit.
- A place where the unit can withstand its vibration.
- A place where service can be easily performed.

How to Fix

- Select and mark the position for fixing bolts.
- Drill the hole for set anchor on the face of ceiling.

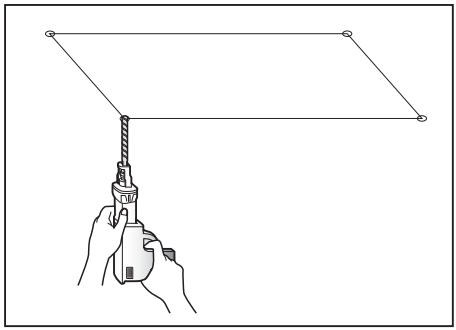

- Insert the set anchor and washer onto the suspension bolts for locking the suspension bolts on the ceiling.
- Mount the suspension bolts to the set anchor firmly.
- Secure the installation plates onto the suspension bolts (adjust level roughly) using nuts, washers and spring washers.

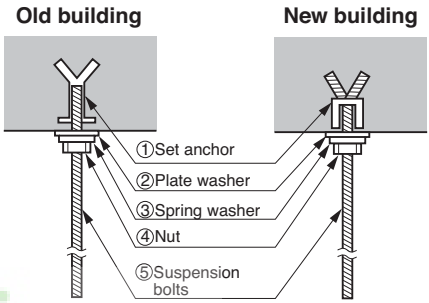

CAUTION : Tighten the nut and bolt to prevent unit falling.

AiMadison
Your Appliance Authority™
866-576-5555

Wiring Connection

Connect the wires to the terminals on the control board individually according to the outdoor unit connection.

- Ensure that the color of the wires of outdoor unit and the terminal No. are the same as those of indoor unit respectively.

B1/B2 Series

Terminal Block of Indoor Unit			
1(L1)	2(L2)	⏚	3

Connected to outdooor unit

Conduit connection

1. Remove the busing rubber product attached on the indoor unit.
2. Set the connecting cable into the terminal block of indoor unit, and tighten set screw to lock the conduit bracket to the indoor unit.
3. Join the conduit and the conduit bracket together.

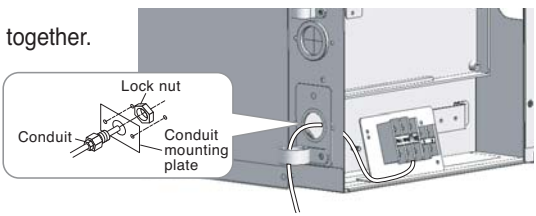

CAUTION

1. Install declination of the indoor unit is very important for the drain of the duct type air conditioner.
2. Minimum thickness of the insulation for the connecting pipe shall be 19mm(1/32 inch).

Front of view

• The unit must be horizontal or declined to the drain hose connected when finished installation.

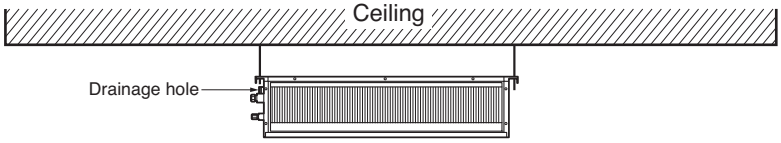

Drain Pump use

INSULATION, OTHERS

Insulate the joint and tubes completely.

THERMAL INSULATION

All thermal insulation must comply with local requirement.

INDOOR UNIT

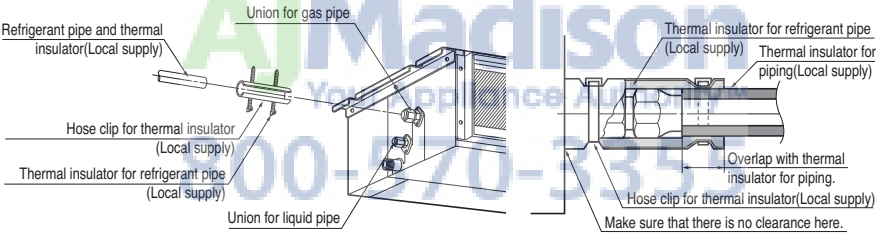

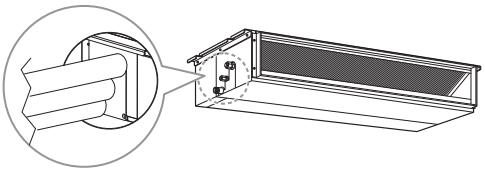

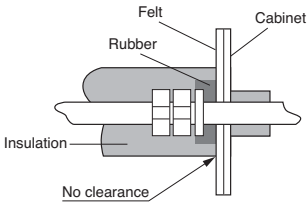

TEST AND CHECK

■ ***After all workings are finished, check the working and operation.***

- Air distribution ..... Is the air circulation good?
- Drain ..... Is the drainage smoothly and no sweating?
- Gas leakage ..... Is the piping connection correctly?
- Wiring ..... Is the wiring connection correctly?
- Lock-bolt ..... Is the lock-bolt of compressor loosened?
- Insulation..... Is the unit fully insulated?
- Ground..... Is the unit safely grounded?

Installation of wired Remote Controller

1 Put the installation paper on the place and determine the position and height of the fixing screws of the wired remote controller.
- Refer to the printed side of the installation paper.

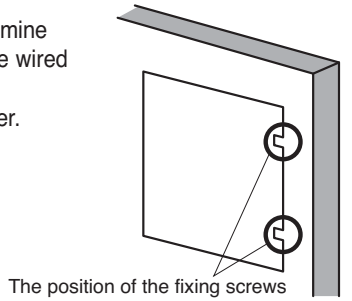

2 Plug the connecting cable into the indoor unit.
- The product is being shipped with the cable connected only to the remote controller. Fix the connecting cable with the cable rack.

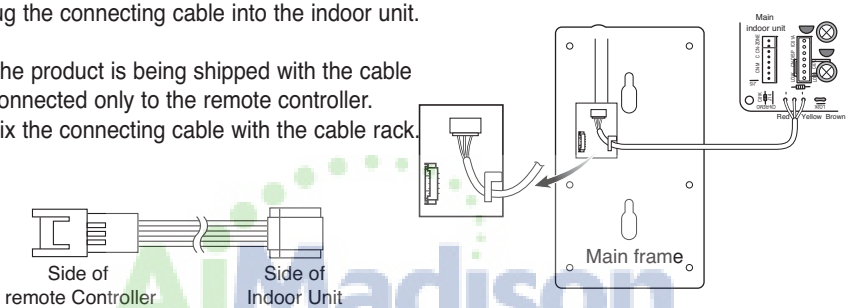

3 Remove the installation paper before installing the remote controller so that it can fit at the right place.

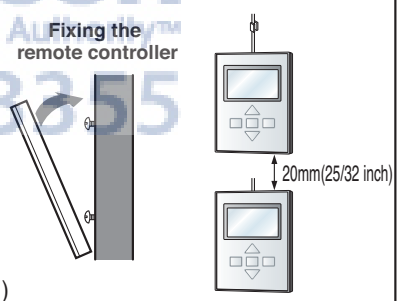

* Do not embed the remote controller into the wall. (It may cause the breakdown of the temperature sensor.)
* If you want to install a number of remote controller at the same place in a vertical line, install them at regular intervals of 20mm(25/32 inch). (It may cause the breakdown of the temperature sensor.)
* Do not install the cable with a distance of 50m(164ft) or longer. (This can cause communication error.)
* When installing the cable, check whether the connector between the remote controller and the product is installed properly. The connector will not be connected when installed in opposite sides.

❑ Supply the power after connecting wired remote controller.

When you need to change wired remote controller, switch off the main power and change it. If the wired remote controller is changed before switching off the main power, the option function of the indoor unit can't be used. (option function like "slo" fan speed selection)

AjMadison Your Appliance Authority™ 800-570-3355

Wired remote controller switch information

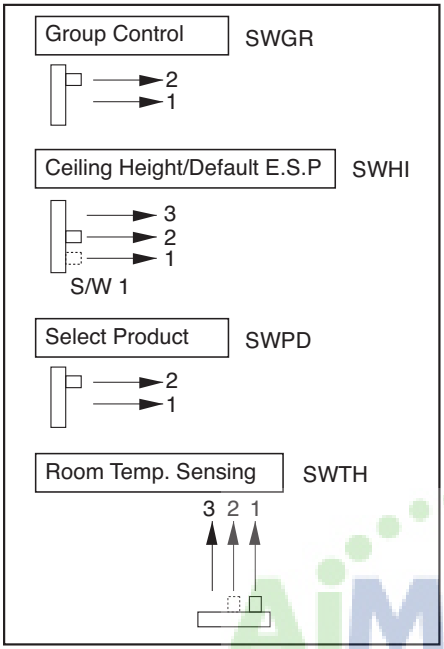

Group control switch

1. For individual control/Master use
2. For group control/Slave use

Ceiling height selection switch

1. Low ceiling
2. Standard ceiling
3. High ceiling

Product selection switch

1. Cooling Only product
2. Heat Pump product

Indoor temperature sensor selection switch

1. Use the temperature sensor on the remote controller.
2. Use the temperature sensor on the product.
3. Use the sensors on the product and remote controller.

AjMadison
Your Appliance Authority™
800-570-3355

- When changing the product selection switch and group control switch, the power must be reconnected to reflect the changes.
- The central control could operate inappropriately depends on indoor unit type, when the remote controller is set as slave.

■ **Necessary functions before using**

Trial Operation

The trial operation is to check the installation status of the product. The temperature will not be controlled during trial operation. Instead the product will operate in several modes such as cooling, strong wind, comp-on.

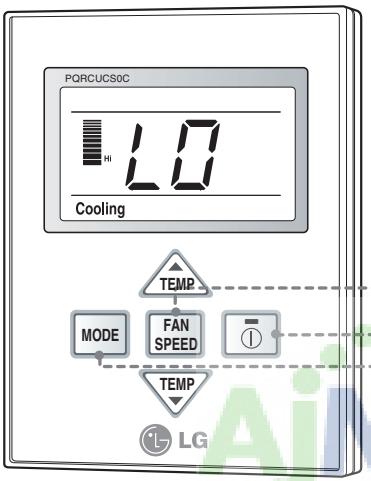

1 If you want to set the trial operation mode, press the mode button and the Fan speed button same time for three seconds.

2 Then the product will begin the trial operation and the display will be like as shown on left side picture.

3 If you want to cancel the trial operation mode, just press the On/Off button.

4 The trail operation will be shut down automatically after 18 minutes and system will go to the standby mode.

AjMadison
Your Appliance Authority
800-570-3355

Celsius/Fahrenheit Switching

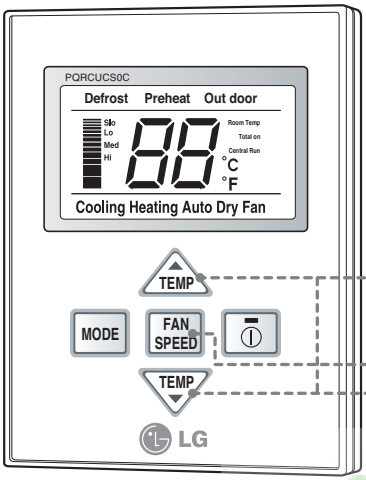

1 If you want to change the temperature unit as the Celsius or Fahrenheit, press the Temperature control button(▼) and the Fan speed button same time for three seconds to enter the setting Mode.

2 Press the temperature control button to change the unit.
Ex) Setting unit as Fahrenheit.

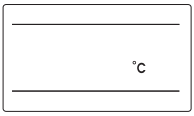

<Setting as Celsius>

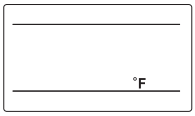

<Setting as Fahrenheit>

3 After setting, press the Temperature control button(▼) and the Fan speed button same time for three seconds to exit the setting Mode.
The system will automatically release without input after 30 seconds.

AjMadison
Your Appliance Authority™
800-570-3355

Setting the Central-Control Address

Please set the address while using the central controller.

You don't need to set address if you don't use central controller.

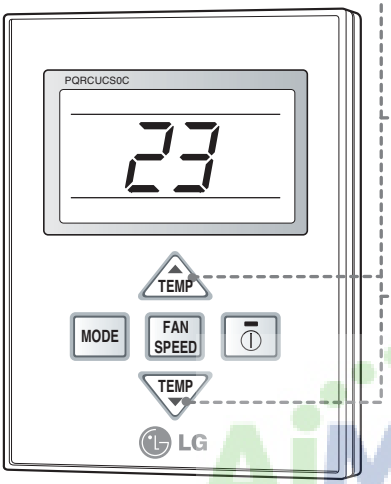

1 If you want to set the address on the display panel, press both temperature control buttons (▲/▼) same time for three seconds.

2 Press the temperature-increasing button to change the group number. Press the temperature-decreasing button to change the indoor unit number.
e.g. As shown on the left side panel, it displays 23.
Group No. : 2
Indoor Unit No. : 3

3 Set the address by pressing both temperature control buttons again(s/t) at the same time for three seconds.

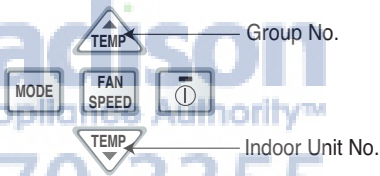

AjMadison
Your Appliance Authority™
800-570-3355

- **If you connect the indoor unit to the central controller, you should set the network address of the indoor unit so that the central controller could recognize it.**
- **The center-control address is composed of the group number and the indoor-unit number.**

Note : The remote controller displays 'HL' if central controller has locked the remote controller .

ESP Function

E.S.P function is setting the volume of each fan speed. It is for the convenience of installation. It is recommended that you should not use this function while using the remote controller.

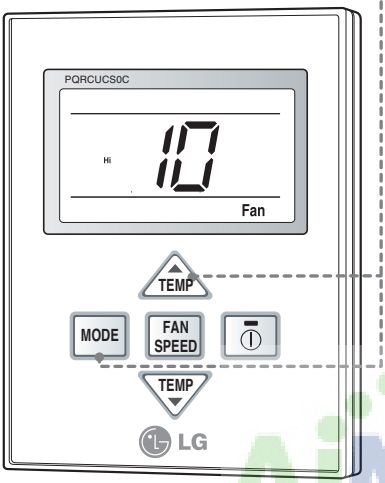

1 Press the mode button and the temperature increasing button(▲) same time for three seconds.

2 Set the volume of each fan speed(Low, Medium, Hi) by using the temperature control button. Press the fan speed button to select the fan speed.
The value of E.S.P can be adjusted from 1 to 255.

3 If you press the On/Off button while setting the ESP function, it will be canceled. (The picture on the left side is the example of setting the Hi wind to ESP 10.)

4 Press the mode button and the temperature increasing button (▲) same time for three seconds. Then the ESP setting will be activated after the temperature display flashes three times.
EX)

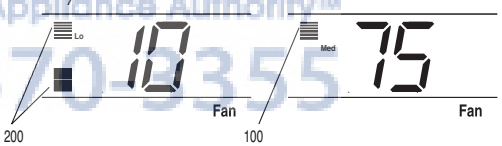

Setting the Low wind to 210 | Setting the Medium wind to 175

❉ The E.S.P value is set at the proper value at the factory. So it is highly recommended that you should not change the E.S.P value at your discretion.

Static pressure(mmAq)		0	1	2	3	4
Model name	Step(H/M/L)	Setting value				
AMNW09GB1A0 [LMDN095HV]	8.5 CMM(300cfm)	75	84	94	104	114
	7.5 CMM(265cfm)	69	77	88	99	110
	6.5 CMM(230cfm)	62	71	83	95	106
AMNW12GB1A0 [LMDN125HV]	9.5 CMM(335cfm)	82	90	99	109	118
	8.5 CMM(300cfm)	75	84	94	104	114
	7.5 CMM(265cfm)	69	77	88	99	110
AMNW18GB2A0 [LMDN185HV]	15 CMM(530cfm)	90	97	105	114	122
	13.5 CMM(477cfm)	82	90	99	109	119
	11.5 CMM(406cfm)	75	84	93	103	114

AjMachine Your Appliance Authority™ 800-570-9355

[Cealing Cassette Type]

Ceiling dimension and hanging bolt location

• The dimensions of the paper model for installation are the same as those of the ceiling opening dimensions.

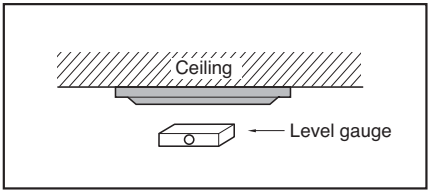

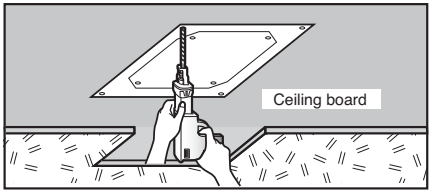

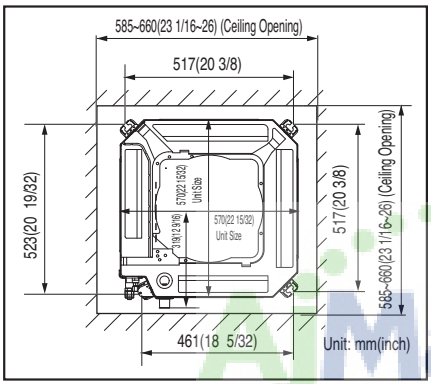

- Select and mark the position for fixing bolts and piping hole.
- Decide the position for fixing bolts slightly tilted to the drain direction after considering the direction of drain hose.
- Drill the hole for anchor bolt on the wall.

AjMadison
Your Appliance Authority™
866.370.3355

CAUTION :

- **This air-conditioner uses a drain pump.**
- **Install the unit horizontally using a level gauge.**
- **During the installation, care should be taken not to damage electric wires.**

NOTICE

• Avoid the following installation location.

1. Such places as restaurants and kitchen where considerable amount of oil steam and flour is generated.
   These may cause heat exchange efficiency reduction, or water drops, drain pump mal-function.
   In these cases, take the following actions;
   - Make sure that ventilation fan is enough to cover all noxious gases from this place.
   - Ensure enough distance from the cooking room to install the air conditioner in such a place where it may not suck oily steam.
2. Avoid installng air conditioner in such places where cooking oil or iron powder is generated.
3. Avoid places where inflammable gas is generated.
4. Avoid place where noxious gas is generated.
5. Avoid places near high frequency generators.

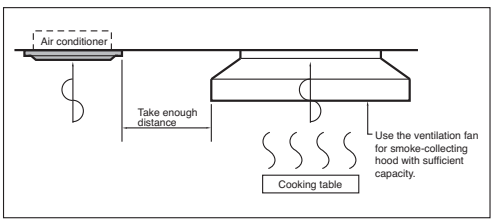

How to Fix

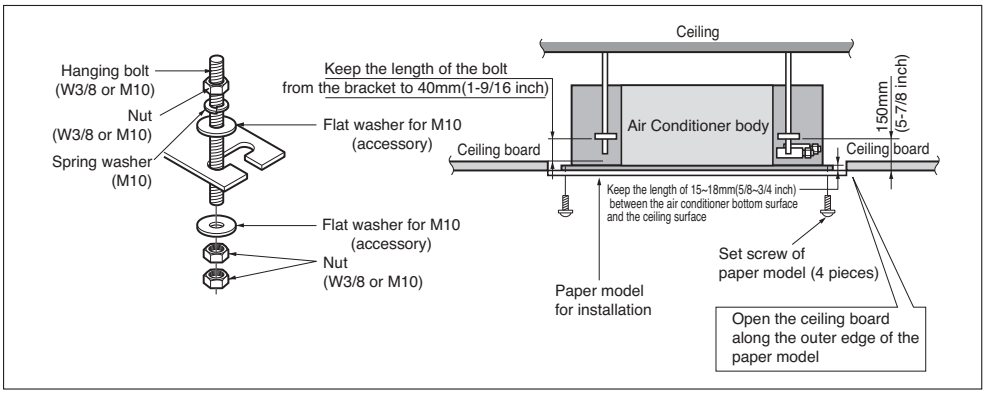

• The following parts are local purchasing.

① Hanging Bolt - W 3/8 or M10
② Nut - W 3/8 or M10
③ Spring Washer - M10
④ Plate Washer - M10

CAUTION : Tighten the nut and bolt to prevent unit from falling off.

Wiring Connection

• Open the control box cover and connect the remote control cord and indoor power wires.

TQ/TR series

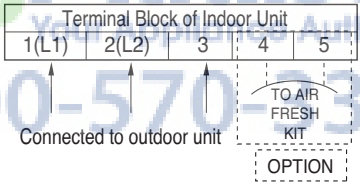

AiMadison
Your Appliance Repair Authority™
800-570-2355

Conduit connection

• Remove the busing rubber product attached on the indoor unit.
• Join the conduit and the conduit bracket together using nut.
• Set the connecting cable into the terminal block of indoor unit, and tighten set screw to lock the conduit bracket to the indoor unit.

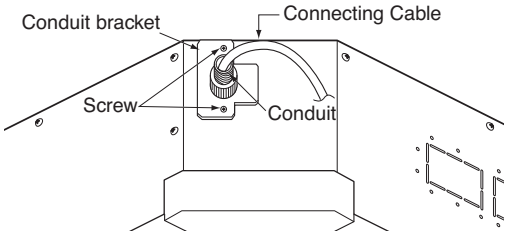

Installation of Wired Remote Controller(Optional)

1. Please fix tightly using provided screw after placing remote controller setup board on the place where you like to setup.

- Please set it up not to bend because poor setup could take place if setup board bends. Please set up remote controller board fit to the reclamation box if there is a reclamation box.
- Install the product so as not to make a gap with the wall side and to prevent shaking after the installation.

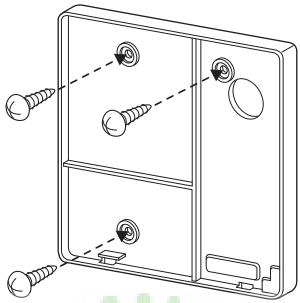

2. Can set up Wired remote controller cable into three directions.

- Setup direction: the surface of wall reclamation, upper, right
- If setting up remote controller cable into upper and right side, please set up after removing remote controller cable guide groove.

❊ Remove guide groove with long nose.

AjMadison
Your Appliance Authority™
800-570-3355

① Reclamation to the surface of the wall

② Upper part guide groove

③ Right part guide groove

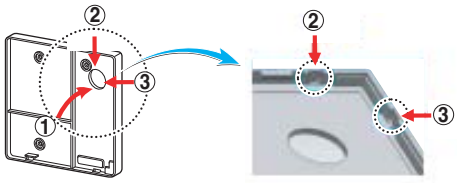

<Wire guide grooves>

3. Please fix remote controller upper part into the setup board attached to the surface of the wall, as the picture below, and then, connect with setup board by pressing lower part.

- Please connect not to make a gap at the remote controller and setup board's upper and lower, right and left part.
- Before assembly with the installation board, arrange the Cable not to interfere with circuit parts.

<Connecting order>

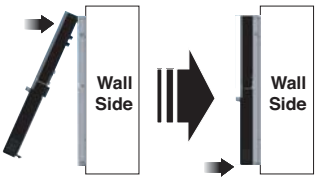

When separating remote controller from setup board, as the picture below, after inserting into the lower separating hole using screw driver and then, spinning clockwise, remote controller is separated.

- There are two separating holes. Please individually separate one at a time.
- Please be careful not to damage the inside components when separating.

<Separating order>

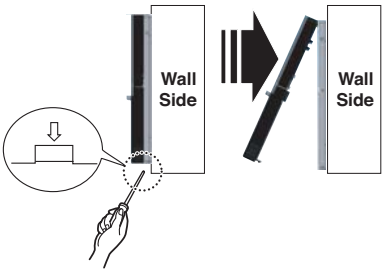

4. Please connect indoor unit and remote controller using connection cable.

12V	Red
Signal	Yellow
GND	Black

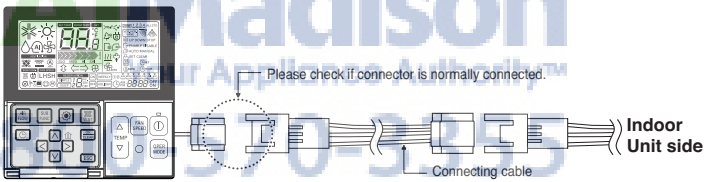

5. Please use extension cable if the distance between wired remote controller and indoor unit is more than 10m.

⚠CAUTION

When installing the wired remote controller, do not bury it in the wall.
(It can cause damage in the temperature sensor.)
Do not install the cable to be 50m or above.
(It can cause communication error.)

- When installing the extension cable, check the connecting direction of the connector of the remote controller side and the product side for correct installation.
- If you install the extension cable in the opposite direction, the connector will not be connected.
- Specification of extension cable: 2547 1007 22# 2 core 3 shield 5 or above.

Installation of Decorative Panel

The decorative panel has its installation direction.
Before installing the decorative panel, always remove the paper template.

1. Remove the packing and take out air inlet grille from front panel.

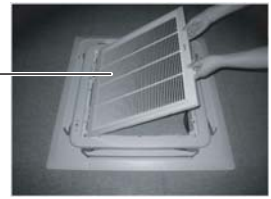

2. Remove the Corner covers of the panel.

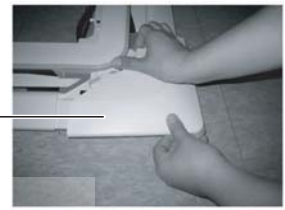

3. Fit the panel on the unit by inserting hooks as shown in picture.

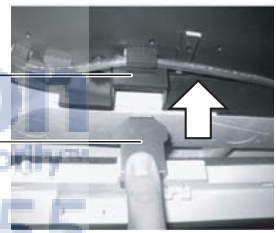

4. Insert two screws on diagonal corners of panel. Do not tighten the bolts completely. (The fixing screws are included in the indoor unit box.)
Check the alignment of panel with the ceiling. Height can be adjusted using hanging bolts as shown in picture. Insert the other two screws and tighten all screws completely.

AJMadison
Your Appliance Authority
800-570-3355

5. Fit the corner covers.

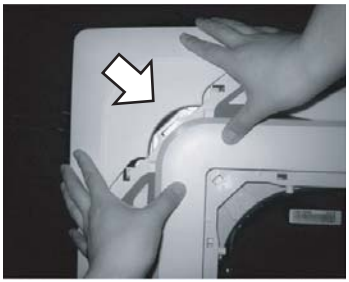

6. Open two screws of control panel cover.

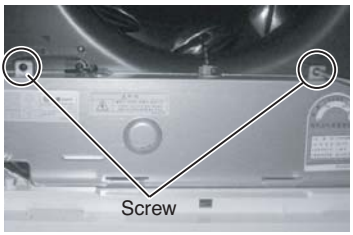

7. Connect one display connector and two vane control connectors of front panel to indoor unit PCB.
   The position marking on PCB is as:
   Display connector : CN-DISPLAY
   Vane control connector: CN-VANE 1,2

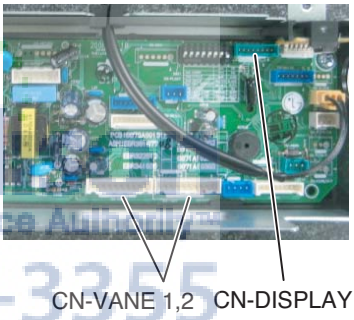

Your Appliance Authority
800-570-3355

8. Close the cover for control box.

9. Install the air inlet grille and Filter on the panel.

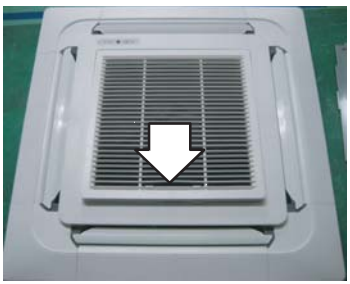

CAUTION: Install certainly the decorative panel.
Cool air leakage causes sweating. ⇨ Water drops fall.

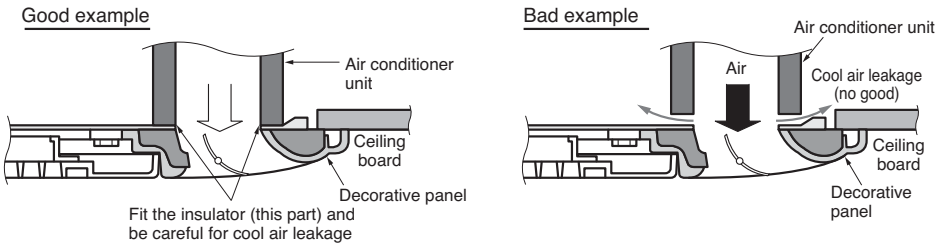

HEAT INSULATION

1. Use the heat insulation material for the refrigerant piping which has an excellent heat-resistance [over 120°C(248°F)].

2. Precautions in high humidity circumstance:
   This air conditioner has been tested according to the "KS Standard Conditions with Mist" and confirmed that there is not any default. However, if it is operated for a long time in high humid atmosphere [dew point temperature: more than 23°C(73.4°F)], water drops are liable to fall. In this case, add heat insulation material according to the following procedure:

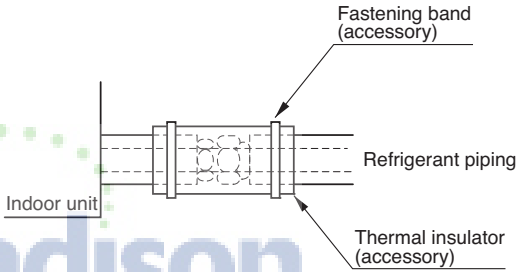

- Heat insulation material to be prepared... Adiabatic glass wool with thickness 10 to 20mm.
- Stick glass wool on all air conditioners that are located in ceiling atmosphere.

Madison Your Appliance Authority™ 800 570 3355

Drain Piping

[Standard / Standard Libero / Artcool Mirror Type]

1. The drain hose should point downward for optimum drainage.

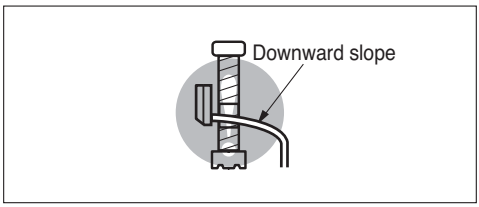

2. Incorrect Installation Examples:

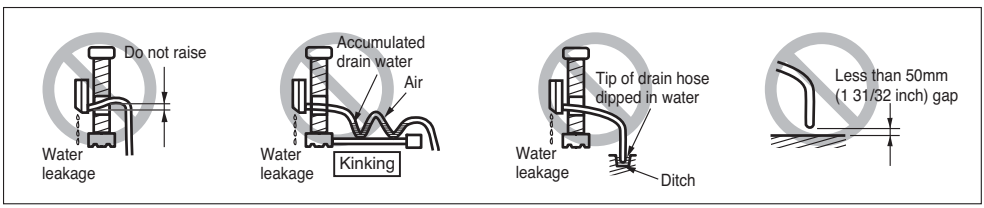

[Cealing Concealed Duct/Cealing Cassette Type]

- Drain piping must have down-slope (1/50 to 1/100): be sure not to provide up-and-down slope to prevent reversal flow.
- During drain piping connection, be careful not to exert extra force on the drain port on the indoor unit.
- The outside diameter of the drain connection on the indoor unit is 32mm(1 1/4 inch).

Piping material: Polyvinyl chloride pipe inner diometes Ø 25mm(1 inch) and pipe fittings

- Be sure to install heat insulation on the drain piping.

Heat insulation material: Polyethylene foam with thickness more than 8mm(5/16 inch).

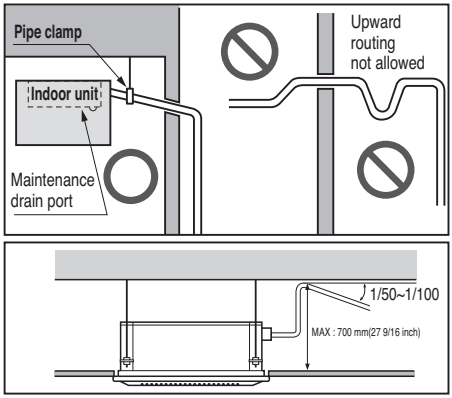

Drain test

The air conditioner uses a drain pump to drain water.
Use the following procedure to test the drain pump operation:

- Connect the main drain pipe to the exterior and leave it provisionally until the test comes to an end.
- Feed water to the flexible drain hose and check the piping for leakage.
- Be sure to check the drain pump for normal operating and noise when electrical wiring is complete.
- When the test is complete, connect the flexible drain hose to the drain port on the indoor unit.

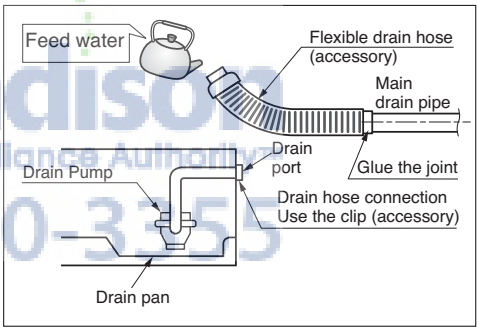

CAUTION : The supplied flexible drain hose should not be curved, neither screwed. The curved or screwed hose may cause a leakage of water.

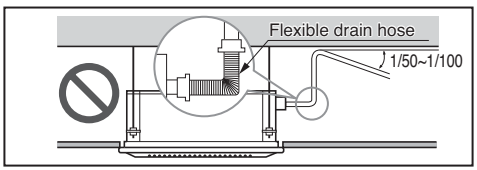

❉ The figure can be changed according to model.

AJMadison Your Appliance Authority 800-570-3355

Attention

1. Possible drain-head height is up to 700mm(27 9/16 inch). So, it must be installed below 700mm(27 9/16 inch).

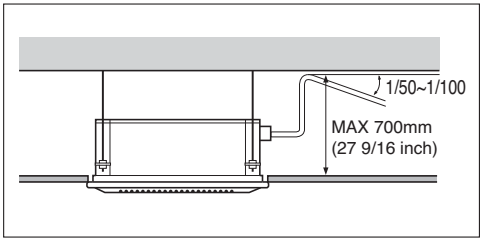

2. Keep the drain hose downward up to 1/50~1/100 inclination.
   Prevent any upward flow or reverse flow in any part.

3. 5mm(3/16 inch) or thicker formed thermal insulator is provided for the drain pipe.

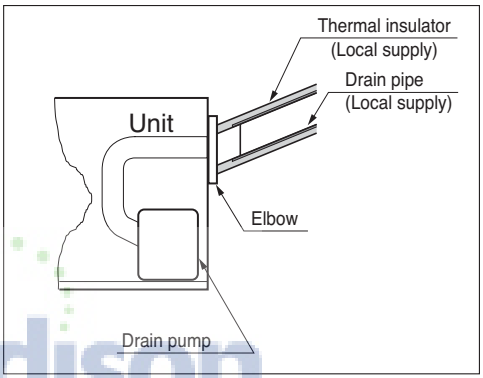

4. Upward routing is not allowed.

5. Be sure to check the drain pump for normal operation and abnormal noise when electrical wiring is complete.

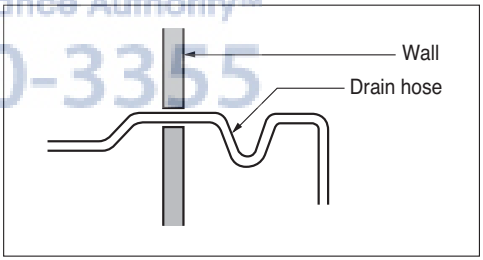

AjMadison
Your Appliance Authority™
800-570-3355

Flaring Work and Connection of Piping

Flaring work

Main cause of gas leakage is defect in flaring work. Carry out correct flaring work in the following procedure.

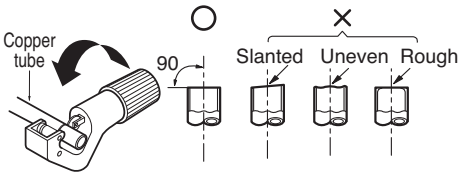

1) Cut the pipes and the cable.

- Use the accessory piping kit or the pipes purchased locally.
- Measure the distance between the indoor and the outdoor unit.
- Cut the pipes a little longer than measured distance.
- Cut the cable 1.5m(4.9ft) longer than the pipe length.

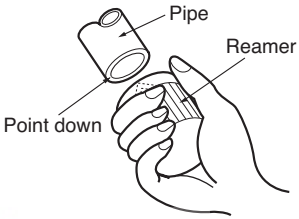

2) Burrs removal

- Completely remove all burrs from the cut cross section of pipe/tube.
- Put the end of the copper tube/pipe to downward direction as you remove burrs in order to avoid to let burrs drop in the tubing.

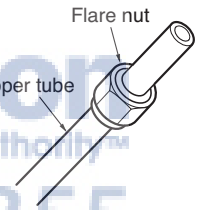

3) Putting nut on

- Remove flare nuts attached to indoor and outdoor units, than put them on pipe/tube having completed burr removal.
  (Not possible to put them on after flaring work)

AiMadison
Your Appliance Authority™
800-570-3355

4) Flaring work

- Carry out flaring work using flaring tool as shown below.

Outside diameter		A	
mm	inch	mm	inch
Ø6.35	1/4	1.1~1.3	0.04~0.05
Ø9.52	3/8	1.5~1.7	0.06~0.07
Ø12.7	1/2	1.6~1.8	0.06~0.07

Firmly hold copper tube in a bar(or die) as indicated dimension in the table above.

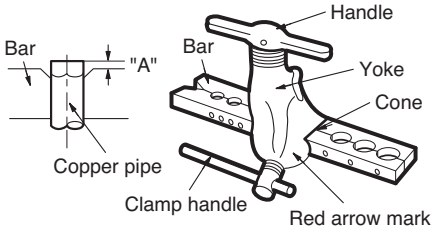

5) Check

- Compare the flared work with figure.
- If flare is noted to be defective, cut off the flared section and do flaring work again.

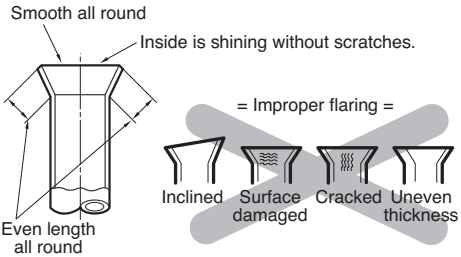

Connection of piping - Outdoor

Align the center of the piping and sufficiently tighten the flare nut by hand.

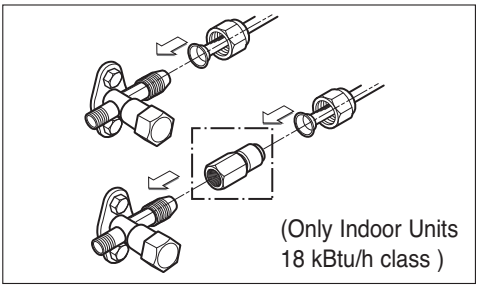

Connecting pipe order

1) A~D-UNIT gas side pipe

2) A~D-UNIT liquid side pipe

Finally, tighten the flare nut with torque wrench until the wrench clicks.

- When tightening the flare nut with torque wrench ensure the direction for tightening follows the arrow on the wrench.

Outside diameter		Torque
mm	inch	kgf.m(lbf.ft)
Ø6.35	1/4	1.8~2.5 (13~18)
Ø9.52	3/8	3.4~4.2 (24~30)
Ø12.7	1/2	5.5~6.6 (40~48)

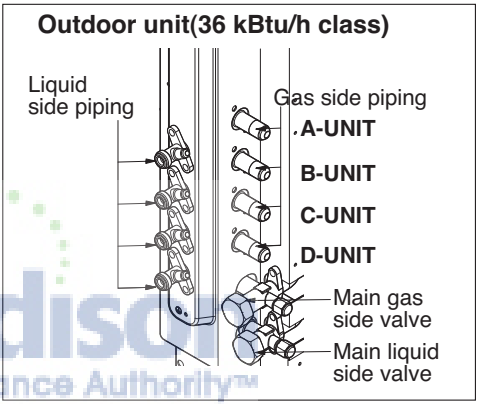

AjMadison
Your Appliance Authority™
800-570-3355

Connecting the Cable between Indoor Unit and Outdoor Unit

Connect the cable to the Indoor unit.

Connect the cable to the indoor unit by connecting the wires to the terminals on the control board individually according to the outdoor unit connection. (Ensure that the color of the wires of the outdoor unit and the terminal No. are the same as those of the indoor unit.)
The ground wire should be longer than the common wires.
The circuit diagram is not subject to change without notice.
When installing, refer to the electrical diagram behind the front panel of Indoor Unit.
The wiring for the outdoor unit can be found on the inside of the Outdoor Unit control cover.

RECOMMENDATION:
- **The circuit diagram is subject to change without notice.**
- **Be sure to connect wires according to the wiring diagram.**
- **Connect the wires firmly, so that they can not be pulled out easily.**
- **Connect the wires according to color codes by referring to the wiring diagram.**

RECOMMENDATION: Provide a circuit breaker between power source and the outdoor unit as shown below.

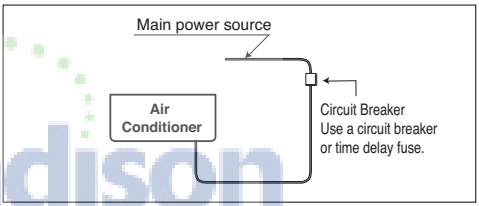

Outdoor Unit Capacity (Btu/h class)	Power source	Fuse or breaker Capacity
18k	1ø,208/230V	15A
24/36k	1ø,208/230V	25A

AiMadison Your Appliance Authority™ 800-570-3355

RECOMMENDATION: The power cord connected to the outdoor unit should comply with the following specifications: NRTL Recognized(for example, UL or ETL recognized and CSA certified).

■ Power supply cable

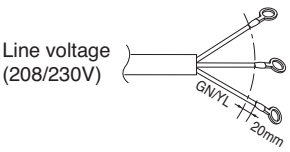

The minimum recommended wire size for the 18kBtu/h unit is AWG 14-3, the minimum wire size for the 24/36kBtu/h unit is AWG 12-3.
As always, final wire selection is governed by local codes and should be installed by a licensed professional contractor.

■ Connecting cable

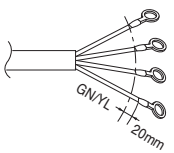

The power connecting cable between the outdoor and indoor units must comply with the following specifications: NRTL Recognized (for example, UL or ETL recognized and CSA certified).
AWG 18-4 is the minimum recommended wire size, however, the selected conductors must comply with local codes and be suitable for installation in wet locations.

RECOMMENDATION: When using separate wires as the power cord, please secure separate wires in the control box panel using tie wraps to hold all wires in place.

Connect the cable to the Outdoor unit.

1. Remove the control cover from the unit by loosening the screw.
   Connect the wires to the terminals on the control board individually as the following.
2. Secure the cable onto the control board with the holder (clamper).
3. Re-attach the cover control to the original position using the screws.

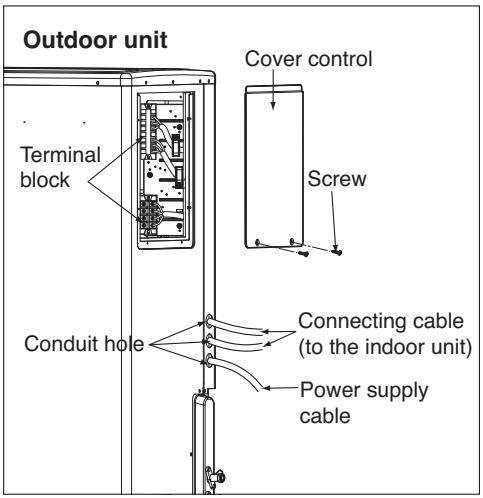

18kBtu/h class

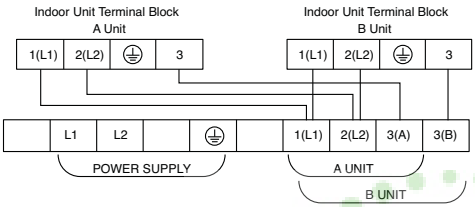

24/36 kBtu/h class

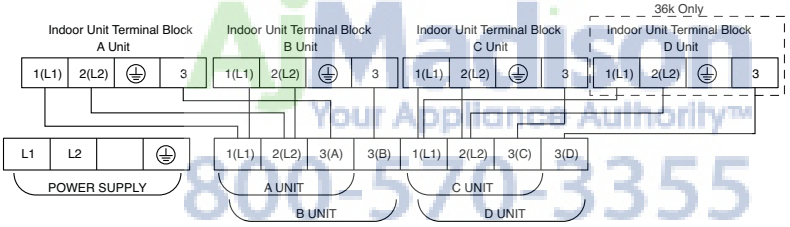

A-Madison
Your Appliance Authority™
800-570-3355

NOTICE :

1. Use connection cable NRTL(UL, ETL, CAS…) listed and stranded copper(4) THHN conductors, sunlight (UV) resistant ROHS compliant PVC jacket 600V direct burial listed, approved for wet conditions. Temperature rated for –20°C(-4°F) to 90°C(194°F). And this cable should be enclosed in conduit.

WARNING:

- **Be sure to comply with local and national codes while running the wire from the indoor unit to the outdoor unit(size of wire and wiring method, etc).**
- **Every wire must be connected firmly.**
- **No wire should be allowed to touch refrigerant tubing, the compressor or any moving parts.**
- **The communication wirings of air conditioner should be separate and isolated from external device's electric wiring such as computers, elevator, radio & Television broadcasting facilities, as well as medical imaging offices.**

Connection method of the connecting cable(Example)

(1) Remove the side panel and knockouts of conduit panel. (for low voltage line)
(2) Pull out connection cable through conduit.
(3) After conduit to the panel, fix nut to the opposite side of panel.
(4) Pass the connection cabel through the hole.
(5) Properly connect the cable on the terminal block.
(6) Fix the connection cable with cord clamp provided on the unit not to have strain at the terminal when the connection cable is pulled outside up to a 35 pound weight

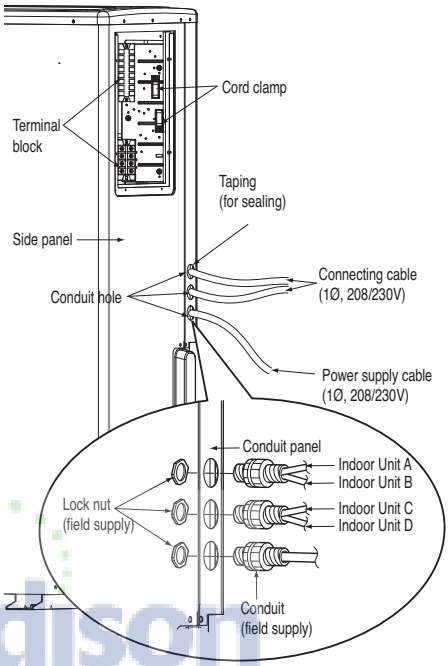

WARNING: Loose wiring may cause the terminal to overheat or result in unit malfunction. A fire hazard may also exist. Therefore, be sure all wiring is tightly connected.

When connecting each power wire to the corresponding terminal, follow instructions "How to connect wiring to the terminals" and fasten the wire tightly with the fixing screw of the terminal plate.

How to connect wiring to the terminals

■ For strand wiring
(1) Cut the wire end with a wire cutter or wire-cutting pliers, then strip the insulation to expose the strand wiring about 10 mm(3/8").
(2) Using a screwdriver, remove the terminal screw(s) on the terminal plate.
(3) Using a round terminal fastener or pliers, securely clamp each stripped wire end with a round terminal.
(4) Position the round terminal wire, and replace and tighten the terminal screw using a screwdriver.

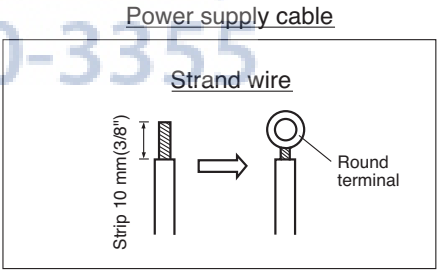

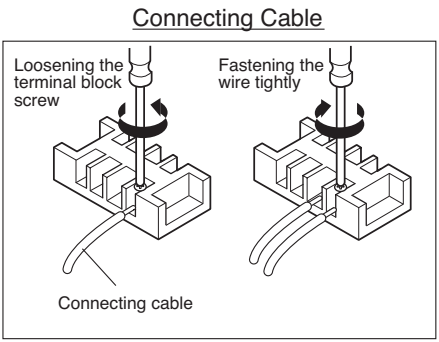

AJMadison
Your Appliance Authority™
800-570-3355

Checking the Drainage, Insulating the Pipe and Special Piping Applications

Checking the drainage

1. Remove the Air Filter.

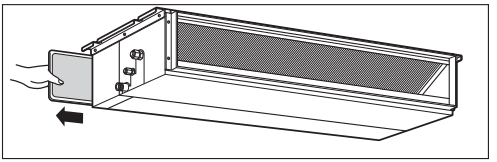

2. Check the drainage.

- Spray one or two glasses of water upon the evaporator.
- Ensure that water flows drain hose of indoor unit without any leakage.

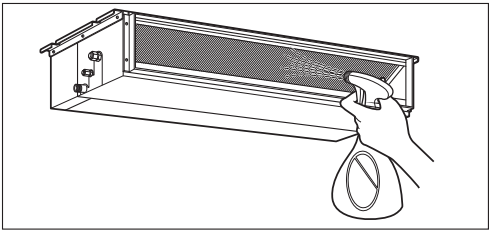

❊ The figure can be changed according to model.

Insulating the Pipe and Special Piping Applications

Insulate the piping by wrapping the connecting portion of the indoor unit with insulation material and secure it with two kinds of vinyl tape.

- If you want to connect an additional drain hose, the end of the drain outlet should be routed above the ground. Secure the drain hose appropriately.

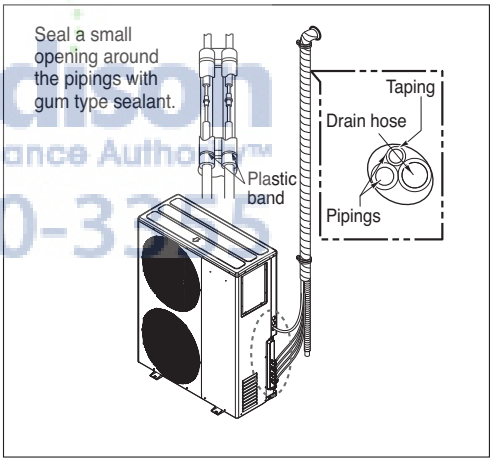

In cases where the outdoor unit is installed below the indoor unit perform the following:

1. Tape the piping, drain hose and connecting cable from down to up.
2. Secure the taped piping along the exterior wall using saddle or equivalent.

In cases where the Outdoor unit is installed above the Indoor unit perform the following.

1. Tape the piping and connecting cable from down to up.
2. Secure the taped piping along the exterior wall. Form a trap to prevent water entering the room.
3. Secure the piping onto the wall using a saddle or equivalent.

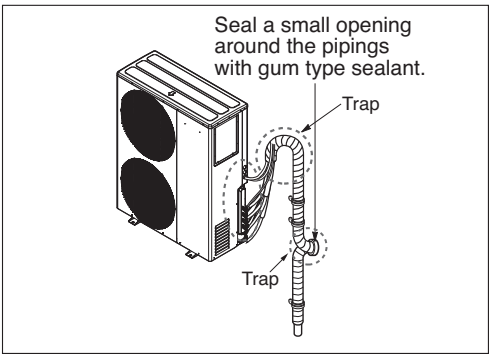

Madison Your Appliance Authority™ 800-570-3355

Long Pipe Setting

1. Open the top cover of outdoor unit.
2. Select one of the two selectable modes as follows.
3. Set the Zone as shown in Fig.
4. Close the top cover and check whether the product works normally.

WARNING: Do not open the top cover or Set the pipe length when operating the product.

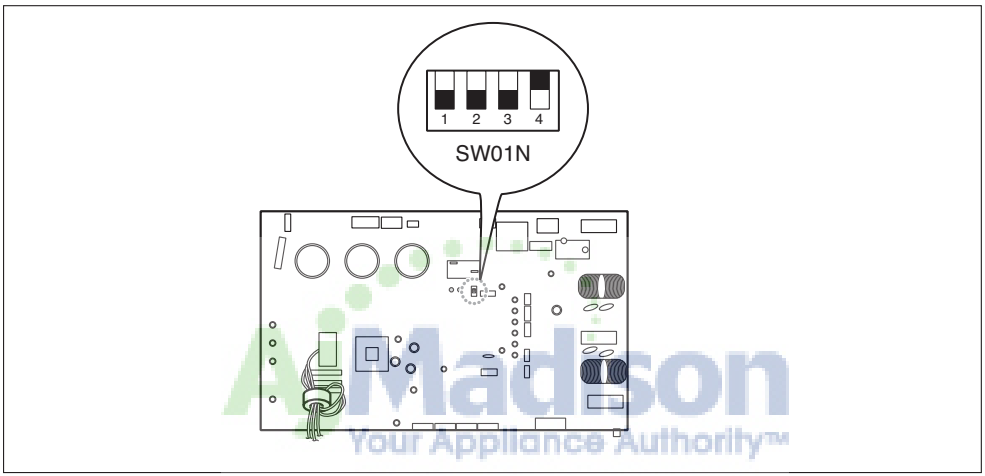

AjMadison
Your Appliance Authority™
800-570-3355

Air Purging and Evacuation

Air and moisture remaining in the refrigerant system have undesirable effects as indicated below.

1. Pressure in the system rises.
2. Operating current rises.
3. Cooling(or heating) efficiency drops.
4. Moisture in the refrigerant circuit may freeze and block capillary tubing.
5. Water may lead to corrosion of parts in the refrigeration system.

Therefore, the indoor/outdoor unit and connecting tube must be checked for leaks, and vacuumed to remove incondensible gas and moisture in the system.

Leak Checking

Preparation

- Check that each tube(both liquid and gas side tubes) between the indoor and outdoor units have been properly connected and all wiring for the test run has been completed. Remove the service valve caps from both the gas and the liquid sides on the outdoor unit. Check that both the liquid and the gas side service valves on the outdoor unit are kept closed at this stage.

Leakage test

- Connect the manifold valve(with pressure gauges) and dry nitrogen gas cylinder to this service port with charge hoses.

CAUTION: Be sure to use a manifold valve for leak testing. The high side manifold valve must always be kept closed.

- Pressurize the system to no more than 150 P.S.I.G. with dry nitrogen gas and close the cylinder valve when the gauge reading reached 150 P.S.I.G. Next, test for leaks with liquid soap.

CAUTION: To avoid nitrogen entering the refrigerant system in a liquid state, the top of the cylinder must be higher than its bottom when you pressurize the system. Usually, the cylinder is used in a vertical standing position.

NOTICE : Leakage testing shoud be done for each indoor unit connection set, separately.

1. Do a leakage test of all joints of the tubing(both indoor and outdoor) and both gas and liquid side service valves with soap bubbles.
   Bubbles indicate a leak. Be sure to wipe off the soap with a clean cloth.
2. After the system is found to be free of leaks, relieve the nitrogen pressure by loosening the charge hose connector at the nitrogen cylinder. When the system pressure is reduced to normal, disconnect the hose from the cylinder.

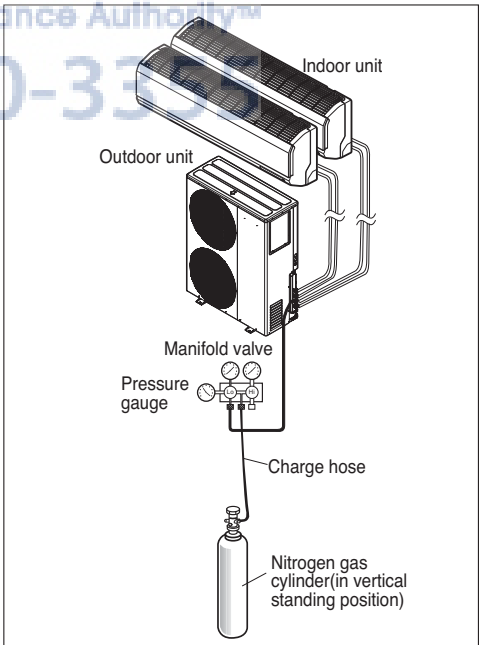

❊ The figure can be changed according to model.

AiMachine Your Appliance Authority™ 800-570-3356

Evacuation

1. Connect the charge hose end described in the preceding steps to the vacuum pump to evacuate the tubing and indoor unit.
   Confirm the "Lo" knob of the manifold valve is open. Then, run the vacuum pump.
   The operation time for evacuation varies with tubing length and capacity of the pump.

   [Each Room] The vacuum pump must be operated less than 0.8torr of the gage pressure.

2. When the desired vacuum is reached, close the "Lo" knob of the manifold valve and stop the vacuum pump.

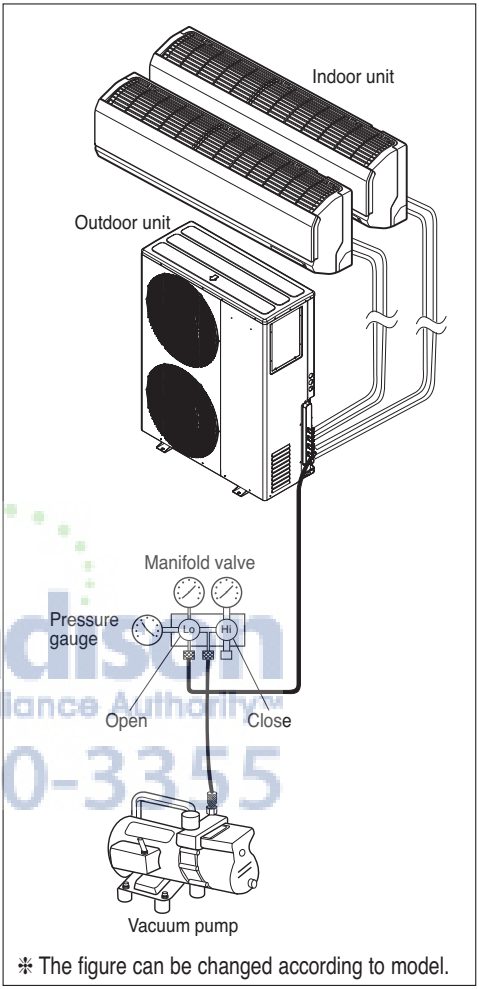

❊ The figure can be changed according to model.

Finishing the job

1. With a service valve wrench, turn the valve stem of liquid side valve counter-clockwise to fully open the valve.
2. Turn the valve stem of gas side valve counter-clockwise to fully open the valve.
3. Loosen the charge hose connected to the gas side service port slightly to release the pressure, then remove the hose.
4. Replace the flare nut and its bonnet on the gas side service port and fasten the flare nut securely with an adjustable wrench. This process is very important to prevent leakage from the system.
5. Replace the valve caps at both gas and liquid side service valves and fasten them tight.

This completes air purging with a vacuum pump.

The air conditioner is now ready for test running.

NOTICE

: Repeat evacuation procedure for each indoor unit.

AjMadison
Your Appliance Authority
800-570-3355

Charging

■ If installed total piping length is more than standard total length, additional refrigerant charging is necessary.
Below standard total piping length, additional refrigerant charging is not required.

Unit:m(ft)

Outdoor Unit Capacity (Btu/h class)	Max total length of all pipes (A+B)/(A+B+C)/(A+B+C+D)	Max length of each pipe (A/B/C/D)	Min length of each pipe (A/B/C/D)	Additional Refrigerant Unit : g/m (oz/ft)	Standard Total Piping Length (No Add`l refrigerant)
18k	50(164)	25(82)	3(9.8)	20(0.22)	15(49.2)
24k	75(246)	25(82)	3(9.8)	20(0.22)	22.5(74)
36k	75(246)	25(82)	3(9.8)	20(0.22)	30(98.4)

Important:

If you are ever uncertain of the unit charge, reclaim, evacuate and weigh in the correct charge using the charge amount specified on the Unit`s specification label.

Additional charge(oz) = (Total Installation Piping Length-Standard Total Piping Length) x 0.22

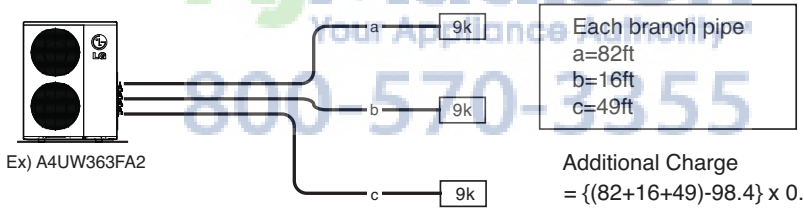

Ex) A4UW363FA2

Additional Charge
= {(82+16+49)-98.4} x 0.22 = 10.69 oz

❊ If the total additional charge value after calculation comes out to be negative, then do not consider additional charge.

AjMadison
Your Appliance Partner
800-570-3355

Combination indoor units

The indoor units connectable to the outdoor unit are shown below

Type	Chassis Name	Indoor Unit Capacity (Btu/h class)			Outdoor Unit Capacity (Btu/h class)		
		9k	12k	18k	18 k	24 k	36 k
		Model Name			Connectable Combination		
Standard Type	SE	AMNW09GDEL1 [LMN095HV(T)]	AMNW12GDEL1 [LMN125HV(T)]		O	O	O
	S5			AMNW18GD5L1 [LMN185HV(T)]		O	O
Standard Libero ype	SB	AMNW09GDBL0 [LMN096HVT]	AMNW12GDBL0 [LMN126HVT]		O	O	O
	SC			AMNW18GDCL0 [LMN186HVT]		O	O
Artcool Mirror Type	SE	AMNW09GDER1 [LMAN095HV(T)]	AMNW12GDER1 [LMAN125HV(T)]		O	O	O
	S8			AMNW18GD8R1 [LMAN185HV(T)]		O	O
Ceiling Concealed Duct Type	B1	AMNW09GB1A0 [LMDN095HV]	AMNW12GB1A0 [LMDN125HV]		O	O	O
	B2			AMNW18GB2A0 [LMDN185HV]		O	O
Ceiling Cassette Type	TR		AMNW12GTRA0 [LMCN125HV]		O	O	O
	TQ			AMNW18GTQA0 [LMCN185HV]		O	O

NOTICE : 1. The total capacity(in Btu/h unit) of connected indoor unit models represents the total sum of the figures expressed in the indoor model name.

2. Combinations in which the total capacity of the connected indoor units exceeds the capacity of the outdoor unit will reduce the capacity of each indoor unit below the rated capacity during simultaneous operation. Therefore, if circumstances allows, combine indoor units within the capacity of the outdoor unit

Madison
Your Appliance Authority
800-570-3355

AjMadison
Your Appliance Authority™
800-570-3355

AjMadison
Your Appliance Authority™
800-570-3355

US	1. Please call the installing contractor of your product, as warranty service will be provided by them. 2. If you have service issues that have not been addressed by the contractor, please call 1-888-865-3026.
CANADA	Service call Number # : (888) LG Canada, (888) 542-2623