INSTALLATION MANUAL

# Fairlane Stainless Steel Top Mount Kitchen Sink

## KHT631-18/ KHT641-22/ KHT641-24/ KHT640-28/ KHT640-30/ KHT601-25-10

 © 2026 Kraus USA Plumbing LLC 

## Congratulations on the purchase of your new Kraus® plumbing fixture!

Please keep the box and packaging materials until your product is completely installed. If you have any questions, require technical assistance or have any problems with your product:

**STOP** **DO NOT RETURN TO STORE**

**Please contact our Customer Service Team**
**1-800-775-0703 / customerservice@kraususa.com**

Have the model number available and retain a copy of your receipt with purchase date for reference.

If for any reason this product does not meet your expectations, please be sure to repack this product in the original box and packaging material to avoid damage during transit.

**Prior to Installation:**

- Make sure that you have all necessary parts by checking the parts list. If any part is missing or damaged, please contact Kraus® Customer Service at 800-775-0703 for a replacement.
- Inspect the sink prior to installation to make sure that it has not been damaged during shipping.
- Read all instructions and safety warnings and ensure you have all tools, parts, and equipment necessary for a safe installation.
- Use the cut-out template provided by Kraus.
- Observe all plumbing and building codes according to your state requirements.
- To reduce the risk of personal injury, wear eye protection complying with ANSI standard Z87.1+ and cut resistant gloves complying with EN388 with non-slip grip when cutting or drilling, or when handling the sink and wear closed toe shoes at all times during installation.
- **Note:** Before installation, please check that the drain kit complies with ASME A112.18.2/CSA B125.2 and with CUPC certification.
- Not recommended to be installed with laminate countertop.

**For technical assistance or replacement parts, please contact Kraus Customer Service and one of our representatives will be happy to help:**
**Toll-Free: 800-775-0703 or customerservice@kraususa.com**

While these step-by-step instructions are intended to assist in the safe installation of a Kraus sink, this product is likely to perform best when installed by a licensed professional. The failure to follow these instructions or to hire a professional when needed may result in personal injury or property damage and may void the warranty.

## Cleaning & Maintenance:

Clean your sink on a regular basis with warm soapy water. Rinse the sink after using cleaning products. Wipe the sink surface with a soft cloth to remove any liquid residue. Do not cut food directly on the surface of the sink. Do not leave sharp objects on the surface of the sink for an extended period of time. Do not use abrasive cleaning products, sanding tools, steel wool or bleaching products as use of such products may affect product performance or void the warranty.

## Tools you will need

| | | | | | |
|---|---|---|---|---|---|
| 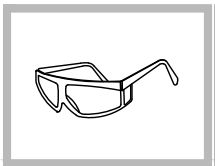 | 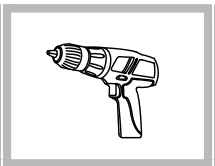 | 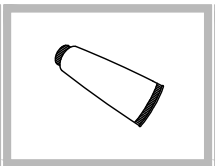 | 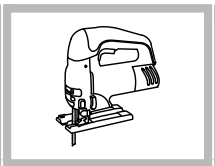 | | 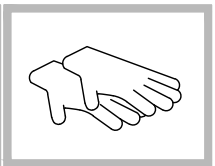 |
| Safety Goggles | Drill | Silicone Adhesive | Jig Saw | Phillips Screwdriver | Cut Resistant Gloves |
| 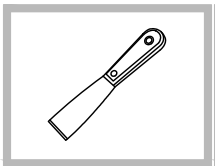 | 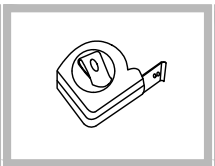 | 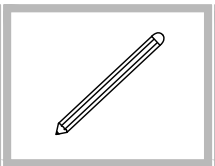 | 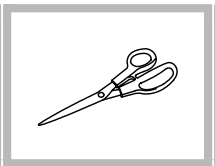 | 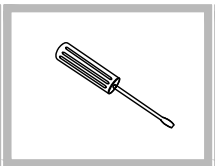 | 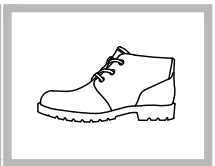 |
| Putty Knife | Tape Measure | Pencil | Scissors | Screwdriver | Closed Toe Shoes |

**NOTE:** Specialized tools may be necessary to install Kraus® Stainless Steel Kitchen sinks with countertop materials other than wood, marble or granite.

## Parts List

- Strainer
- Bottom Grid
- Cutout Template
- Mounting Hardware

# Dimensions

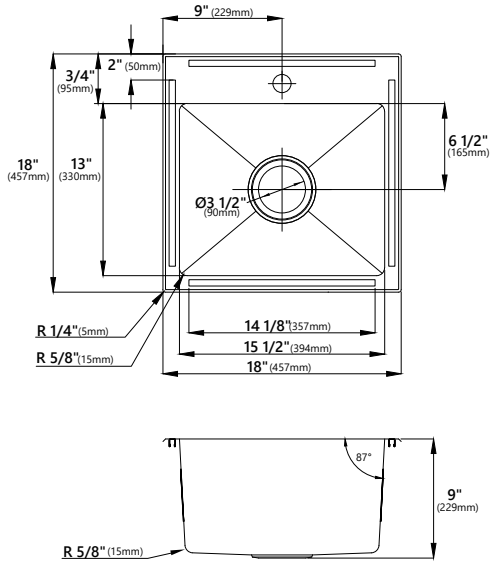


Model #: KHT631-18
Sink Dimensions: 18″ x 18″ x 9″
Min Cabinet Size: 21″
Matching Grid: KBG-631-18
Strainer: ST-1

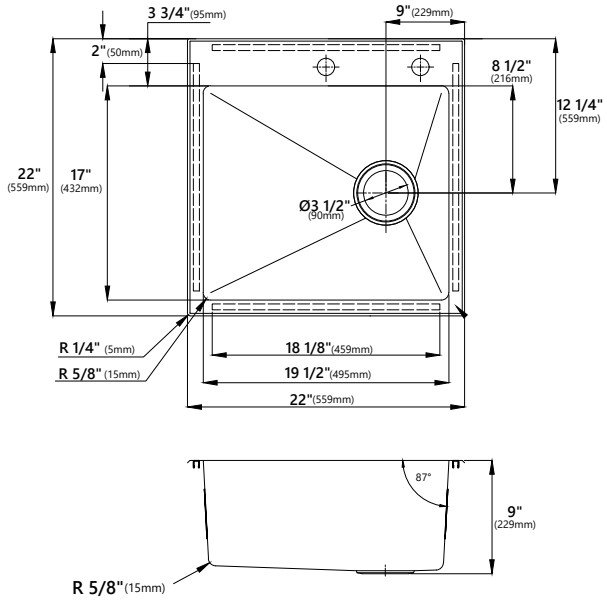


Model #: KHT641-22
Sink Dimensions: 22″ x 22″ x 9″
Min Cabinet Size: 25″
Matching Grid: KBG-641-22
Strainer: ST-1

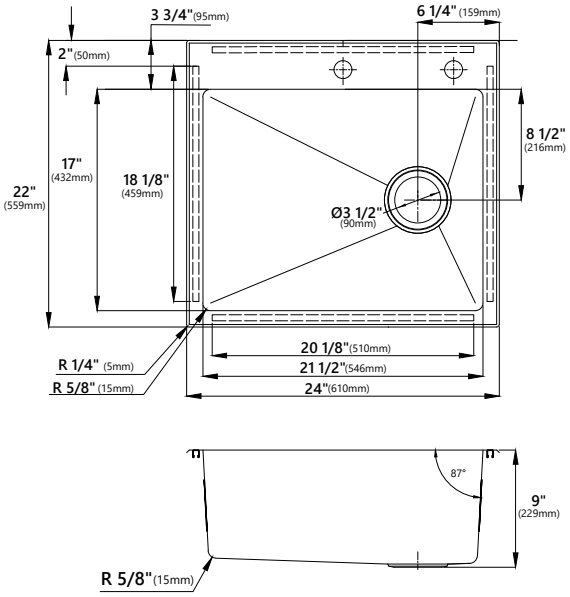


Model #: KHT641-24
Sink Dimensions: 24″ x 22″ x 9″
Min Cabinet Size: 27″
Matching Grid: KBG-641-24
Strainer: ST-1

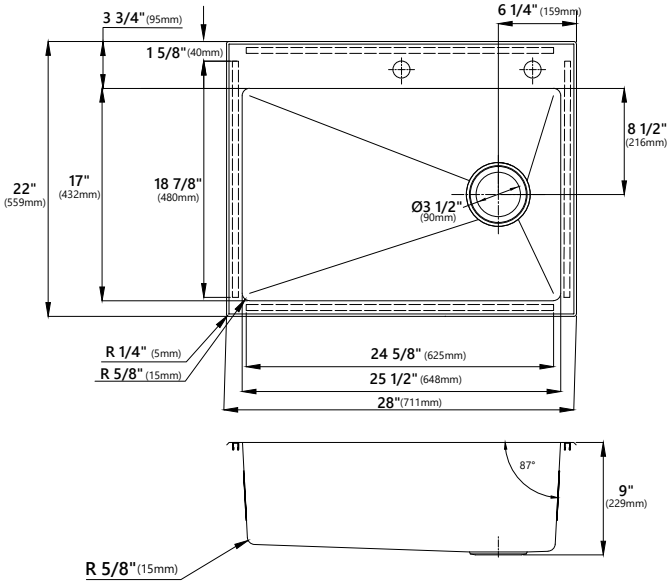


Model #: KHT640-28
Sink Dimensions: 28″ x 22″ x 9″
Min Cabinet Size: 31″
Matching Grid: KBG-640-28
Strainer: ST-1

# Dimensions

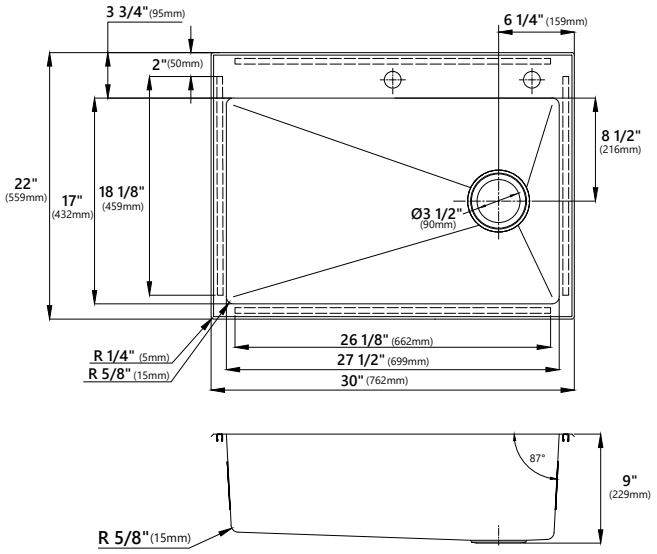


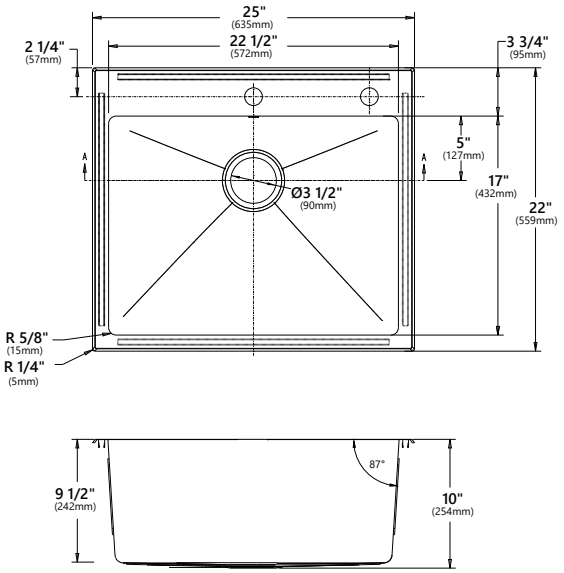


Model #: KHT640-30
Sink Dimensions: 30″ x 22″ x 9″
Min Cabinet Size: 33″
Matching Grid: KBG-640-30
Strainer: ST-1

Model #: KHT601-25-10
Sink Dimensions: 25″ x 22″ x 10″
Min Cabinet Size: 28″
Matching Grid: KBG-601-25
Strainer: ST-1

## Step 1. Position Template

- Check the cut-out template against the actual sink to ensure a proper sized cut-out.
- Place the cut-out template in the desired location on the countertop.

**NOTE:** Make sure clearance is suitable for backsplash, faucet and plumbing for the sink.

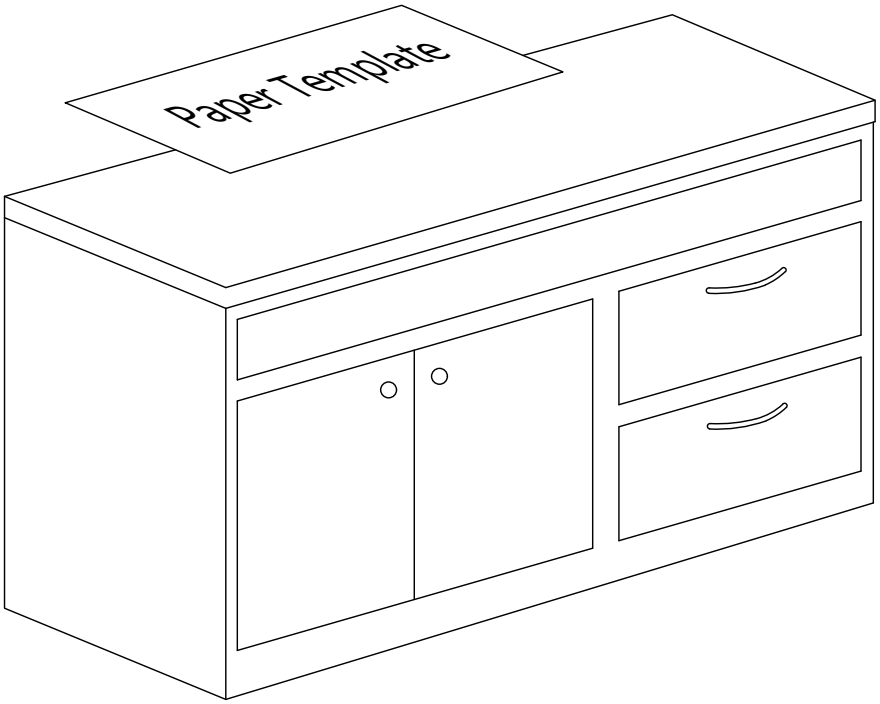

## Step 2. Trace Template

- Trace template on countertop with a pencil.

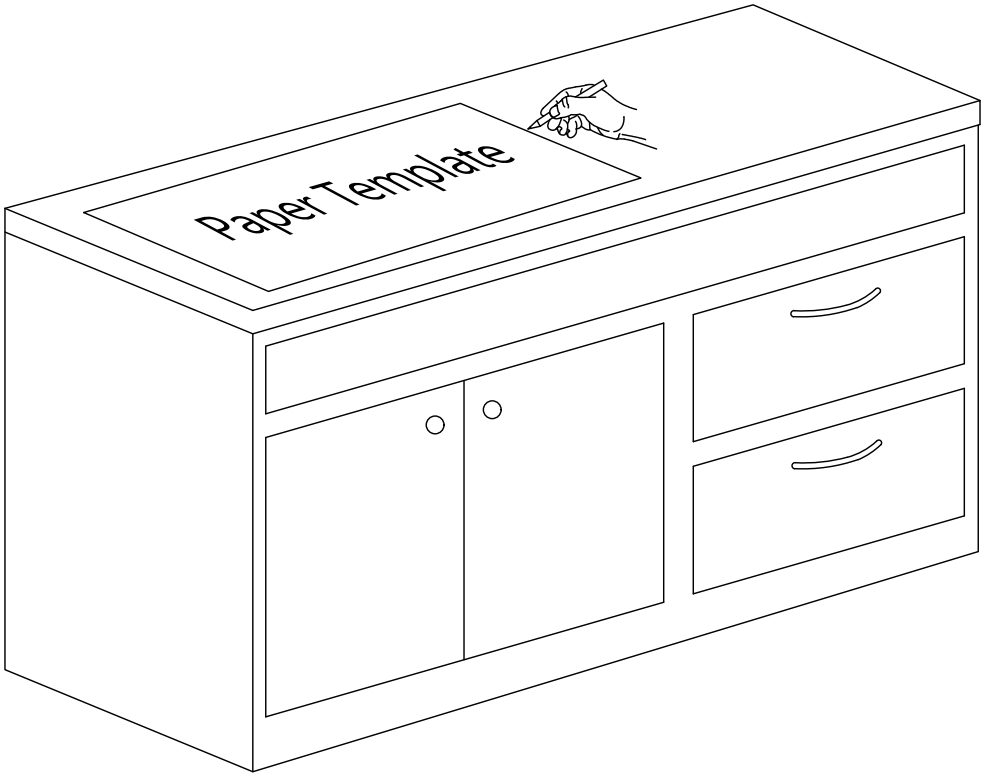

## Step 3. Cut Countertop

- Cut the opening in the countertop by carefully following the traced line.

⚠ **CAUTION** - To avoid the risk of personal injury, wear safety glasses and cut resistant gloves with non-slip grip when cutting.

**NOTE:** Please use the appropriate saw that best fits your countertop material.

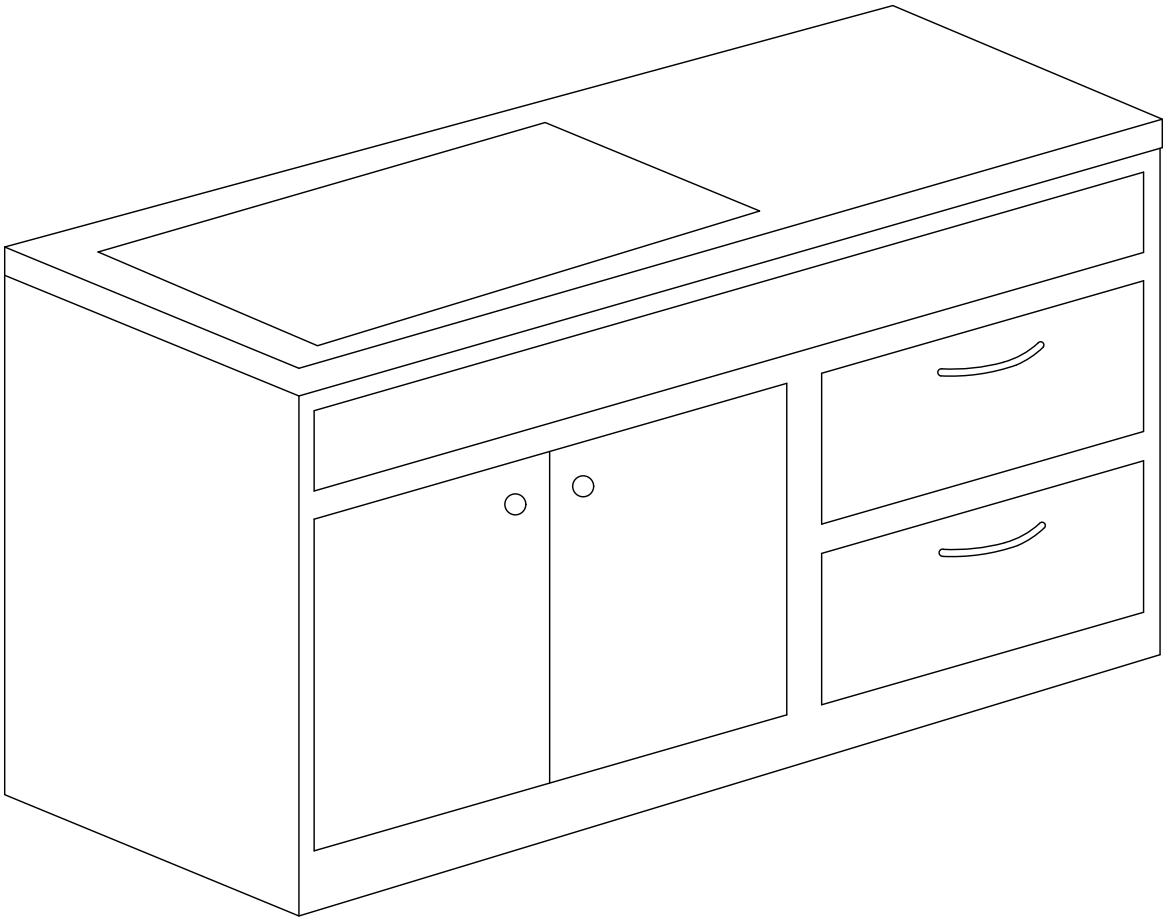

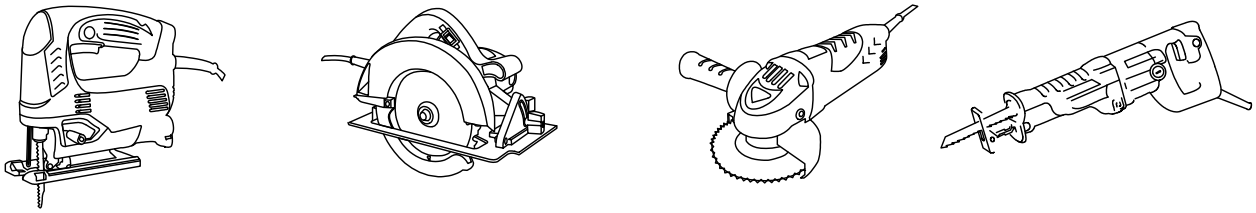

## Step 4. Attach Mounting Hardware

- Attach mounting hardware to the prongs protruding from the underside of the sink rim.
- Make sure the hooked side of the mounting clip is facing away from the sink.

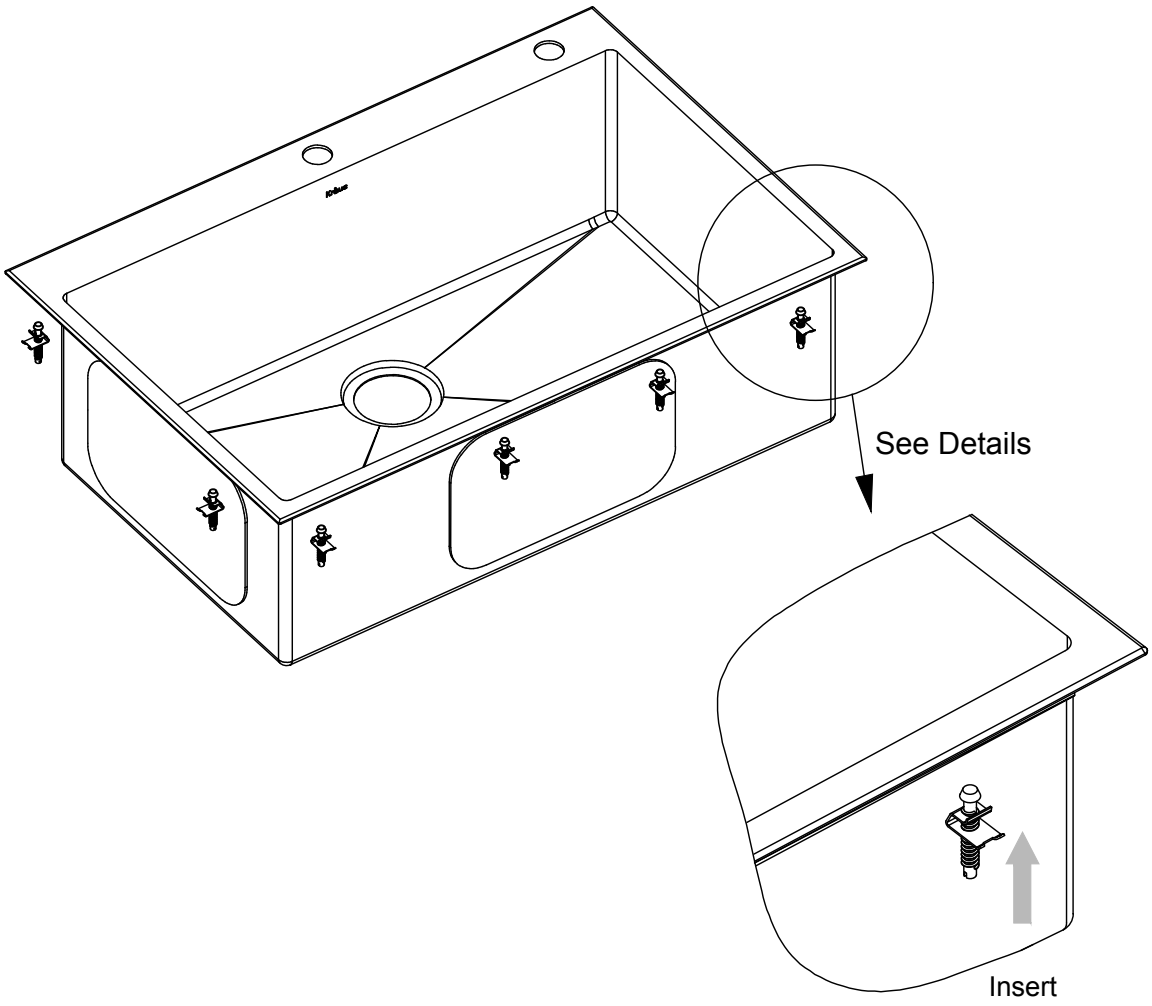

## Step 5. Apply Silicone or Plumber's Putty

- Clean and dry the surface around the opening of the sink.
- Turn the unit upside down to apply sealant. Apply silicone-based sealant (not included) underneath the edge of the sink.

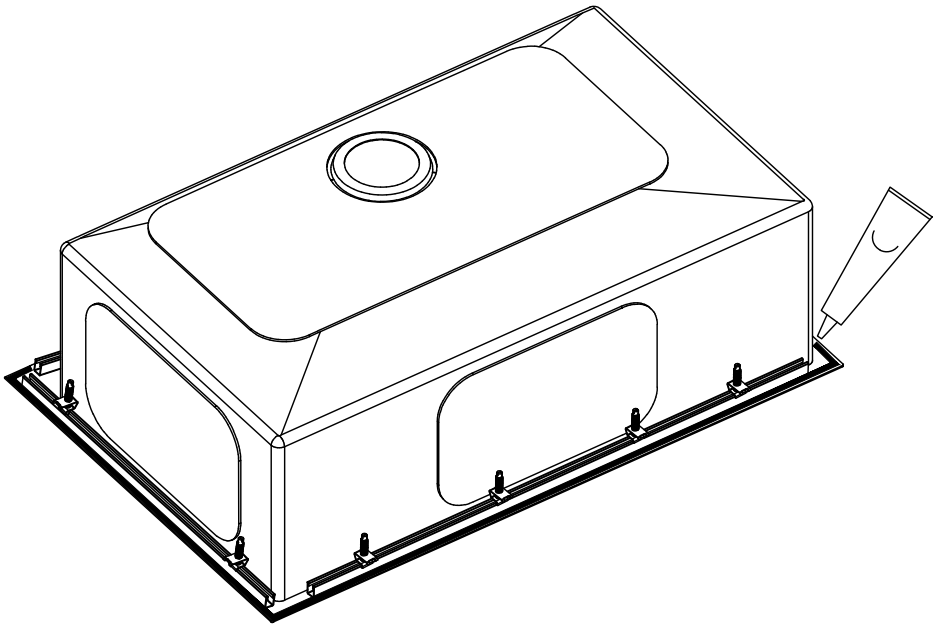

## Step 6. Secure Sink to Countertop

- Insert the sink into the opening, check the alignment of the sink to the cutout in the countertop and press firmly.
- Tighten the screws in the front of the sink, followed by the ones in the back and on the sides of the sink.
- Remove excess silicone-based sealant.
- Allow sealant to set for 30-60 minutes.

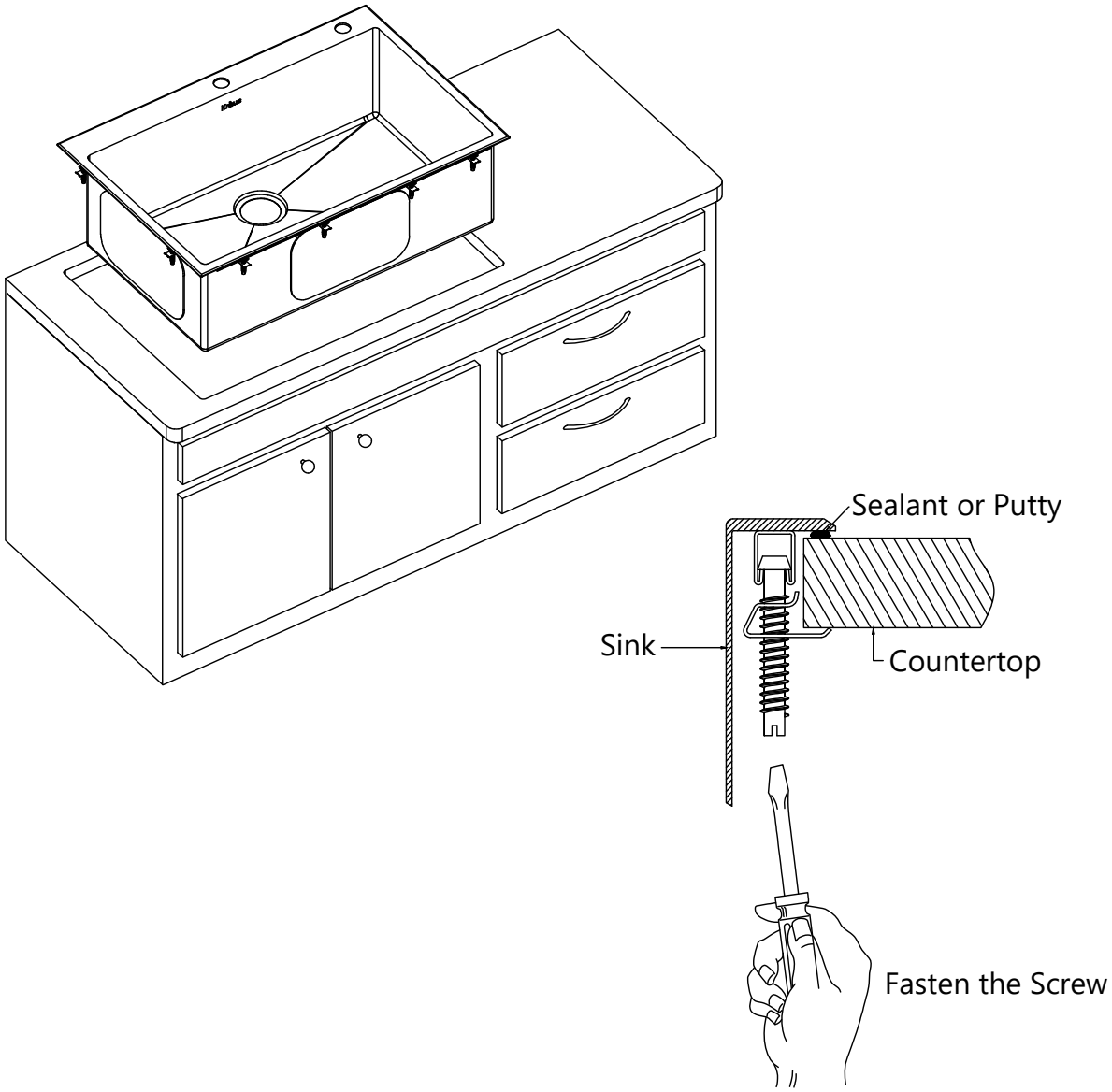

## Step 7. Install Plumbing Fixtures

- Connect drain to sink. Connect trap to drain. Connect water supply connections to faucet according to manufacturer's instructions.
- Run water into sink and check for leaks.

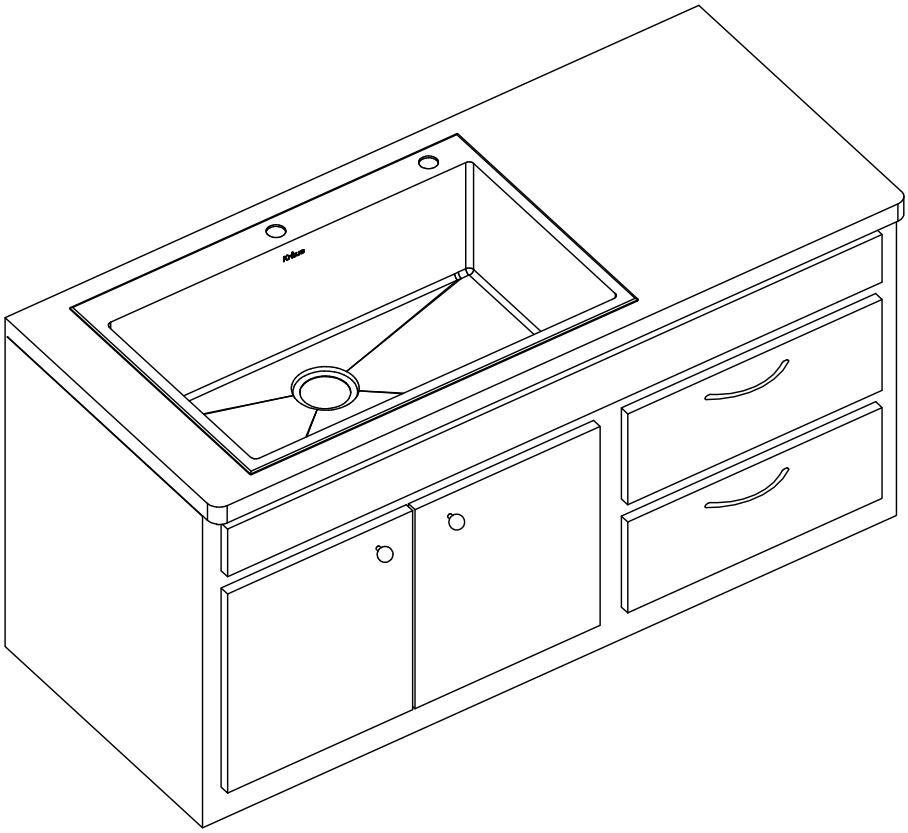

**Codes/Standards Applicable**

**Kitchen Sink - Lifetime Limited Warranty**

Kraus® USA Plumbing, LLC ("Kraus") extends this warranty to the original purchaser for personal household use of the Kitchen Sink when purchased from a Kraus authorized dealer and in the location of original installation. This warranty is non-transferable.

Kraus warrants the structure and finish of the Kitchen Sink to be free from defects in material and workmanship under normal usage for as long as the original purchaser resides in the residence in which the sink was Kitchen Sink was first installed.

Any product reported to the authorized dealer or to Kraus as being defective within the warranty period will be repaired or replaced with a product of equal value at the option of Kraus.

Commercial Warranty

Kraus USA Plumbing, LLC ("Kraus") warrants its Products for a period of one (1) year to commercial purchasers of Products used in industrial, commercial and business applications.

Care and Cleaning Instructions

Certain cleaning products may cause damage to a Product's finish and use of the following on the Product will void this warranty:

- Abrasive cleaners such as powders, bleach, ammonia, alcohol or chorine
- Abrasive pads, steel wool or wire brushes

What is Not Covered

This warranty does not cover Products that were discontinued when purchased or display Products, whether such Products were purchased at discount outlets, unauthorized dealers, and/or sold on clearance. This warranty does not cover any free gifts included with purchase.

This warranty does not cover damage resulting from neglect, misuse (including use for an unintended application), abuse, carelessness, accident, hard water or mineral deposits, exposure to corrosive materials, improper maintenance, alteration of the Product, or failure to follow care, cleaning or installation instructions enclosed with your Product. Kraus recommends that all Kraus Products be installed by a fully licensed and insured trade professional with experience in the installation of bathroom and/or kitchen manufactured goods.

How to Make a Warranty Claim

If you are a **consumer purchaser**, please contact a Kraus® Customer Service Representative at:
Kraus USA Plumbing, LLC
55 E. 111th Street
Indianapolis, IN 46280
Toll-free 800-775-0703
Customerservice@kraususa.com

If you are a **plumbing contractor or trade professional**, please contact a Kraus Pro Representative at:
Kraus USA Plumbing, LLC
55 E. 111th Street
Indianapolis, IN 46280
516-801-8955
Proservice@kraususa.com

If you are an **authorized partner**, please contact a Partner Support Representative at:
Kraus USA Plumbing, LLC
55 E. 111th Street
Indianapolis, IN 46280
516-801-8954
Partnersupport@kraususa.com

In requesting warranty service, please be ready to provide your proof of purchase and a description of the problem. Shipping charges will be covered for the first (1) year of the warranted replacement part or product (HI, AK, and Puerto Rico shipping charges may apply). International shipping fees are not included.

Limitation on Duration of Implied Warranties

Please note that some states/provinces (including Quebec) do not allow limitations on how long an implied warranty lasts, so the below limitations may not apply to you. TO THE MAXIMUM EXTENT PERMITTED BY APPLICABLE LAW, ANY IMPLIED WARRANTY, INCLUDING THE IMPLIED WARRANTIES OF MERCHANTABILITY AND OF FITNESS FOR A PARTICULAR PURPOSE, IS LIMITED TO THE STATUTORY PERIOD OR THE DURATION OF THIS WARRANTY, WHICHEVER IS SHORTER.

Limitation of Special, Incidental or Consequential Damages

Please note that some states/provinces (including Quebec) do not allow the exclusion or limitation of special, incidental or consequential damages, so the below limitations and exclusions may not apply to you. TO THE MAXIMUM EXTENT PERMITTED BY APPLICABLE LAW, THIS WARRANTY DOES NOT COVER, AND KRAUS USA PLUMBING, LLC SHALL NOT BE LIABLE FOR, ANY SPECIAL, INCIDENTAL OR CONSEQUENTIAL DAMAGES (INCLUDING LABOR CHARGES TO REPAIR, REPLACE, INSTALL OR REMOVE THIS PRODUCT), WHETHER ARISING OUT OF BREACH OF ANY EXPRESS OR IMPLIED WARRANTY, BREACH OF CONTRACT, TORT, OR OTHERWISE.

This warranty gives you specific legal rights, and you may also have other rights which vary from state/province to state/province.

**Download the Kraus Care & Maintenance Guide at:**
http://www.kraususa.com/maintenance

# IMPORTANT

## Register Your Kraus® Product

**Activate** Your Warranty

**Access** Premium Customer Support

**Get** Product Information

## REGISTER TODAY

**http://www.kraususa.com/registration**

Kraus®

www.kraususa.com