Kräus®

INSTALLATION MANUAL

Bolden™ Touch Single Handle Pull Down Kitchen Faucet

KTF-1610

Congratulations on the purchase of your new Kraus® plumbing fixture!

Please keep the box and packaging materials until your product is completely installed. If you have any questions, require technical assistance, or have any problems with your product:

STOP **DO NOT RETURN TO STORE**

Please contact our Customer Service Team
1-800-775-0703 / customerservice@kraususa.com

Have the model number available, and retain a copy of your receipt with purchase date for reference.

If for any reason this product does not meet your expectations, please be sure to repack this product in the original box and packaging material to avoid damage during transit.

STOP

Prior to Installation:

- Make sure you have all necessary parts by checking the diagram and parts list. If any part is missing or damaged, please contact Kraus© Customer Service at 800-775-0703 for a replacement.
- Read all instructions and safety warnings and ensure you have all tools, parts, and equipment necessary for a safe installation.
- Turn off the hot and cold water supply at the angle stops and turn on the old faucet to release any built up pressure. Remove existing faucet.
- Pre-drilled hole size requirement: 1 3/8" (min)
- Max countertop thickness: 3 1/8”
- Before installation, it is necessary to keep the sink or countertop dry.

For technical assistance or replacement parts, please contact Kraus Customer Service and one of our representatives will be happy to help:
Toll-Free: 800-775-0703 or Customerservice@kraususa.com

Tools Required

Adjustable Wrench

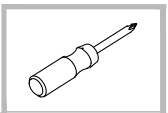
Phillips Screwdriver

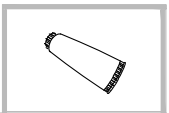
Silicone Sealant

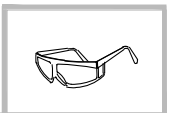
Safety Goggles

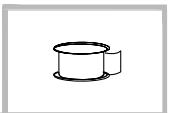
Pipe Tape

6mm Diameter Electric Drill

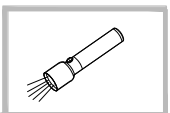
Flashlight

Care & Maintenance

* To keep the product clean & shining, follow the steps below:

1. Rinse with clean water & dry with a soft cloth
2. Do not clean with soaps, acid, polish, abrasives or harsh cleaners
3. Do not use cloth with a coarse surface
4. Unscrew the aerator and clean when necessary

* This installation manual is subject to change without further notice.

Diagram and Parts List

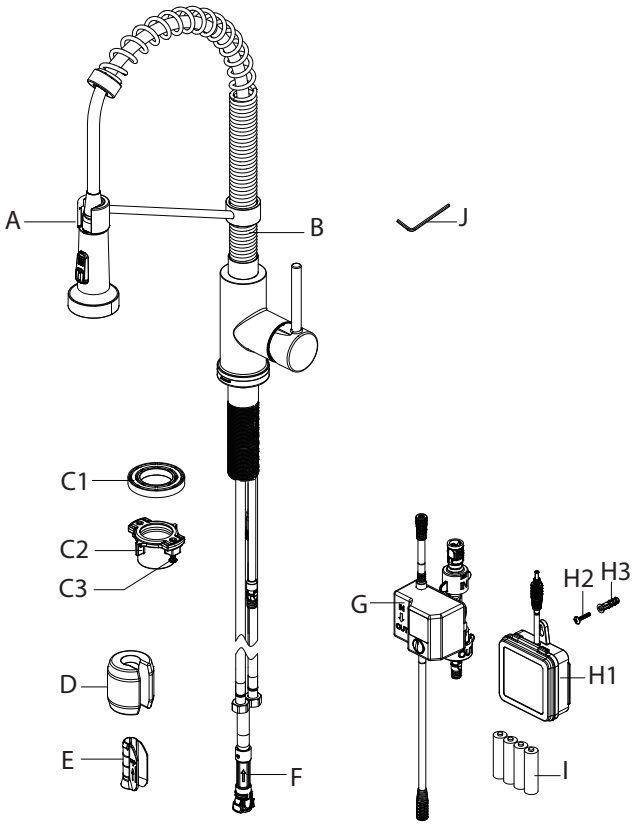

A. Spray Head
B. Faucet Body
C. Mounting Hardware
  C1. Washer
  C2. Nut
  C3. Screws
D. Weight
E . Weight Clip
F . Quick Connector
G. Control Box
H. Battery Pack
  H1. Battery Pack
  H2. Screw
  H3. Anchor
I. Battery
J. 2.5mm Hex Wrench

Faucet Dimensions

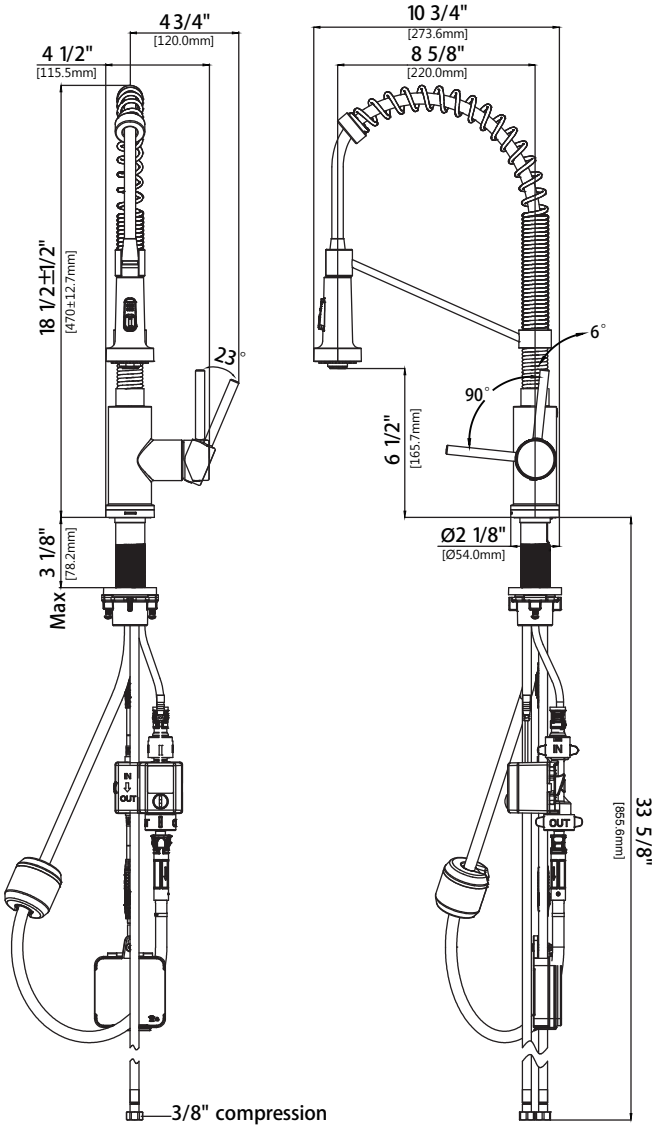

Installer Tip:

Shut off main water supply before installing new faucet

Step 1: Remove mounting hardware

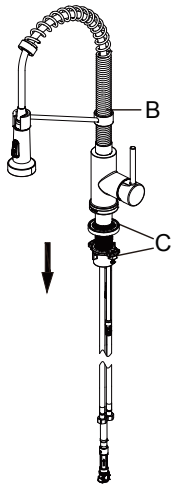

Shut off the water supply. Remove the old faucet. Clean the mounting surface. Remove mounting hardware (C) from faucet body (B).

Step 2: Securing the faucet assembly

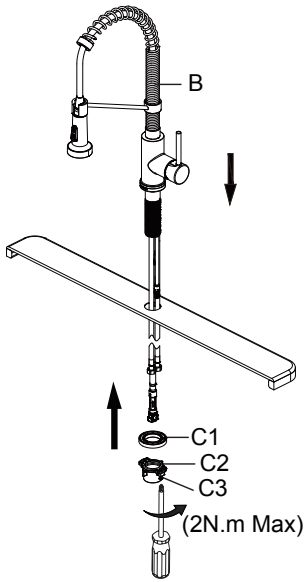

Insert faucet body (B) through the hole in the sink or countertop.
Install the washer (C1) onto the threaded mounting shank.
Thread the nut (C2) onto the mounting shank. Lock the nut (C2) into position by tightening the screws (C3). Do not overtighten.

NOTE: Before installation, it is necessary to keep the sink or countertop dry. The maximum dimensions accommodated by the metal sink are 33" × 22". Otherwise, the faucet touch sensor may be inadvertently activated when touch the handle or spray.

Step 3: Installing the control box

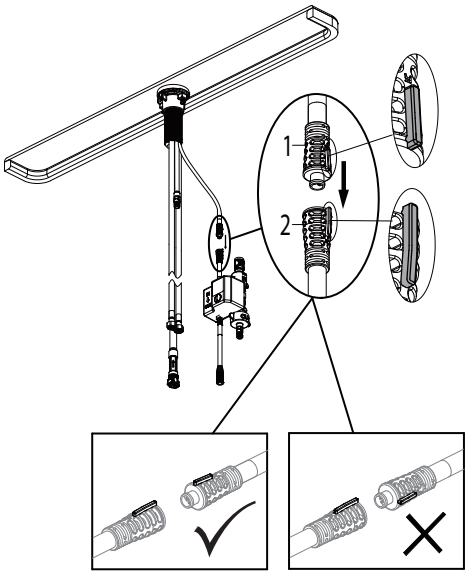

Insert the data cable (1) to the control box connection (2). Ensure the obvious protrusion on the data cable and control box connection are aligned to one another to ensure proper installation. Ensure they are tightly connected by firmly pushing together.

CAUTION: If the connections are not made properly, the faucet will not work.

Step 4: Installing the control box

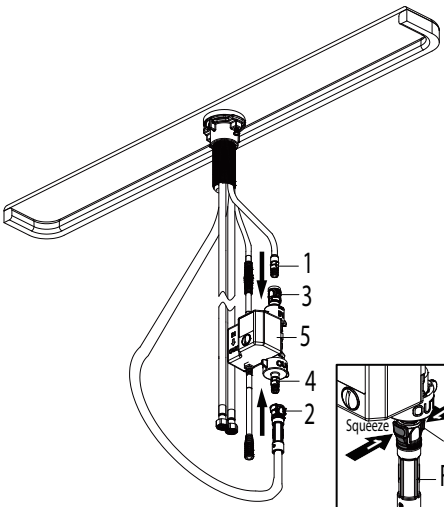

Connect the hose (1& 2) to the connector (3 & 4) on the control box (5). Push firmly together until they snap into place.
If it is necessary to remove the quick connector (F), squeeze the tabs (2) on the quick connector and then pull down to disconnect. (Fig.1)

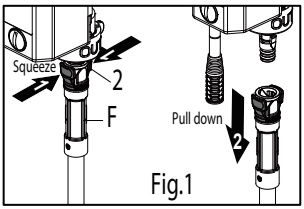

Fig.1

Step 5: Securing the faucet assembly

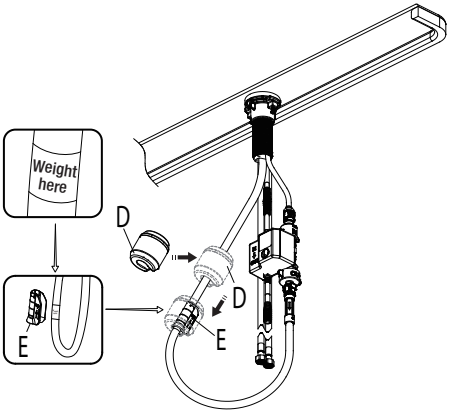

Install the weight clip (E) at the point of the hose marking "weight here". Insert the weight (D) onto the weight clip (E) by sliding it down onto the weight clip (E).

Step 5: Securing the faucet assembly (continued)

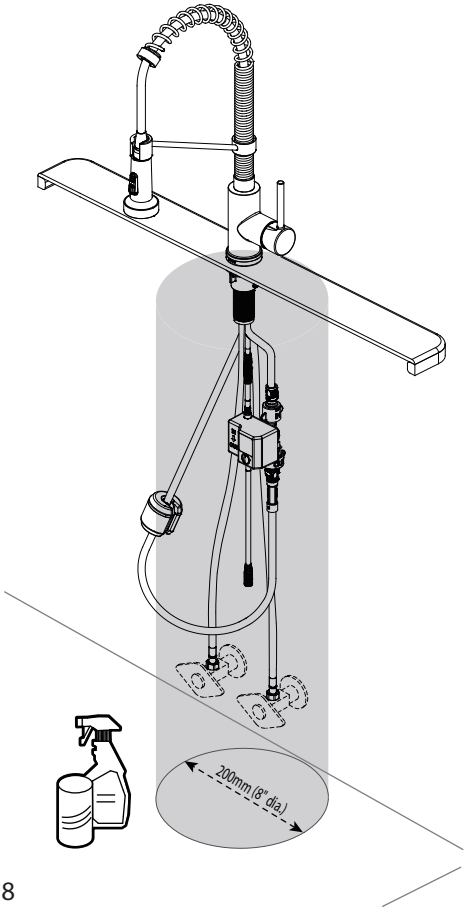

For the best performance of your new pull down faucet, recommends the following:
a. Maintain 8" diamter (200 mm) clear area for the hose and weight to travel, free of any moveable items including (bottles, cleaning supplies,etc.). See illustration.
b. Periodically check to be sure no obstructions have entered this clear zone, and hose weight slides freely.

NOTE: Do not place objects in shaded areas.

Step 6: Installing the battery pack

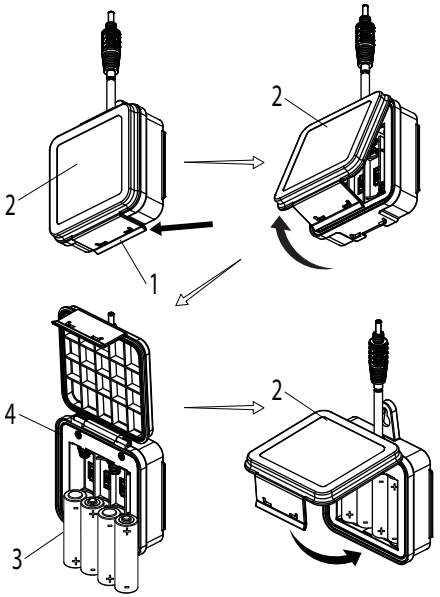

To open the battery housing, push the tabs (1) on the cover (2), open the cover. Install the four AA batteries (3) included by matching the positive (+) and negative (-) ends on the battery (3) to the (+) and (-) markings in the battery pack (4). The negative ends of the battery (3) should always connect to the spring end of the battery slots in the battery pack (4). Reinstall the battery pack cover (2) by snapping into place.

NOTE: When the light flashes 10 times continuously and slowly, the batteries have lost their charge. Replace the batteries (3).

Step 7: Installing the battery pack

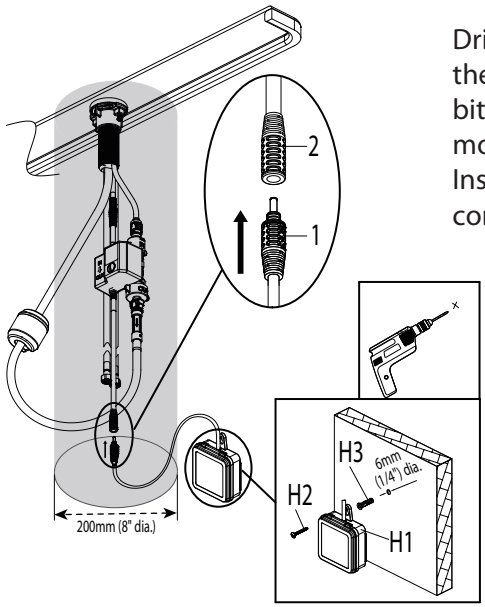

Drill a hole (stay away from shaded ares) in the wall using a 6mm (1/4 in.) diameter drill bit. Install the battery pack (H1) using the molly anchor (H3) and screw (H2) provided. Insert the battery pack cable (1) into the control box connection (2).

NOTE: After installing the battery pack, the light on the flange will flash and the faucet will sound when you touch the appearance of the faucet (excluding the handle, flange and sprayhead). If not, check to ensure the batteries are installed correctly.

Step 8: Connect waterlines to main valve

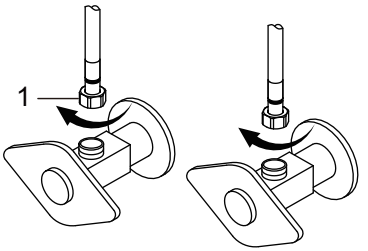

Thread the nut (1) on the supply line onto the outlet of the water supply valve and tighten with a wrench. Do not overtighten.

NOTE: Please make sure filter washers are installed before connecting to the main valve.

Step 9: Flush faucet

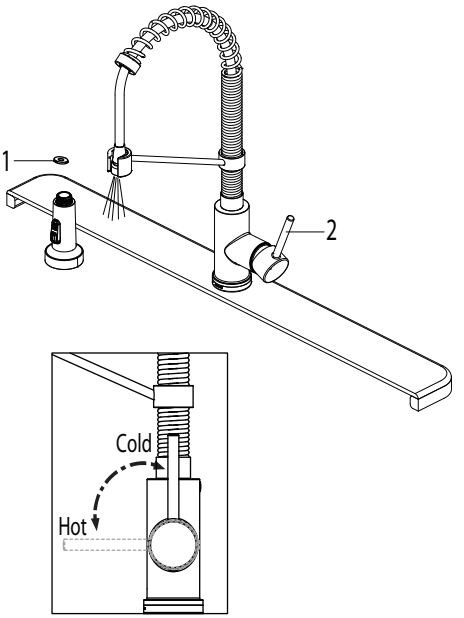

Flushing and checking for leaks: After the installation is complete, unscrew and remove the spray head in order to flush the line. Turn on the water supply and open the handle (2) outward, then touch the appearance of the faucet (excluding the handle, flange and sprayhead), and the faucet will release water. Allow both hot and cold water to run for at least one minute each. This flushes away any debris that could cause damage to internal parts. Check for leaks. If you discover any leaks, check your connections to ensure they are installed properly. Touch again and the water flow will stop. Re-attach the spray head. Do not lose the gasket (1) in the hose.

NOTE: Please make sure washer is installed attaching spray head to hose.

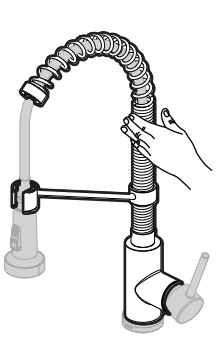

Touch the faucet body (excluding the handle, flange and sprayhead) to activate the water flow.

Turn the handle (2) away from the faucet to the full on position. Move handle towards you and away from you, the water flow pattern can be switched from the hot water to cold water. If the faucet does not work, then you can refer to the troubleshooting.

NOTE: The faucet is active only when the handle is in the ON position. As a water saving feature, the water will turn off automatically after 3 minutes of continuous flow.

Replacement Parts

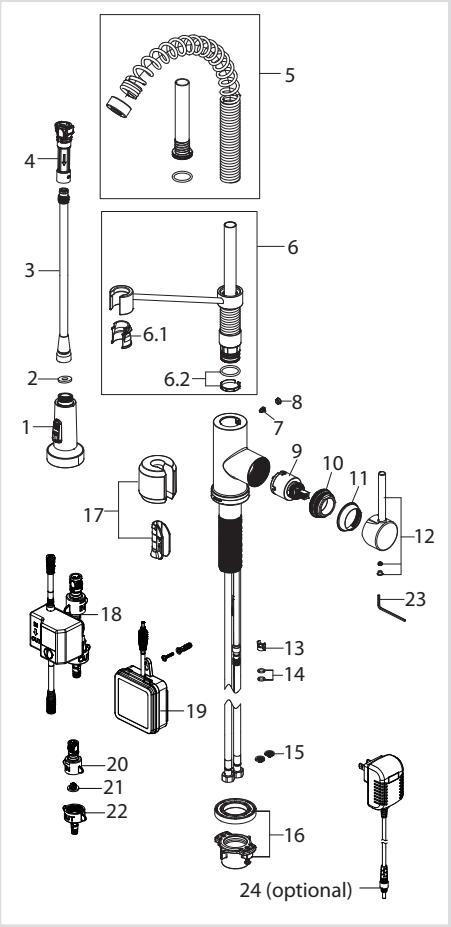

Replacement Parts List	Finish / Color	Part #
1. Sprayer	SFS, MB, SFACB, SFBB**	KP27518
2. Screen Washer		KP27519
3. Sprayer Hose	BLMB, GRSFS, BLSFBB, BLSFACB, BLSFS*	KP27660
4. Quick Connector Assembly		KP27521
5. Spring Assembly	SFS, MB, SFACB, SFBB**	KP27322
6. Sprayer Holder Assembly	SFS, MB, SFACB, SFBB**	KP27597
6.1. Inverter		KP27598
6.2. Wearable Ring & O-ring Assembly		KP27085
7. Set Screw		KP27084
8. Index	BL, GR**	KP27124
9. Cartridge		KP27522
10. Bonnet Nut		KP27082
11. Cap	SFS, MB, SFACB, SFBB**	KP27081
12. Handle Assembly	SFS, MB, SFACB, SFBB**	KP27072
13. Block		KP27073
14. O-ring		KP27092
15. Filter Washer		KP27248
16. Mounting Hardware		KP27600
17. Weight & Clip Assembly		KP27523
18. Control Box		KP27599
19. Battery Housing		KP27601
20. Inlet Connector		KP27190
21. Filter Washer		KP27189
22. Outlet Connector		KP27191
23. Hex Wrench		KP27020
24. AC Adapter (optional)		KP27187

*Denotes spray hose assembly color options:
Spray hose assembly color options: Black hose with pot Free Brushed Brass (BLSFBB), Black hose with Matte Black connector (BLMB), Black hose with Spot-Free Stainless connector (BLSFS), Gray hose with Spot-Free Stainless connector (GRSFS), Black hose with Spot-Free Antique Champagne Bronze (BLSFACB)

**Denotes faucet component color options:
SFBB -Spot Free Brushed Brass
MB - Matte Black
SFS - Spot Free Stainless Steel
SFACB - Spot Free Antique Champagne Bronze
BL - Black
GR- Grey

Troubleshooting

If you have followed the instructions carefully and your faucet still does not work properly, take the following corrective steps:

Problem 1: Water will not shut off when turning the handle to the OFF position.

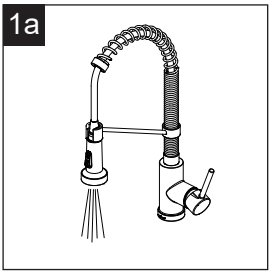

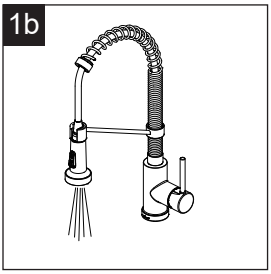

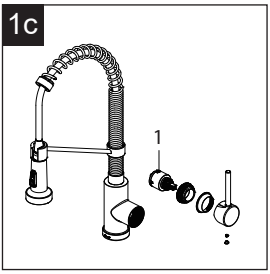

When you turn the handle to he full on position, touch the appearance of the faucet (excluding the handle, flange and sprayhead), and the faucet will release water. But when you turn the handle to the full off position, the water does not turn off.

This indicates that the cartridge is damaged. Turn off the water supply, remove the handle and replace the cartridge (1).

Problem 2: The light on the flange is flashing continuously.

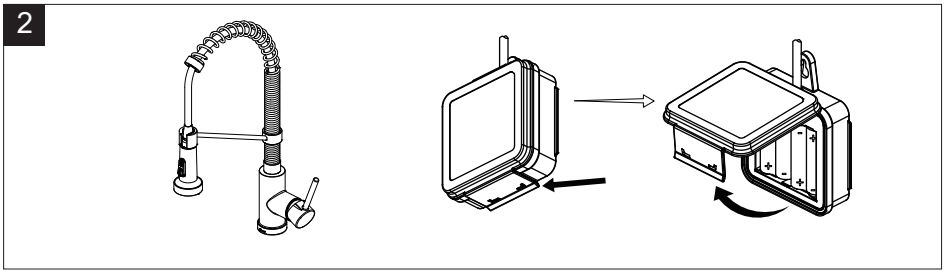

If the handle is closed, turn the handle to the on position and touch the appearance of the faucet (excluding the handle, flange and sprayhead). If the light flashes 10 times continuously and slowly, then replace the 4 “AA” batteries.

Problem 3: There is a low flow of water or LED indicator in the faucet body is not functioning.

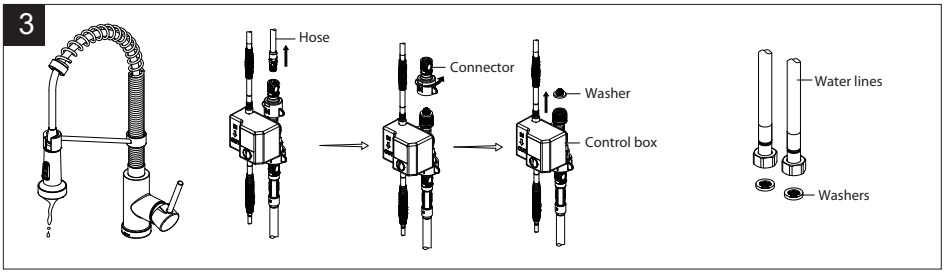

a. This could indicate that the washer in the control box is dirty or damaged. Remove the hose and unscrew the connector. Take out the washer from the control box. Clear the washer or replace the washer. Reassemble the connector and hose.

b. The filter washers (15 & 21) are dirty. Turn off the water supply at the water valves and unscrew the hose connectors from the water supply lines. Clean the filter washers in the water lines with hot water, removing any debris or calcium build up.

Problem 4: When you turn the handle to the full on position, touch the appearance of the faucet (excluding the handle, flange and sprayhead), and the faucet will not release water.

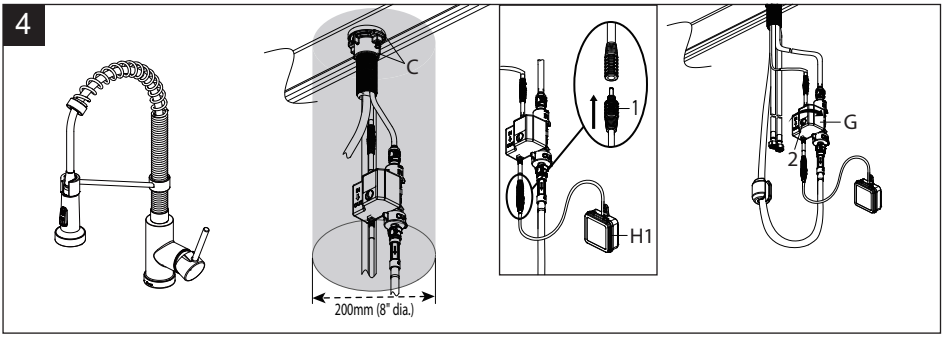

a. There are debris in the shaded area, causing the joint connection to loosen. Check if the connections in installation steps 3, 4 and 7 are loose.
b. Unplug the date cable (1) from the battery pack (H1) and reconnect it after 10 seconds.
c. Check whether the switch button (2) is tight, if it is loose, tighten the switch button (2) completely with a coin clockwise. If the switch button (2) is tight, this indicates that the control box (G) is damaged. Call customer service to request a replacement control box. Replace the old control box with the new control box.

Problem 5: The function of the switch button.

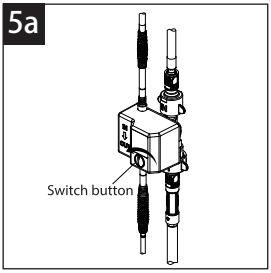

If you want to use the faucet without the touch feature, you can loosen the switch button completely with a coin counterclockwise. At this time, you can use the touch faucet just like a regular kitchen faucet.

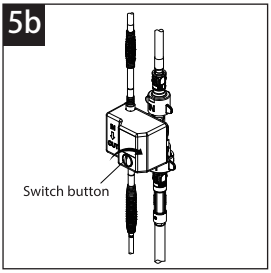

However, if you want to continue to use the faucet with the touch feature, you need to tighten the switch button completely with a coin clockwise. At this time, you can use the faucet with the touch feature.

Codes/Standards Applicable:

NSF/ANSI 372 NSF/ANSI/CAN 61: Q ≤ 1 LEAD FREE

NSF/ANSI 61

ASME A112.18.1
1.8GPM 6.8L/min maximum

Faucet - Lifetime Limited Warranty

Kraus® USA Plumbing, LLC ("Kraus") extends this warranty to the original purchaser for personal household use of the Faucet when purchased from an authorized Kraus dealer and in the location of original installation. This warranty is non-transferable.

Kraus warrants the structure and finish of the Faucet to be free from defects in material and workmanship under normal usage for as long as the original purchaser resides in the residence in which the Faucet was first installed.

Kraus warrants the Faucet's sprayhead assembly (including the engine, aerators, structure, restrictors, back flow preventers, sprayer hoses, braided supply line hoses which encompasses nylon, silicon and stainless steel) of the product to be free from defects in material and workmanship under normal usage for a period of one (1) year from the date of purchase.

Kraus warrants the Faucet's cartridge to be free from defects in material and workmanship under normal usage for a period of five (5) years from the date of purchase.

Any product reported to the authorized dealer or to Kraus as being defective within the warranty period will be repaired or replaced with a product of equal value at the option of Kraus.

Commercial Warranty

Kraus USA Plumbing, LLC ("Kraus") warrants its Products for a period of one (1) year to commercial purchasers of Products used in industrial, commercial and business applications.

Care and Cleaning Instructions

Certain cleaning products may cause damage to a Product's finish and use of the following on the Product will void this warranty:

- Abrasive cleaners such as powders, bleach, ammonia, alcohol or chorine
- Abrasive pads, steel wool or wire brushes

What is Not Covered

This warranty does not cover Products that were discontinued when purchased or display Products, whether such Products were purchased at discount outlets, unauthorized dealers, and/or sold on clearance. This warranty does not cover any free gifts included with purchase.

This warranty does not cover damage resulting from neglect, misuse (including use for an unintended application), abuse, carelessness, accident, hard water or mineral deposits, exposure to corrosive materials, improper maintenance, alteration of the Product, or failure to follow care, cleaning or installation instructions enclosed with your Product. Kraus recommends that all Kraus Products be installed by a fully licensed and insured trade professional with experience in the installation of bathroom and/or kitchen manufactured goods.

How to Make a Warranty Claim

If you are a **consumer purchaser**, please contact a Kraus® Customer Service Representative at:
Kraus USA Plumbing, LLC
12 Harbor Park Drive
Port Washington, NY 11050
Toll-free 800-775-0703
Customerservice@kraususa.com

If you are a **plumbing contractor or trade professional**, please contact a Kraus Pro Representative at:
Kraus USA Plumbing, LLC
12 Harbor Park Drive
Port Washington, NY 11050
516-801-8955
Proservice@kraususa.com

If you are an **authorized partner**, please contact a Partner Support Representative at:
Kraus USA Plumbing, LLC
12 Harbor Park Drive
Port Washington, NY 11050
516-801-8954
Partnersupport@kraususa.com

In requesting warranty service, please be ready to provide your proof of purchase and a description of the problem. Shipping charges will be covered for the first (1) year of the warranted replacement part or product (HI, AK, and Puerto Rico shipping charges may apply). International shipping fees are not included.

Limitation on Duration of Implied Warranties

Please note that some states/provinces (including Quebec) do not allow limitations on how long an implied warranty lasts, so the below limitations may not apply to you. TO THE MAXIMUM EXTENT PERMITTED BY APPLICABLE LAW, ANY IMPLIED WARRANTY, INCLUDING THE IMPLIED WARRANTIES OF MERCHANTABILITY AND OF FITNESS FOR A PARTICULAR PURPOSE, IS LIMITED TO THE STATUTORY PERIOD OR THE DURATION OF THIS WARRANTY, WHICHEVER IS SHORTER.

Limitation of Special, Incidental or Consequential Damages

Please note that some states/provinces (including Quebec) do not allow the exclusion or limitation of special, incidental or consequential damages, so the below limitations and exclusions may not apply to you. TO THE MAXIMUM EXTENT PERMITTED BY APPLICABLE LAW, THIS WARRANTY DOES NOT COVER, AND KRAUS USA PLUMBING, LLC SHALL NOT BE LIABLE FOR, ANY SPECIAL, INCIDENTAL OR CONSEQUENTIAL DAMAGES (INCLUDING LABOR CHARGES TO REPAIR, REPLACE, INSTALL OR REMOVE THIS PRODUCT), WHETHER ARISING OUT OF BREACH OF ANY EXPRESS OR IMPLIED WARRANTY, BREACH OF CONTRACT, TORT, OR OTHERWISE.

This warranty gives you specific legal rights, and you may also have other rights which vary from state/province to state/province.

Download the Kraus Care & Maintenance Guide at:
http://www.kraususa.com/maintenance

IMPORTANT

Register Your Kraus Product

Activate Your Warranty

Access Premium Customer Support

Get Product Information

REGISTER TODAY

http://www.kraususa.com/registration

Kraus®

www.kraususa.com