Kraus®

MODEL-KHF-200-33

Product Description and Measurements

Kitchen stainless steel sink

- ★ **Kraus Collection**
- ★ **16 Gauge Stainless Steel**
- ★ **Overall Size: 32 7/8" X 20 3/4 X 10"**
- ★ **20mm/0.75 Radius Coved Corners**
- ★ **Apron single bowl kitchen sink**

In Accordance with Industry Codes & Standards for USA & Canada
All Kraus Stainless Steel Kitchen Sinks are Certified & Listed By cUPC.

Thank You

Dear Valued Customer,
Kraus would like to take this opportunity to thank you for this purchase. It is our sincere hope that you are completely satisfied with your new product. We welcome any questions or comments that you may have and look forward to assisting you with your accessory needs in the future.

Sincerely,
Kraus customer service department.

Prior To Installation Steps

1. Unpack your new product and ensure that all the parts are contained in the packaging.
2. Keep the product in its original box until you ready to install it.
3. The counter top must be flat.
4. Shut off the water supply if replacing a previously-installed vessel sink.
5. Observe all plumbing and building codes in your area.
6. It is recommended that installation of the product be done by a professional plumber.

 Copyright ©2008 - 2009, Kraus USA Inc.

Kraus®

Rough-In Dimensions

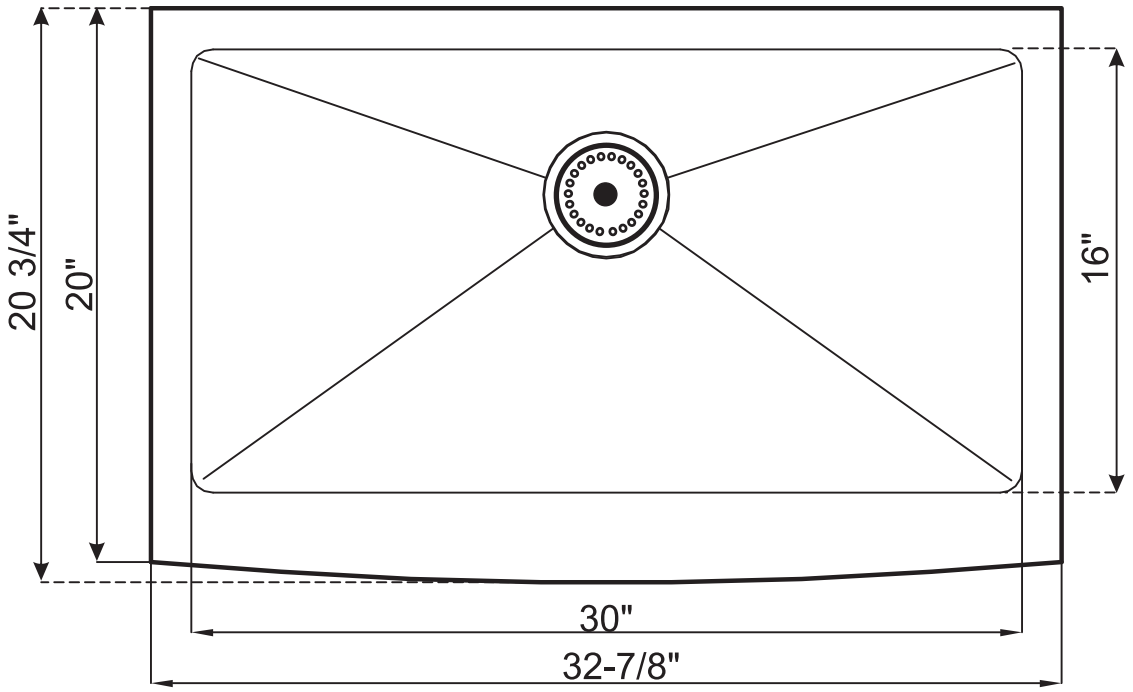

Diagram

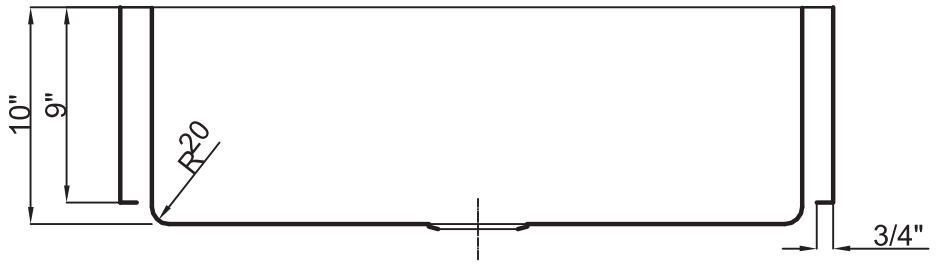

Contact us toll-free at 1-800-775-0703; or visit our website at www.kraususa.com. Copyright ©2008 - 2009, Kraus USA Inc.

Kraus®

Built-Up Sinks

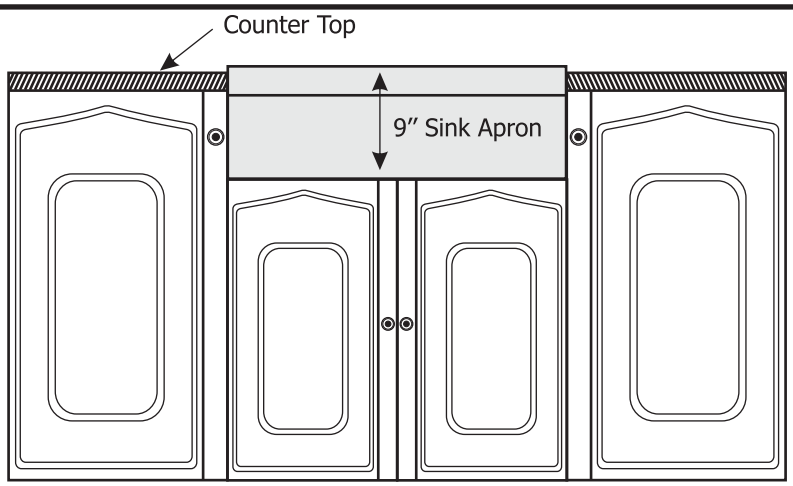

Bow (Curved) Front

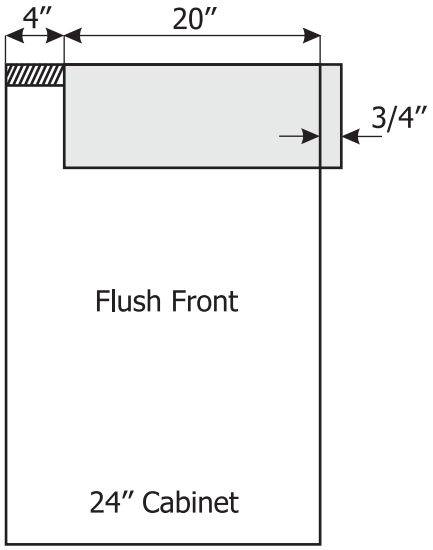

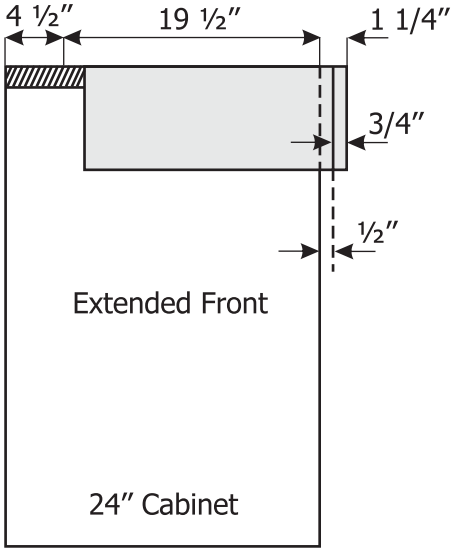

Flush Front Installation

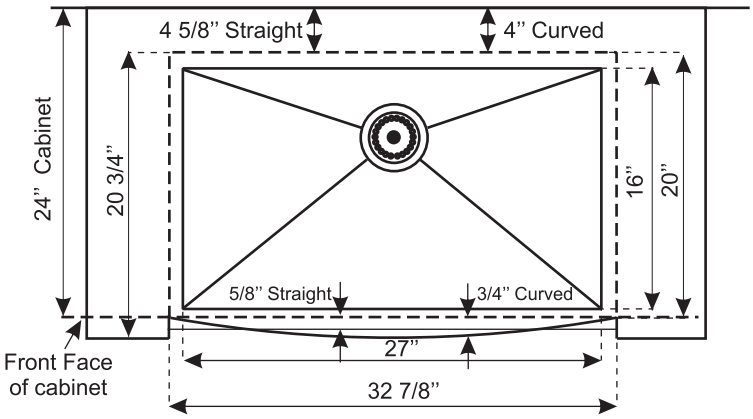

UNDERMOUNT SINK

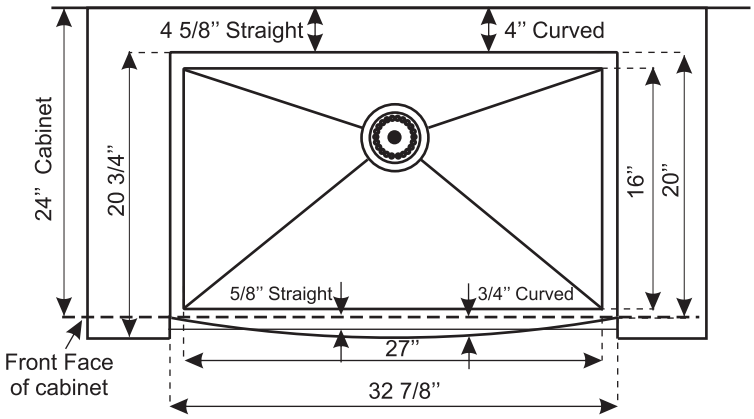

BUILT-UP SINK

 Copyright ©2008 - 2009, Kraus USA Inc.

Kraus®

Product Use & Care

A Kraus Guide to Use and Care of Stainless Steel Sinks

"The Do's"

- When it comes to maintenance, the best thing you can do is be consistent in your cleaning. It is preferable to clean a little on a frequent basis than a heavy duty cleaning once in a while.
- You should make sure that the sink is always clean and dry when not in use. This is the best method of preventative maintenance. Keep the sink water spot free and shiny by rinsing and towel drying after every use.
- Keep the single clog free to prevent standing water which can lead to mineral deposit build up.
- If a mineral build up should occur, use a mixture of vinegar and hot water to remove the deposit.
- To clean your sink, use a non abrasive cleaning cloth combined with a mild cleaning procedure.
    - Use a soft cloth and liquid detergent on a mirror finish deck.
    - DO NOT USE ANY ABRASIVE MATERIALS ON A MIRROR FINISH.
    - For tougher stains use a mild abrasive cleaner like Ajax or Comet.
- Wipe the sink dry after cleaning to discourage any water spotting.
- Follow the direction of the grain when cleaning or scrubbing away stains. Scrubbing against the grain will show as a scratch.

"The Don'ts"

- Avoid using any abrasive steel wood pads as they will leave an iron residue that will eventually lead to rust and corrosion.
- Do not leave any steel or cast iron cookware in the sink for a long period of time. This may also leave iron particles that will corrode the sink
- Do not leave any cleaning materials such as sponges or rags in the sink for an extended period of time. Anything left in the sink can trap moisture which will eventually lead to staining
- Avoid using any abrasive cleaning materials such as steel wool pads on the polished finish of the sink, this will lead to scratching.

About Kraus

Kraus is a leading designer and manufacturer of a broad selection of unique bathroom fixtures and accessories, including vessel sinks, faucets, showers, vanities and bathroom accessories. Kraus incorporates its distinguished style with superior functionality and affordability maintaining the highest standards of quality in its vast product line.

The Kraus brand name represents a fusion of leading-edge technology and an eye toward design. Our design team continuously explores broader markets,seeking new trends while maintaining superior quality at unprecedented prices. The Kraus collection has the widest selection of exquisite styles for any type of décor, ranging from modern residences to countryside homes.

For Kraus, durability and reliability have always been vital components for achieving the highest standards of excellence. Every model we offer undergoes rigorous testing and inspection prior to distribution.
The key element of our success is our customers' satisfaction. As a result, our products are in high demand with shoppers worldwide.

 Copyright ©2008 - 2009, Kraus USA Inc.

Installation Instruction

Single Handle Pull–down Kitchen Faucet

Before Your Installation

Check to make sure you have the following parts indicated below:

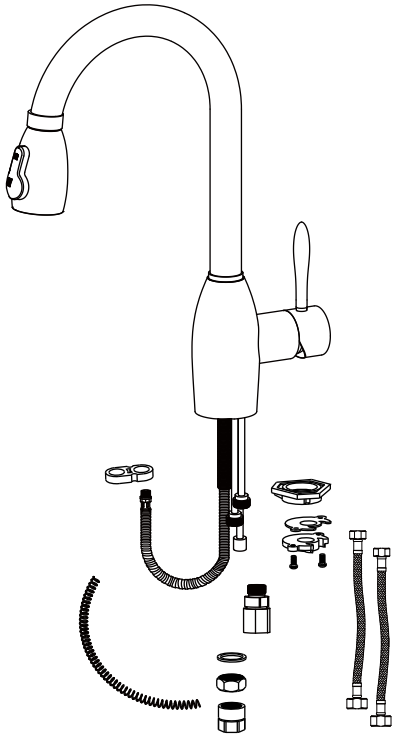

Tools You Will Need

Adjustable wrench

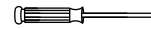

Phillips screwdriver

Adjustable wrench

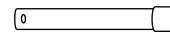

Spanner for body
(supplied)

Spanner for aerator
(supplied)

Replacement Parts

Keep this manual for ordering replacement parts.

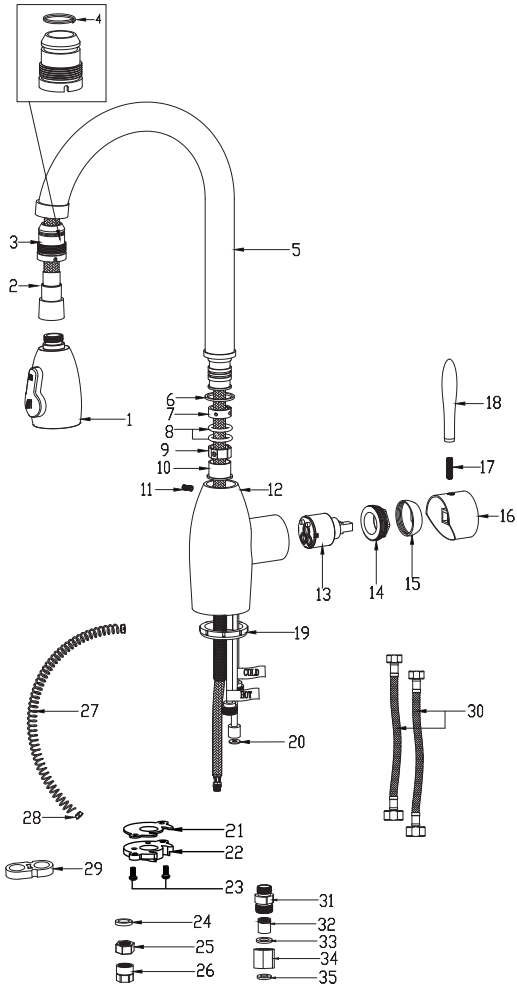

NO	NAME
1.	Sprayer
2.	Black nylon hose
3.	Locating sleeve
4.	Steel ring
5.	Spout
6.	Anti–friction ring
7.	Plastic retainer ring
8.	O–ring
9.	Plastic retainer ring
10.	Noise silencer
11.	Screw
12.	Faucet body
13.	Cartridge
14.	Locking nut
15.	Cartridge cover
16.	Handle knob
17.	M6 screw
18.	Handle bar
19.	Bottom rubber
20.	Flat gasket
21.	Locking rubber
22.	Locking gasket
23.	Screw
24.	Locking gasket
25.	Locking nut
26.	Nut
27.	Spring
28.	Sleeve
29.	Plastic stop collar
30.	Hose
31.	Sleeve nut
32.	Check valve
33.	Flat gasket
34.	Sleeve
35.	Flat gasket

Product Dimension Drawing

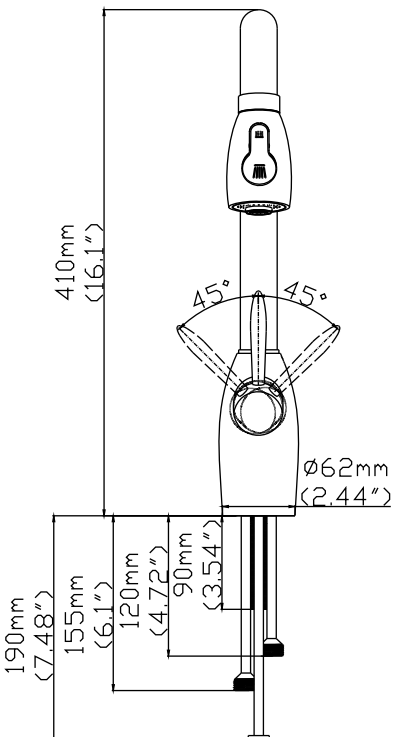

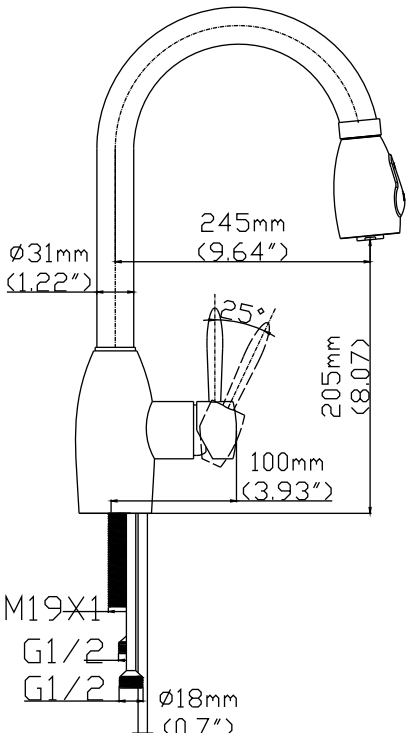

Faucet Installation Procedures

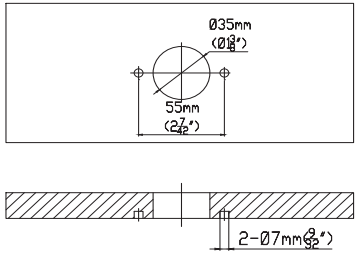

step 1

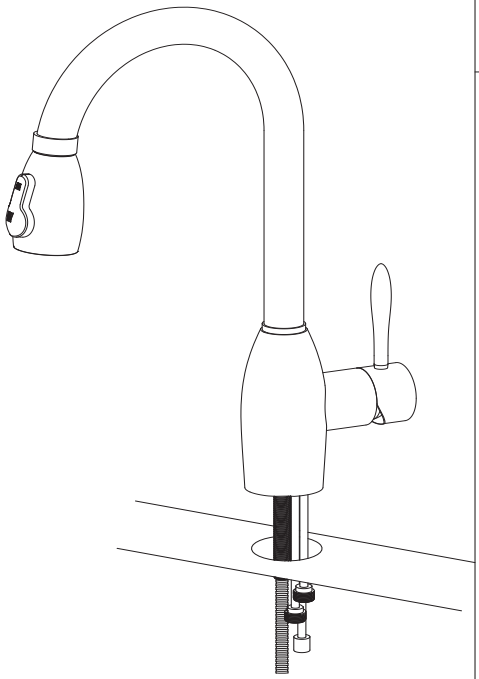

step 2

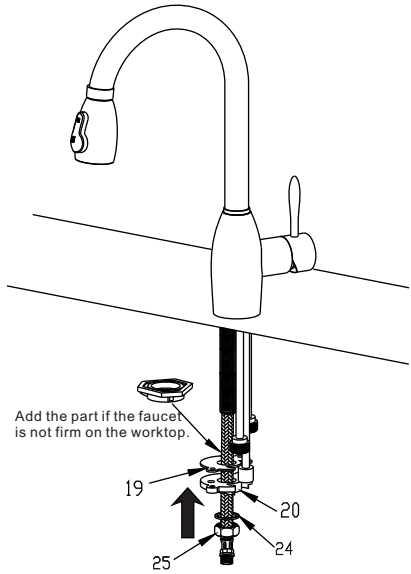

step 3

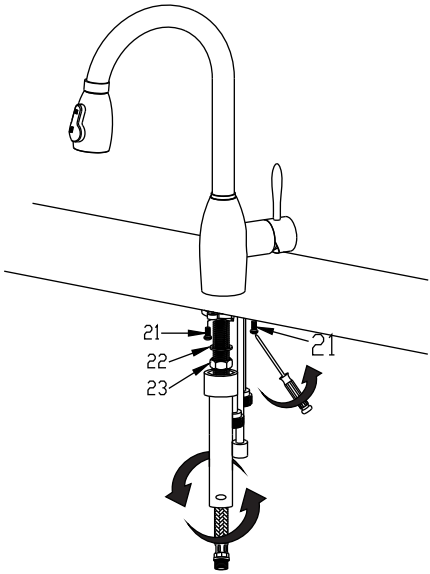

step 4

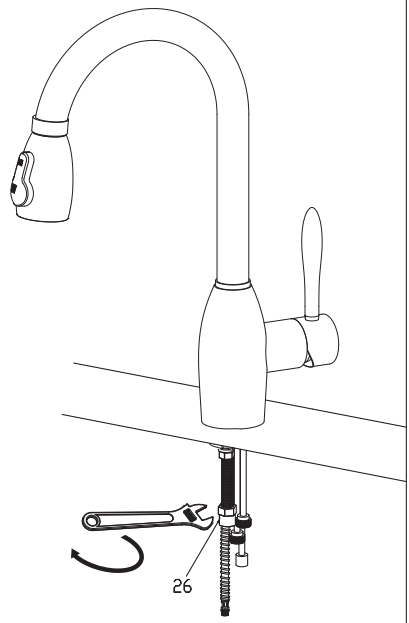

step 5

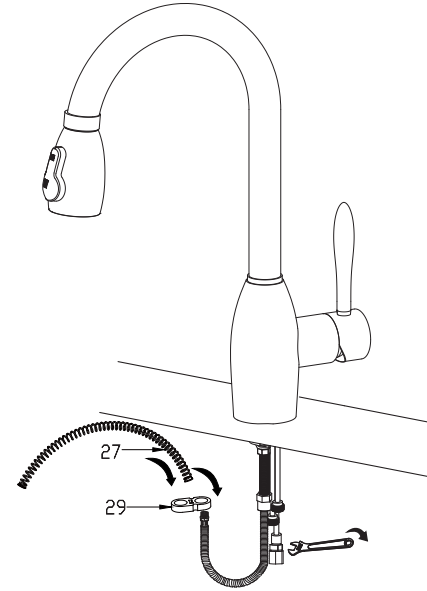

step 6

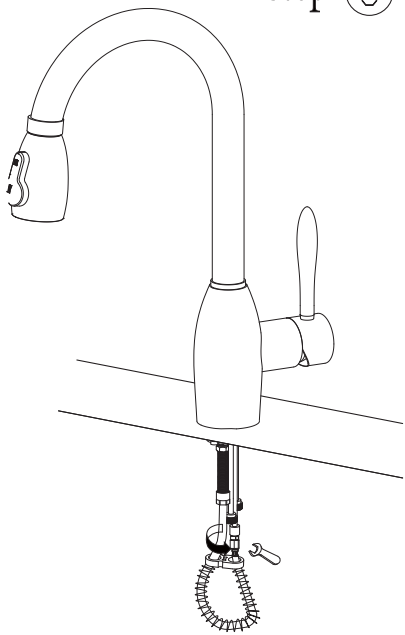

step 7

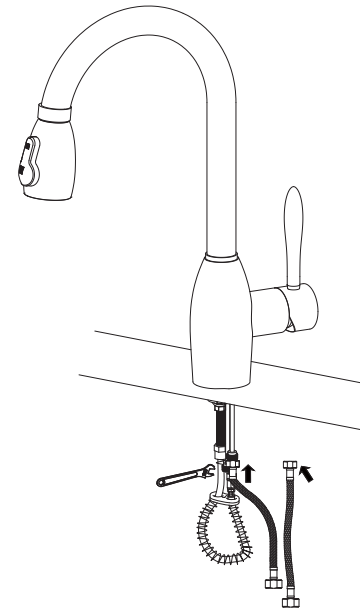

Step ⑧

Step ⑨

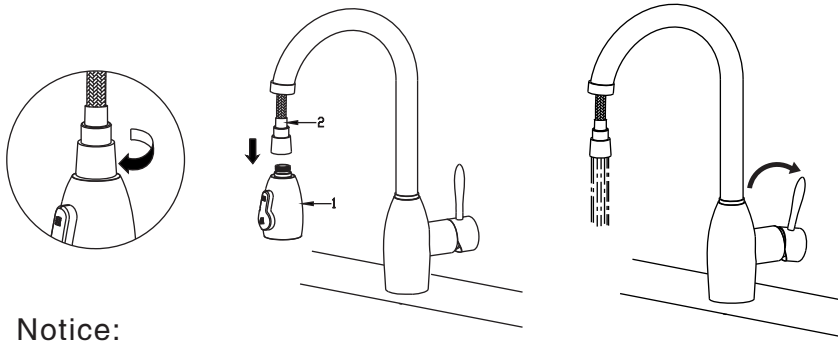

Notice:

Please removing all of the sand, silt and other things from the water hose before assembling, to avoid blocking the faucet and effecting water rate. Please use the special tools to disassemble it and wash with pneumatic equipment, if the faucet blocked.

Step ⑩

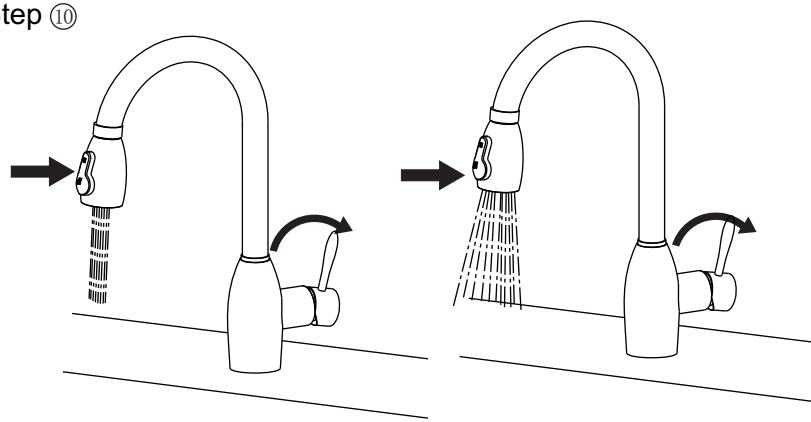

Installation Instruction

Stainless Steel Soap Dispenser

Before Your Installation

Check to make sure you have the following parts indicated below:

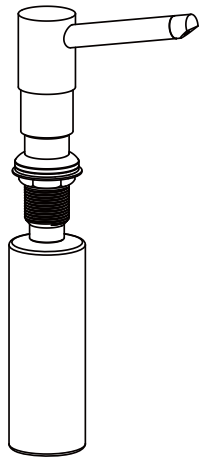

Tools You Will Need

Adjustable wrench

Replacement Parts

Keep this manual for ordering replacement parts.

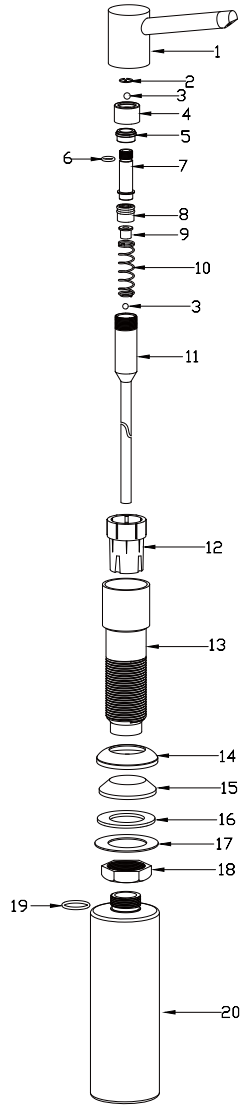

NO	NAME
1.	Spout
2.	Spring ring
3.	6 round bead
4.	Connector
5.	O–ring for tie–in
6.	O–ring
7.	Plunger
8.	Sealing part
9.	Anti–friction gasket
10.	Spring
11.	Straw
12.	Plastic cover
13.	Connector rod
14.	Flange
15.	Plastic part under flange
16.	Washer
17.	Stainless steel washer
18.	Hexagon nut
19.	O–ring
20.	Body

Product Dimension Drawing

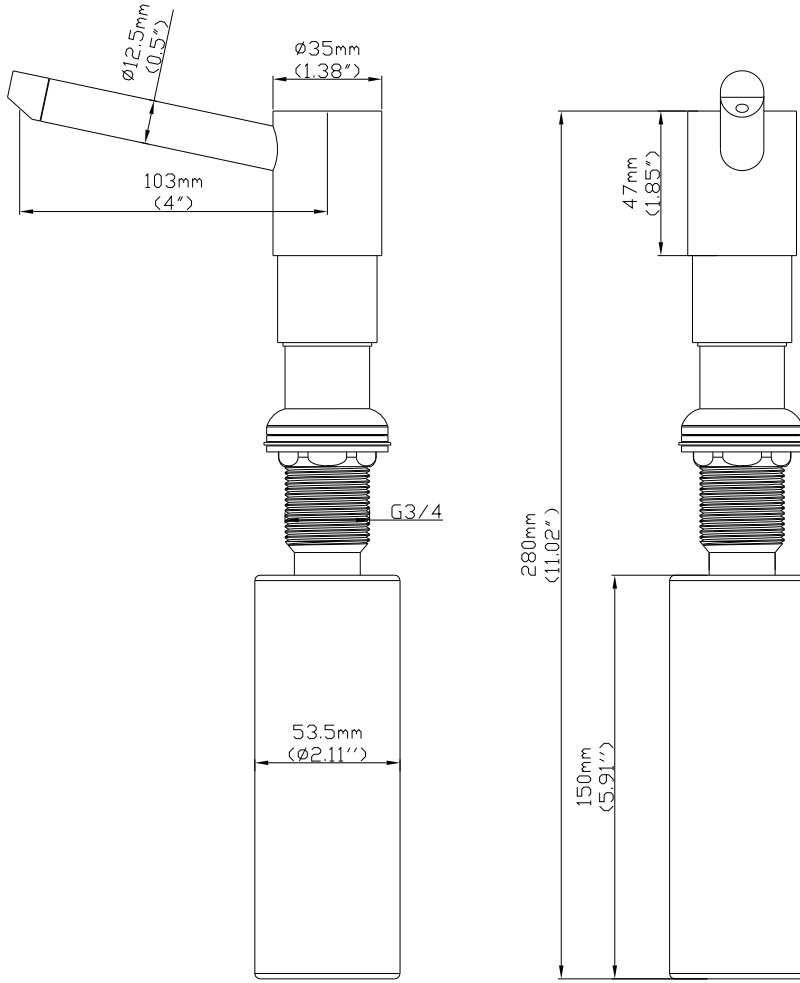

Faucet Installation Procedures

step ①

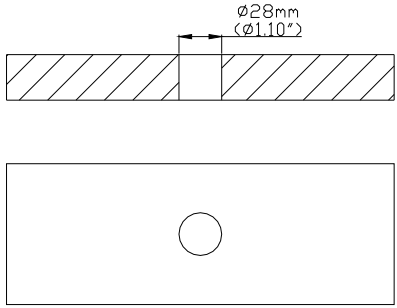

step ②

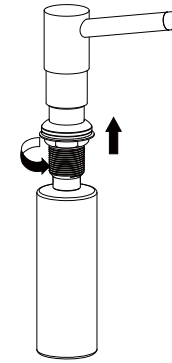

step ③

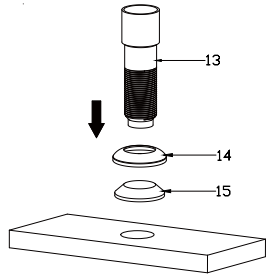

step ④

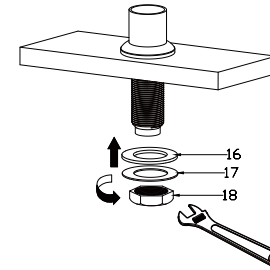

step ⑤

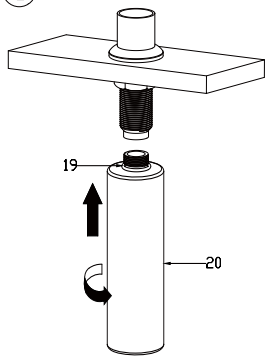

step ⑥

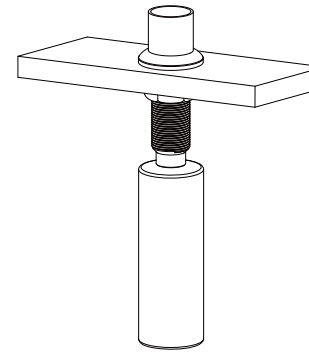

step ⑦

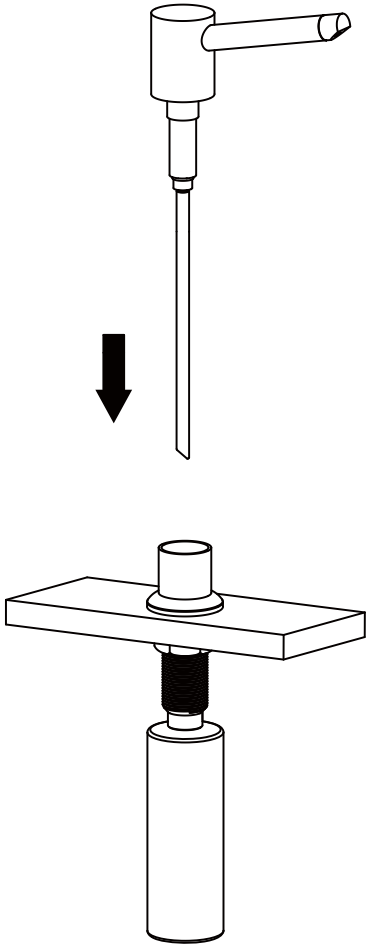
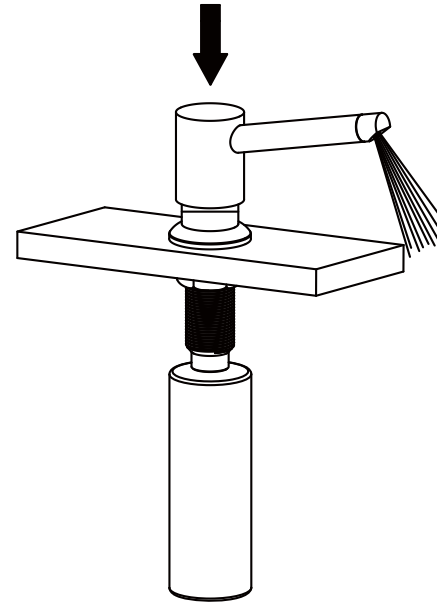
step ⑧