F42D

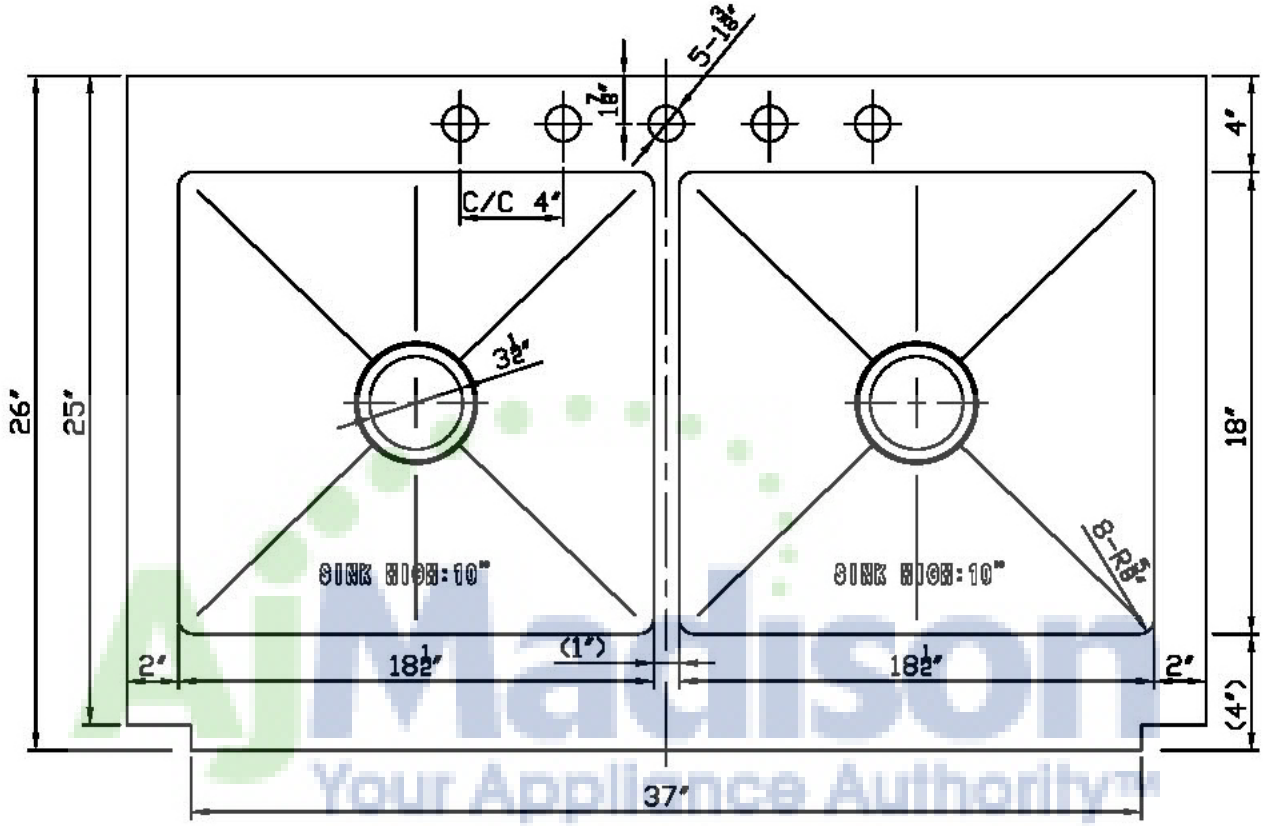

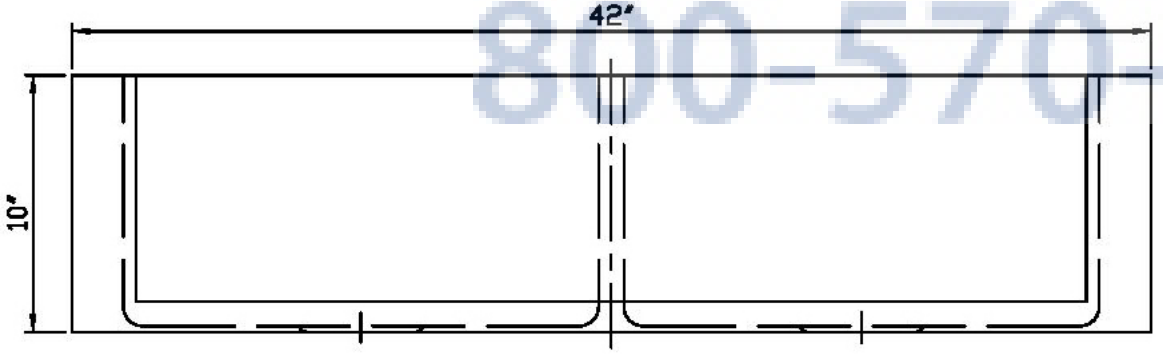

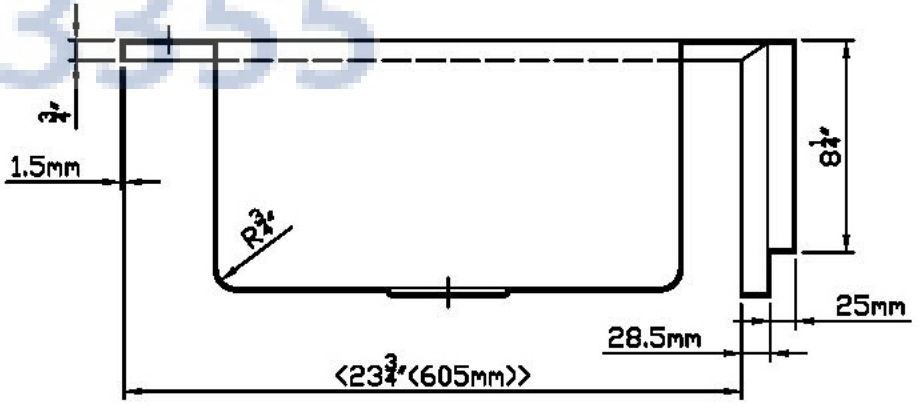

AJ Madison
Your Appliance Authority
800-570-3355