FULGOR MILANO

30” Wall Ovens
100/300 SERIES

Weight & Dimensions

Ltr.	CUTOUT DIMENSION	inch	cm
A	Cutout Width	28”	71cm
B	Cutout Depth	24”	61cm
C	Cutout Height	23”	58,5cm
D	Floor Bottom of Cutout	34”	86,5cm
E	Minimum Spacing	1/2”	1,3cm

PACKAGING		lb / inch	Kg / mm
GROSS WEIGHT		148 lb	67 Kg
DIMENSION	W	32"1/2	825
	D	27"1/2	700
	H	29"1/2	750

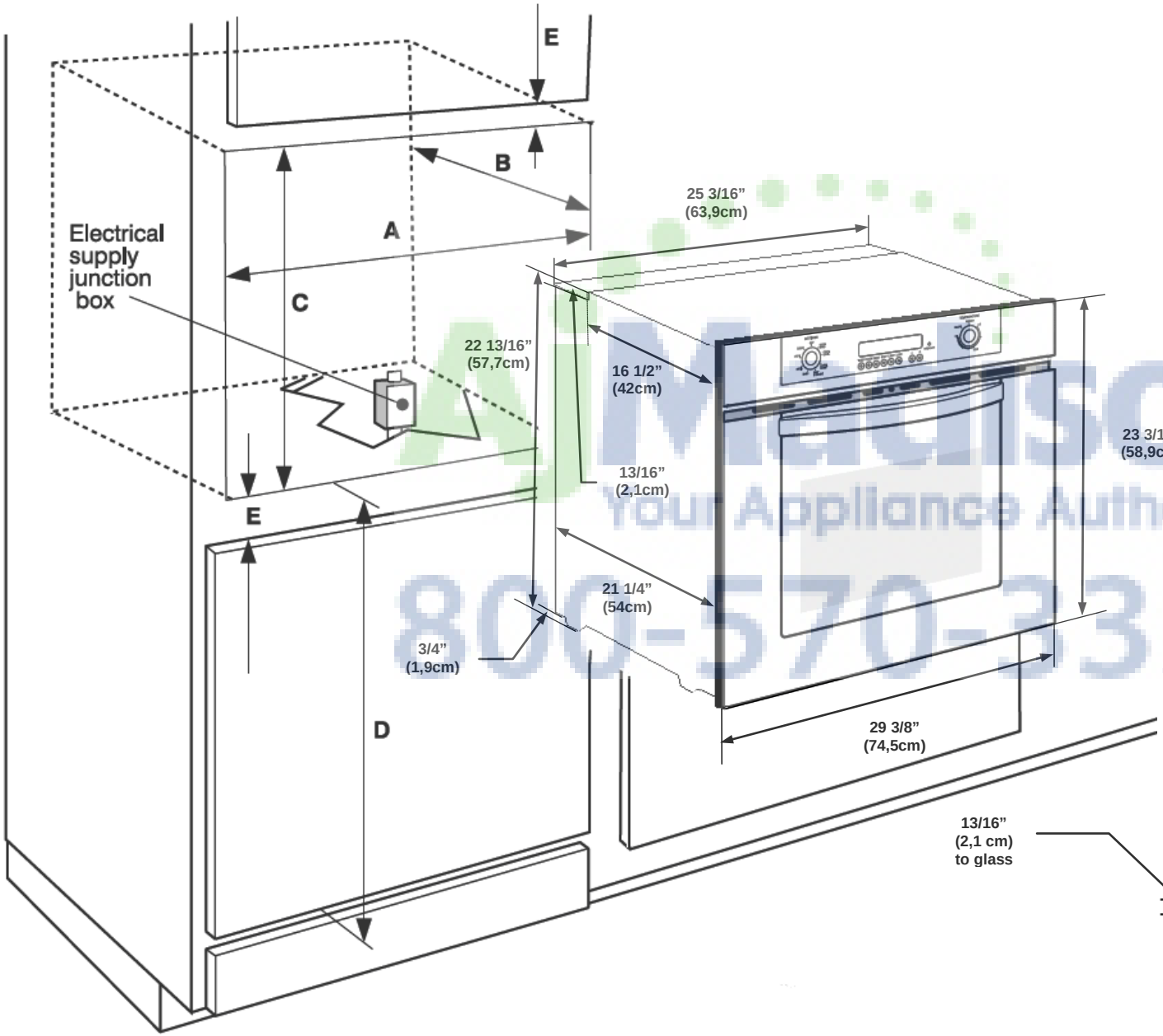

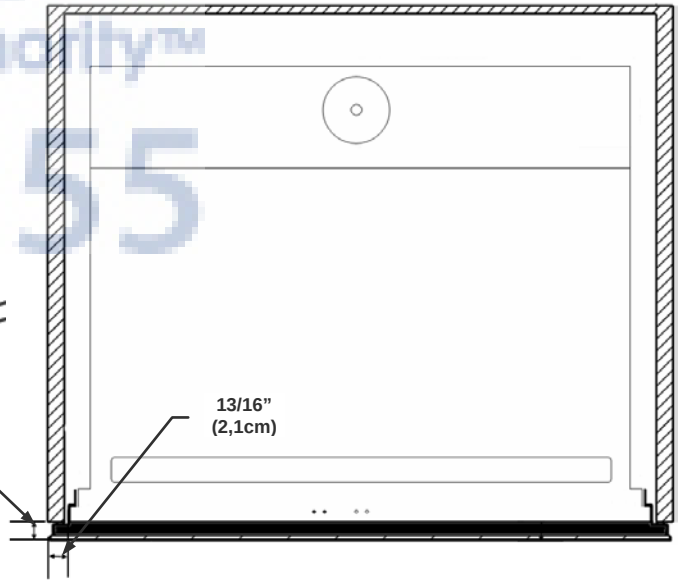

AJMadison
Your Appliance Authority™
800-570-3355