Eos Neo Pull-Down Faucet - EOS-PD-316 | 115.0685.297

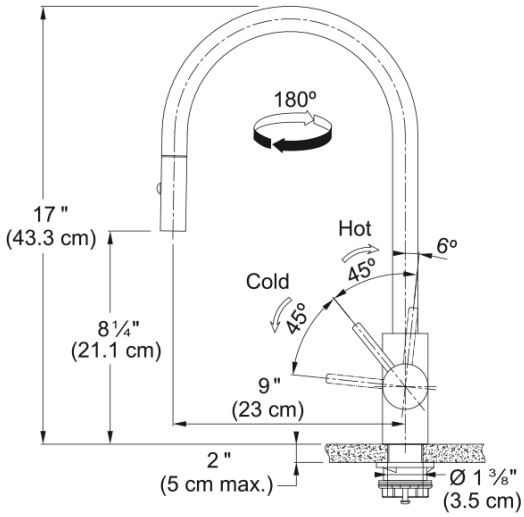

Technical Data

Aspect	
Spout type	J - spout
Color	Stainless steel
Type of material	Stainless steel 316
Flexible pullout hose material	Nylon black
Spray head material	Stainless steel
Product Dimensions	
Faucet hole diameter	35 mm
Cartridge dimension	35 mm
Installation	
Mounting type	Shank
Water supply hose connection	3/8"
Water supply hose length	450 mm
Product specifications	
Pressure	High pressure
Faucet type	Spray
Faucet operation	Side lever
Faucet rotation	180°
Product identification	
Product brand	FRANKE
Product family	Maris
Collection	Eos Neo
Features	
Water saving feature	No
Type of aerator	Laminar