SPECIFICATIONS

EASTHAM™ TWO HANDLE WIDESPREAD LAVATORY FAUCET

Model

D304115

Description

- Ceramic disc valves
- 6 1/8" high spout, 4 3/4" spout length
- Metal lever handles
- With 50/50 Pop-up drain assembly
- 3-hole mount, 6" ~12" installation
- 1.2gpm (4.5L/min) maximum flow rate @60 psi
- Meets CEC Requirement

Flow Rate

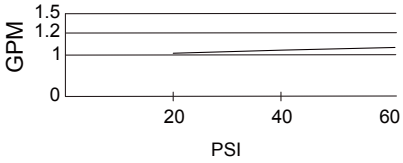

Standards

NSF/ANSI 372

- NSF/ANSI 372

MEETS ASME A112.18.1M/ A112.18.1

- ASME A112.18.1M/A112.18.1

- ADA Accessibility Guidelines for Buildings and Facilities - 309.4 Operation for Operable Parts

- WaterSense Pending

Finishes Available

- Chrome
- Other: Refer to Price List for additional finish

Warranty

Danze products are covered by a manufacturer's limited "lifetime" warranty for manufacturing defects.

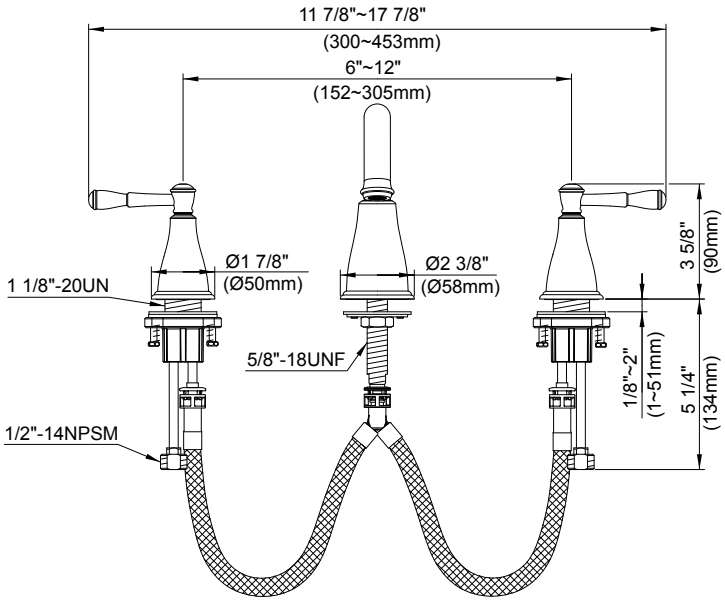

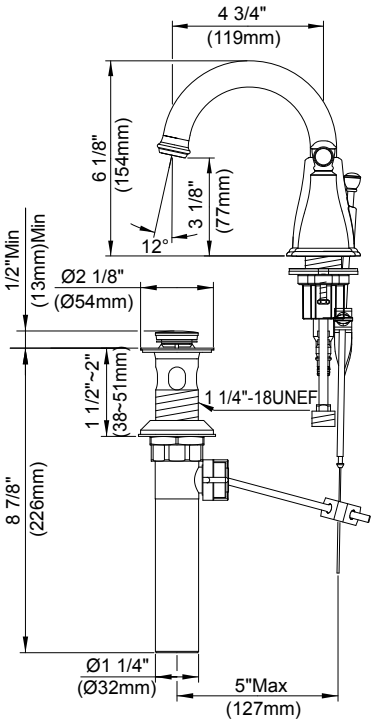

Submittal Information:

Job Name: _____ *Location:* _____

Contractor: _____ *Contact #:* _____