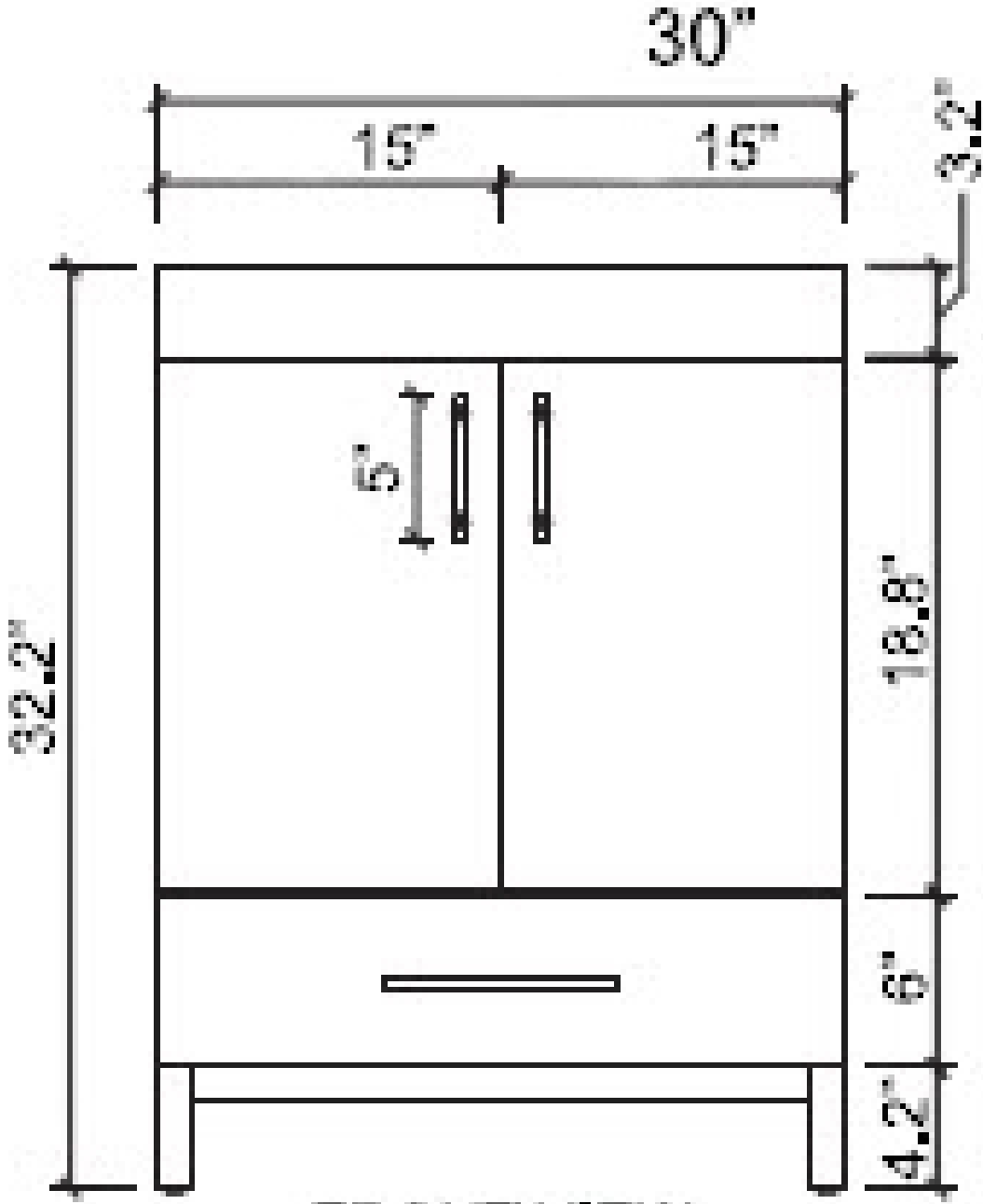


FRONT VIEW