Danze®

SPECIFICATIONS

ANU™ SINGLE HANDLE PULL-DOWN KITCHEN FAUCET

Model

D454520

Description

- Ceramic disc valve
- 18" high spout, 8 ¾" spout length
- 2 function spray/aerated stream
- Quiet running hose with spring retraction
- Single hole mount
- Flow rate: 2.2 gpm @ 60 psi

Standards

NSF Certified to NSF/ANSI 61 Section 9

- NSF 61-9
- Energy Policy Act of 1992

UPC NSF/ANSI 372

- ASME A112.18.1M/A112.18.1
- NSF/ANSI 372

- ADA Accessibility Guidelines for Buildings and Facilities - 4.27.4 Controls and Mechanisms

Warranty

Danze products are covered by a manufacturer's limited "lifetime" warranty for manufacturing defects.

Flow Rate

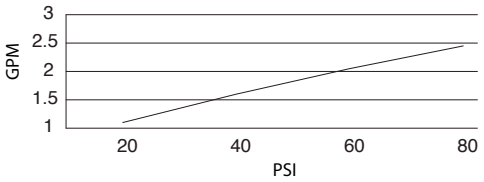

Finishes Available

- Chrome
- Other: Refer to Price List for additional finish

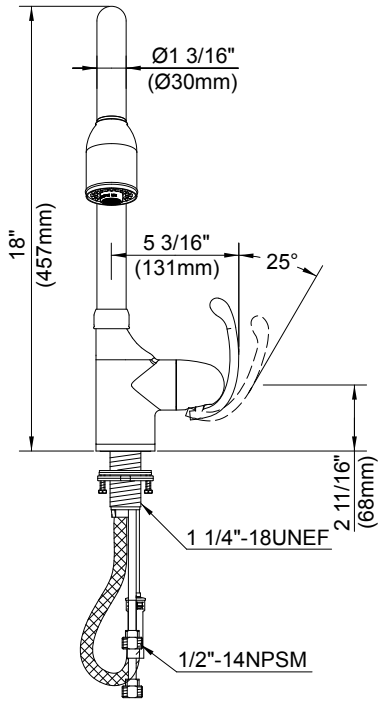

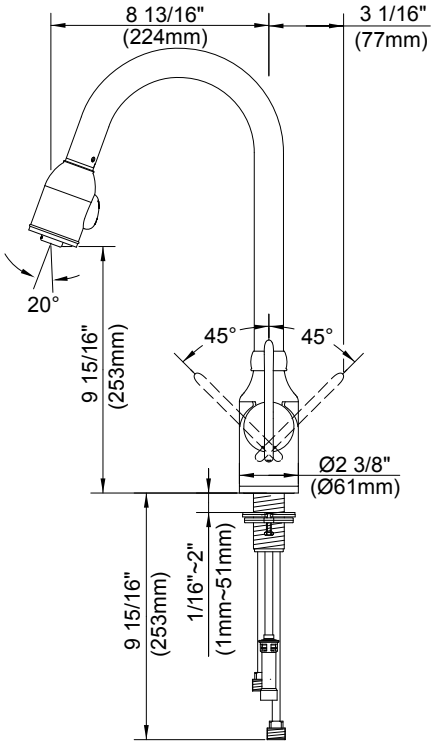

Submittal Information:

Job Name: _____ *Location:* _____

Contractor: _____ *Contact #:* _____