SPECIFICATIONS

MELROSE™ TWO HANDLE WIDESPREAD LAVATORY FAUCET

Model

D304012 (Replaces D300211 series)

Description

- Ceramic disc valve
- 6" high spout, 5 ¾" spout length
- Metal touch down drain assembly
- 3 hole mount

Standards

- UPC/cUPC
- NSF 61-9
- Energy policy act of 1992
- ASME A112.18.1
- CSA B125
- Meets CA AB-1953

Less than 0.25% lead content

- ADA Accessibility Guidelines for Buildings and Facilities - 4.27.4 Controls and Mechanisms

Warranty

Danze products are covered by a manufacturer's limited "lifetime" warranty for manufacturing defects.

Flow Rate

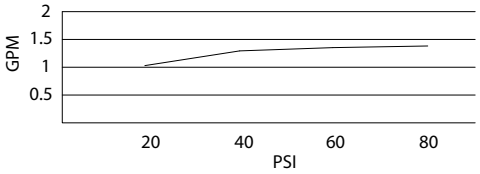

Finishes Available

- Chrome
- Other: Refer to Price List for additional finish

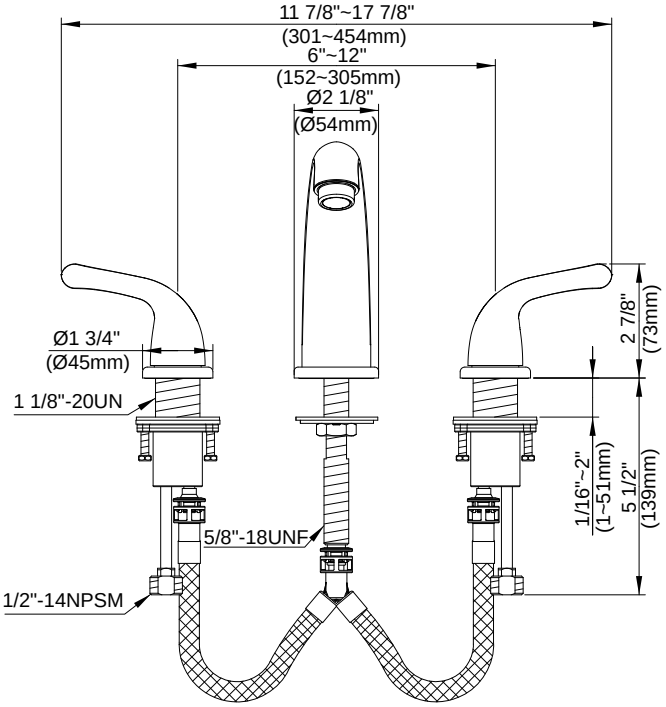

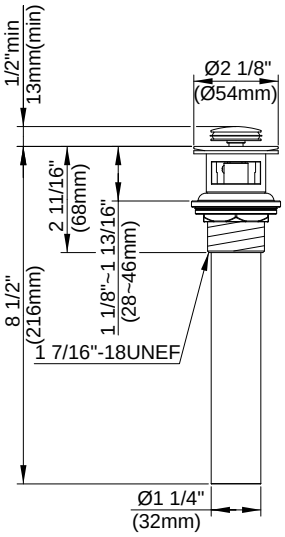

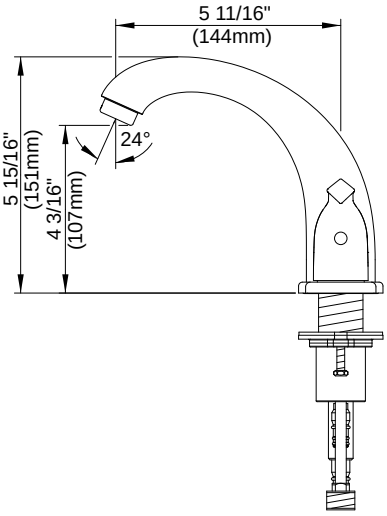

Submittal Information:

Job Name: _____ *Location:* _____

Contractor: _____ *Contact #:* _____