PACKAGE TERMINAL AIR CONDITIONER/HEAT PUMP

Standard and Remote Applications

MAINTENANCE & CLEANING MANUAL

PTAC

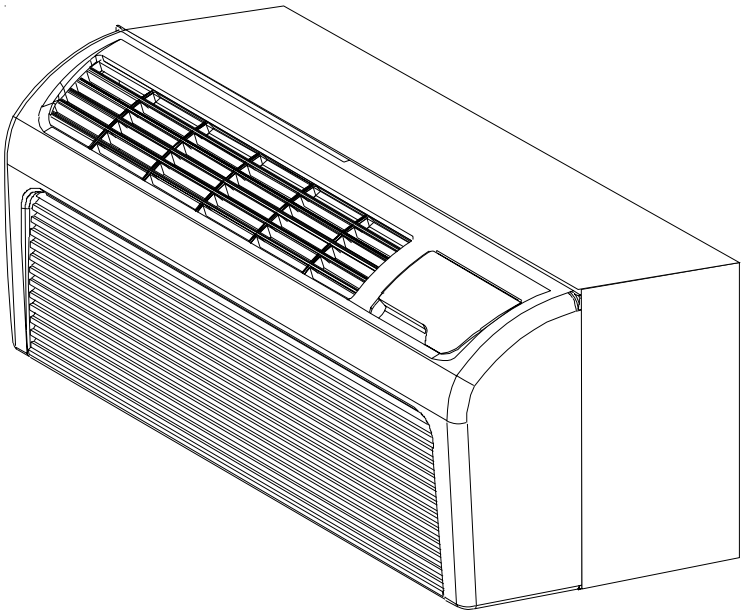

Made in USA

⚠ WARNING

TO PREVENT PROPERTY DAMAGE, PERSONAL INJURY OR DEATH DUE TO ELECTRICAL SHOCK, DISCONNECT THE ELECTRICAL POWER SUPPLY BEFORE CLEANING THIS UNIT.

⚠ WARNING

TO AVOID THE RISK OF PROPERTY DAMAGE, ELECTRICAL SHOCK OR PERSONAL INJURY, CLEAN AIR FILTERS AND COILS REGULARLY. CLOGGED OR SEVERLY RESTRICTED FILTERS OR COILS REDUCE AIRFLOW WHICH CAN CAUSE DRASTIC EFFICIENCY LOSS AS WELL AS SEVERE COMPONENT DAMAGE TO COMPRESSORS, ELECTRIC HEATER OR FAN MOTOR. IN EXTREME CASES, CLOGGED FILTERS AND/OR COILS MAY CREATE FIRE HAZARD AND WILL VOID THE WARRANTY.

⚠ WARNING

SOME LOCAL CONDITIONS AND ENVIRONMENTS CAN CAUSE FUNGI AND OTHER MATERIAL TO GROW INSIDE THE PTAC UNIT. THIS MATERIAL WHEN DRIED, AS WELL AS OTHER FOREIGN MATERIAL, SIMILAR TO DRYER LINT IN YOUR CLOTHES DRYER, ARE FIRE HAZARDS. BE SURE TO THOROUGHLY CHECK AND CLEAN THE UNIT'S COILS, BLOWER WHEEL AND BASEPAN PER THE INSTRUCTIONS CONTAINED IN THIS MANUAL.

Part No. 11113311
Printed in USA

This manual must be left with the owner of the equipment.

January 2004

Maintenance and Cleaning

MONTHLY MAINTENANCE AND CLEANING

Intake Air Filter

To properly maintain the operational performance of your PTAC unit, it is **extremely** important that the inlet air filter be cleaned once per month or more often if operated in dusty or dirty locations or conditions. The intake air filter is constructed of durable polypropylene. The “air intake” air filter can be easily inserted into the cabinet front using the cabinet filter guides. The intake air grille swings out for easy access to the filter. Before cleaning the intake filter, turn the unit off by setting the mode switch to the OFF position. Filter should be cleaned as required.

The following procedure is used to remove the intake filter:

1. Open the intake grille by grasping the top intake louver.
2. Pull the intake grille open.
3. Slide filter upward and remove.
4. Clean filter with vacuum or with running water.

Reverse this procedure to reinstall the filter.

NOTE: *Available accessory filter kits are FK10B (air intake filter - 10 per pack) and CFK10B (charcoal filter - 10 per pack). The charcoal filters will greatly improve the quality of the air by absorbing odors from tobacco smoke, mold, mildew, etc. Both filters are permanent and cleanable. Contact your sales person for details.*

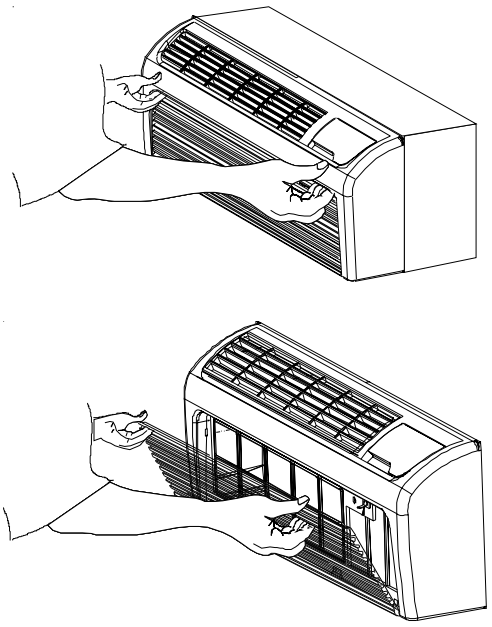

Intake Filter Removal

Vent Screen

Before cleaning the vent screen, disconnect power to the unit by unplugging the power cord at the wall outlet or subbase, or disconnect power at the fuse box or circuit breaker. **If unit is operated with vent door closed**, the vent screen does not need to be cleaned.

1. Remove the cabinet front as described in Front Removal.
2. Remove the six screws securing the chassis to the wall sleeve.
3. Slide the chassis out of the wall sleeve far enough so that the vent screen is accessible.
4. Remove the three screws securing the vent mesh screen to the partition panel.
5. Clean and replace the vent screen, slide the chassis back into the wall sleeve, secure it in place with six screws and reinstall the front cabinet.

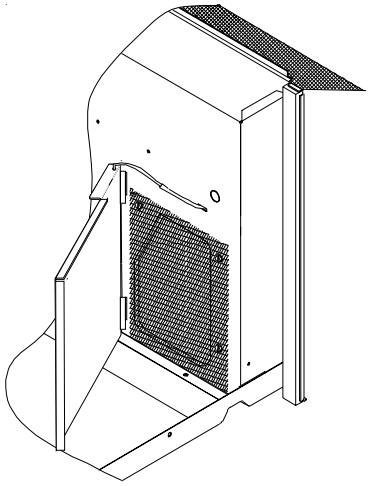

Vent - (Left Side Unit)

Cabinet Front

The cabinet front and discharge air grille can be cleaned with a water dampened cloth . Under no circumstances should hydrocarbon-based cleaners (e.g. acetone, benzene, naphtha gasoline, etc.) be used to clean the front or air grilles. Use care when cleaning the control area.

Maintenance and Cleaning

YEARLY MAINTENANCE AND CLEANING

NOTE: Use a mild **biodegradable** detergent such as Simple Green™ when cleaning the unit. Special care must be taken to protect the unit's control board and other electrical components from getting any water on them while cleaning. The use of harsh or caustic cleaning agents or materials such as bleach or coil cleaners that are not designed for PTAC products will cause damage or deterioration of the aluminum fin or coil material and is not recommended. Care must be taken not to bend the aluminum fin stock.

Routine Scheduled Maintenance

To achieve continuing top performance and high efficiency, establish a "once a year" cleaning/inspection schedule for the unit. Take the unit out of the sleeve and thoroughly clean and rinse. Be sure to include in the yearly cleaning the evaporator coils, and condenser coils, basepan, and drain passages. Scheduled maintenance can be accomplished by either local maintenance staff or by an authorized servicer. They must follow the instructions described in this manual.

Adverse Operating Conditions Maintenance

Units operating in dusty or corrosive locations; i.e. dusty construction site or sea coast, must be cleaned more often. A minimum of four (4) times a year will maintain proper operational conditions and protect unit components.

Wall Sleeve

Clean the wall sleeve while cleaning the unit. The caulking around the sleeve should be checked to make sure that any potential air and water openings around the sleeve are properly sealed. The wall sleeve's level should also be rechecked. Proper leveling for most installations are a ¼ bubble tilt to the outside and level from right to left. Contact your sales person for detailed maintenance or cleaning instructions.

Basepan and Condenser Coil

⚠ CAUTION

Do not use commercial grade coil cleaners. Some of these cleaners may contain Ethylene Diamine Tetracetic Acid (EDTA) which can shorten the life of the condenser coil.

Before cleaning the basepan and condenser coil, turn OFF unit mode switch and disconnect power to the unit.

To disconnect power, either unplug the power cord at the wall outlet or subbase, or disconnect power at the fuse box or circuit breaker.

1. Create a water-tight seal by tightly covering the entire control panel area and fan motor with plastic. Creating this seal prevents water from entering the control area or the fan motor and damaging the unit.
2. Spray condenser coil and basepan down with water. Next spray a mild **biodegradable** detergent such as Simple Green™ onto the condenser coil and basepan. Let set for five (5) minutes.
3. Rinse condenser coil and basepan with water again. **NOTE:** Ensure water pressure is no higher than that of an ordinary garden hose and the water temperature no higher than 120°F.
4. Tilt the non-compressor side of the unit up no higher than 45 degrees and allow water to drain out the other side of the unit.
5. Remove excess water left in the basepan by wiping the basepan with a dry cloth.
6. Remove the water-tight seal from the motor and control panel area.
7. Reinstall unit back into wall sleeve.
8. Allow unit to dry for 24 hours before reapplying power. When power is reapplied test unit for proper operation.
9. Place a non-acidic algaecide in the basepan to inhibit bacteria growth. Ensure the algaecide is compatible with wet coil operation and is not corrosive to the coil.

⚠ CAUTION

High pressure and high temperature cleaning is not recommended. Doing so could damage the aluminum fin stock and electrical components.

Maintenance and Cleaning

Clearance Check

Clearances around the unit should also be checked to make sure that the intake air and discharge air paths have not become blocked or restricted. A minimum of eight inches clearance is needed from unit to furniture , beds, or other objects for proper operation. Restricted discharge or intake air will reduce the unit's operational performance. In severe airflow restrictions damage can occur to unit components such as the compressor, electric heater or fan motor.

In the event this unit requires repair or servicing beyond what is covered in this manual,
contact an authorized service organization.
To obtain an authorized servicer, contact your sales representative or agency.