LIEBHERR

Design Guide

Freestanding / Semi Built In 30", 36" and 60"

Release 09 2015

Welcome

Liebherr's engineering excellence in Germany provides the largest selection of freezers, refrigerators and wine refrigerators worldwide.

Liebherr is one of the World's leading Manufacturers of Premium Refrigeration. For more than 60 years, Liebherr has specialized in developing and manufacturing first class refrigerators and freezers as well as wine cabinets. We focus on performance and efficiency as well as keeping food fresher longer. Produced in Austria and Germany, Liebherr has a full line of premium models tailored specifically for the North American marketplace to fit any design vision you have for your kitchen.

Our freestanding stainless models are sleek centerpieces that make a definite statement. Our built-in models are perfect for designs that call for units that slide into cabinet surrounds. And our fully-integrated models become one with your kitchen design, hidden seamlessly behind your custom cabinetry.

High quality materials, perfectly detailed finishes, precise electronic control systems, elite cooling components, variable speed compressors and the latest production processes ensure energy efficiency and performance for years to come. Our superior products offer premium quality, cutting edge design and innovative features that fit with your busy lifestyle.

Liebherr's Commitment to the Environment

The components of Liebherr products can be recycled when the necessary resources are available. A concern for the environment and a desire to protect resources has led to increased levels of recycling year after year. When Liebherr manufactures products, it is essential that the recyclable recovery rate of the materials we use constantly increases.

Recycling is a common goal among all manufacturers, municipalities and recycling companies to protect our environment. Protecting the environment and producing products which have a low impact on the environment, is one of Liebherr's core values. When the time comes, please attempt to dispose of your old appliances in an environmentally safe and friendly manner.

LIEBHERR WARRANTY PLAN

FULL TWO YEAR WARRANTY
For two years from the date of original purchase, your Liebherr warranty covers all parts and labor to repair or replace any part of the product which proves to be defective in materials or workmanship.

FULL FIVE YEAR WARRANTY
For five years from the date of original purchase, your Liebherr warranty covers all parts and labor to repair or replace any components that prove to be defective in materials or workmanship in the sealed system. The “Sealed System” means only the compressor, condenser, evaporator, drier and all connecting tubing.

LIMITED 6TH THROUGH 12TH YEAR WARRANTY
From the 6th through 12th year from the date of original purchase, your Liebherr warranty covers all parts that prove to be defective in materials or workmanship in the Sealed System (parts only).

For Service in the U.S.

Liebherr Service Center

Toll Free: **1-866-LIEBHER**
1-866-543-2437

Email: Service-appliances.us@liebherr.com

PlusOne Solutions, Inc.
3501 Quadrangle Blvd, Suite 120
Orlando, FL 32817

For Installation Questions

Install.Americas@liebherr.com

For Service in Canada

Liebherr Service Center

Toll Free: **1-888-LIEBHER**
1-888-543-2437

www.euro-parts.ca

EURO-PARTS CANADA
39822 Belgrave Road
Belgrave, Ontario, N0G 1E0
Phone: (519) 357-3320
Fax: (519) 357-1326

Contents

Safety Warnings 7
Electrical Requirements & Safety 8
IceMaker (if equipped) 8
Area Requirements 9
Safety Regulations 9

Specifications 30" and 60" Models
CS 1400 10
CS 1611 (left hinged) 10
CS 1640 10
CS 1660 11
SBS 32S1 11

Specifications 36" Models
CS 2060 (right hinged) CS 2061 (left hinged) 12
CS 2062 13
CBS 2062 13

Unit Dimensions
Unit Dimensions CS 1400 14
Unit Dimensions CS 1611 15
Unit Dimensions CS 1640, CS 1660 16
Unit Dimensions SBS 32S1 17
Unit Dimensions CS 2060, CS 2061 18
Unit Dimensions CS 2062, CBS 2062 19

Cabinet Opening Dimensions - 30" and 60" Models 20

Cabinet Opening Dimensions - 36" Models 21

Ventilation Requirements - 30" and 60" Models 22

Ventilation Requirements - 36" Models 23

Door swing clearance
Door Swing Clearance - CS 2060, CS 2061 24
Door Swing Clearance - CS 2062, CBS 2062 25

Accessories 26

General Remarks

Safety Warnings

PLEASE READ AND FOLLOW THESE INSTRUCTIONS

This design guide contains Warning and Important statements. This information is important for planning a safe and efficient installation. Please refer to the Installation Manual specific to your model for complete installation instructions.

This design guide is intended for planning purposes and is not a replacement for your appliance's Use and Care Manual which contains important information on how to use Liebherr appliances.

Always read and follow all Warning and Important statements!

⚠ WARNING!

Warning indicates a potentially hazardous situation which, if not avoided, could result in death or serious injury.

IMPORTANT

This highlights information that is especially relevant to a problem-free installation and operation.

Make sure incoming voltage is the same as the unit rating.

To reduce the risk of fire, electric shock, or personal injury, the installation work and electrical wiring must be done by a qualified electrician in accordance with all applicable codes and standards, including fire rated construction.

To the Installer

It is very important that the guidelines and instructions are followed in this design guide to ensure proper installation and operation of the unit. The Installation Guidelines section contains important information for making sure the installation is correct. Read and understand all the information and installation guidelines in this manual before the unit is installed.

It is also very important to **know** the Safety Information.

Electrical Requirements & Safety

A 15 amp or 20 amp, 110-120 VAC, circuit which is grounded and protected by a circuit breaker or fuse is required.

We recommend using a dedicated circuit for each appliance to prevent circuit overload and the chance of interruption to the appliance.

The appliances are equipped with a three-prong (grounding) polarized plug for protection against possible shock hazards.

Comply with the National Electrical Code as well as local codes and ordinances when installing the receptacle.

⚠ WARNING!

Electrocution hazard.

Electrical grounding required.

- **Do not remove the round grounding prong from the plug.**

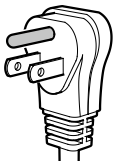

- **Do not use extension cords or ungrounded (two-prong) adapters.**
- **Do not use a power cord that is frayed or damaged.**
- **Do not use a power strip.**

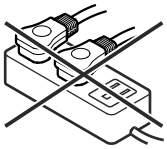

Failure to follow these instructions may result in fire, electrical shock or death.

IceMaker (if equipped)

The icemaker is located in the freezer compartment. It must be connected to the water supply. The appliance must be level for the icemaker to function properly.

The water supply pressure requirements are different based on whether or not the supplied Liebherr water filter is installed. With the filter installed, the pressure must be in the range of 40-90 psi (2.8-6.2 bar). Without the filter installed the acceptable pressure range is 22-87 psi (1.5-6 bar).

Use a braided style ice maker hose with 1/4" compression end or a 1/4" OD copper line to connect the water supply with the solenoid valve of the appliance. This is not supplied with the appliance.

The supplied brass fitting must be used to connect to the solenoid as the plastic threads on the solenoid are metric.

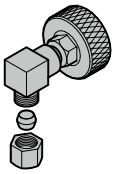

If you have hard water, we recommend you install a water softener. Also, a filter must be installed if the water contains solids such as sand.

All equipment and devices used to supply the water to the appliance must comply with the current regulations for your geographical area.

Safety Instructions and Warnings

- Do not attach the water source while the appliance is connected to an electrical outlet.
- A shut-off valve, must be installed between the hose line and the main water supply so that the water supply can be stopped if necessary. Do not install the shut-off valve behind the refrigeration unit.
- The connection to the water supply may only be made by a trained and licensed plumber.
- The water quality must comply with the drinking water regulations for the geographical area where the appliance is located.
- The icemaker is designed exclusively to make ice cubes in quantities needed by a household and may only be operated with water appropriate for this purpose.
- All repairs and work on the icemaker may only be done by customer service personnel or other trained personnel.
- The manufacturer cannot accept liability for damage caused by equipment or water lines between the solenoid valve and the water supply.

Area Requirements

Verify the following:

- Floors can support refrigerator's weight plus approximately 1200 pounds (544 kg) of food weight. Not all Liebherr products are designed for 1200 pounds (544 kg) of food. Some units are smaller and total weights may vary.
- Finished kitchen floor height is level. Refrigerator must be shimmed to the floor level, or levelled, to make sure, air vents are not obstructed.
- Remove anything attached to the rear or side walls that can obstruct refrigerator opening.
- Cutout dimensions are accurate.
- Electrical outlet is in correct location.

Do not install this unit next to any other refrigerator or freezer except another Liebherr model. Liebherr models are designed to allow side by side installation. They are equipped with a heating system to eliminate condensation when units are installed side by side. Installing this unit next to any other refrigerator or freezer can cause condensation or cause damage to the Liebherr unit.

IMPORTANT

To protect the refrigerator from possible damage, allow the appliance to stand 1 hour in place before turning the electricity on. This allows the refrigerant and system lubrication to reach equilibrium.

Blocking For Safety

The anti-tip bracket must be installed to prevent the unit from tipping after it is installed. Refer to chapter "Blocking For Safety" in the installation instructions.

Safety Regulations

The appliances and are designed to cool, freeze, store food as well and make ice (if equipped).

The appliances are manufactured to operate within specific ambient temperature limits according to its climate rating.

The climate rating indicates the ambient temperature at which the appliance may be operated in order to deliver optimal refrigeration performance.

The climate rating for each model is visible in chapter "Specifications".

Climate Rating	Ambient Temperature
SN	50°F to 90°F (10°C to 32°C)
N	61°F to 90°F (16°C to 32°C)
ST	61°F to 100°F (16°C to 38°C)
T	61°F to 109°F (16°C to 43°C)
SN-ST	50°F to 100°F (10°C to 38°C)
SN-T	50°F to 109°F (10°C to 43°C)

IMPORTANT

Do not operate the appliance outside the specified ambient temperature range.

- Refrigerant circuits are tested for leaks.
- The 30" appliances

  CS 1400
  CS 1611
  CS 1640
  CS 1660

  complies with current safety regulations

  CAN/CSA C22.2 # 63
  UL 250

- The 36" appliances

  CS 2062
  CBS 2062
  CS 2060
  CS 2061

  complies with current safety regulations

  CAN/CSA C22.2 No.60335-1-11
  UL 60335-1 Fifth Edition
  CAN/CSA C22.2 No. 60335-2-24-06
  UL 60335-2-24 First Edition

Specifications 30" and 60" Models

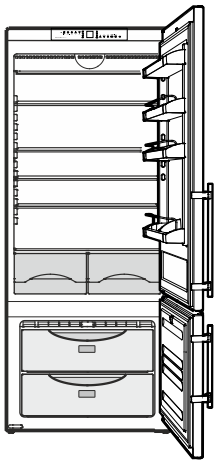

CS 1400

Energy Star:	certified
Energy consumption p. a.:	414 kWh
Energy Supply:	115V / 60Hz / 2.5A
Total capacity:	14 cu ft (396 L)
Refrigerator:	11 cu ft (312 L)
Freezer:	3 cu ft (84 L)
Climate Rating:	SN-T
Door hinges:	right / reversible

- Automatic refrigerator defrosting
- Automatic freezer compartment defrosting
- SmartSteel doors

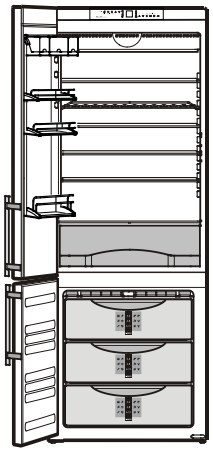

CS 1611

Energy Star:	certified
Energy consumption p. a.:	433 kWh
Energy Supply:	115V / 60Hz / 2.5A
Total capacity:	15.5 cu ft (438 L)
Refrigerator:	11.3 cu ft (319 L)
Freezer:	4.2 cu ft (119 L)
Climate Rating:	SN-T
Door hinges:	left / reversible

- Automatic refrigerator defrosting
- Automatic freezer compartment defrosting
- SmartSteel doors
- LED light column and LED freezer lighting

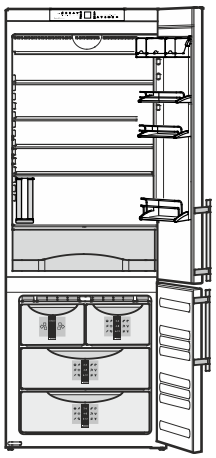

CS 1640

Energy Star:	certified
Energy consumption p. a.:	514 kWh
Energy Supply:	115V / 60Hz / 2.5A
Total capacity:	15.2 cu ft (431 L)
Refrigerator:	11 cu ft (312 L)
Freezer:	4.2 cu ft (119 L)
Ice cube output:	2.2 lbs/24h
Ice cube stock:	3.3 lbs
IceMaker water tank capacity:	73.2 cu in (1.2 L)
Climate Rating:	SN-T
Door hinges:	right / reversible

- Automatic refrigerator defrosting
- Automatic freezer compartment defrosting
- Automatic IceMaker can be switched off
- SmartSteel doors

Freestanding/Semi Built In Models

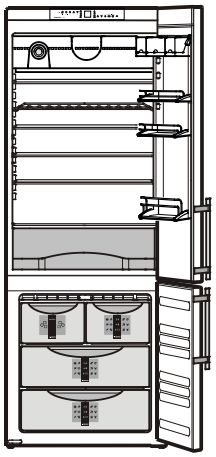

CS 1660

Energy Star:	certified
Energy consumption p. a.:	517 kWh
Energy Supply:	115V / 60Hz / 2.5A
Total capacity:	15.5 cu ft (438 L)
Refrigerator:	11.3 cu ft (319 L)
Freezer:	4.2 cu ft (119 L)
Ice cube output:	2.2 lbs/24h
Ice cube stock:	3.3 lbs
Climate Rating:	SN-T
Door hinges:	right / reversible

- Automatic refrigerator defrosting
- Automatic freezer compartment defrosting
- Automatic IceMaker can be switched off
- SmartSteel doors
- LED light column and LED freezer lighting

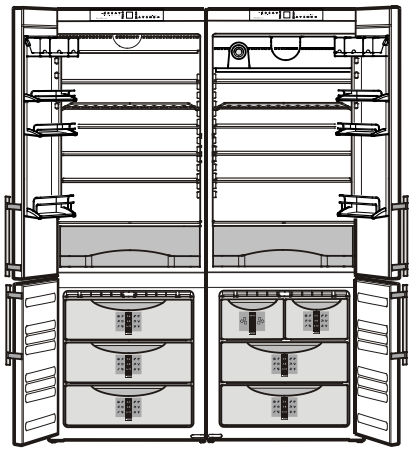

SBS 32S1 (CS 1611 & CS 1660)

Energy Star:	certified
Energy consumption p. a.:	950 kWh
Energy Supply:	115V / 60Hz / 5A
Total capacity:	30.9 cu ft (876 L)
Refrigerator:	22.5 cu ft (638 L)
Freezer:	8.4 cu ft (238 L)
Ice cube output:	2.2 lbs/24h
Ice cube stock:	3.3 lbs
Climate Rating:	SN-T

- Automatic refrigerator defrosting
- Automatic freezer compartment defrosting
- Automatic IceMaker can be switched off
- SmartSteel doors
- LED light column and LED freezer lighting

Specifications 36" Models

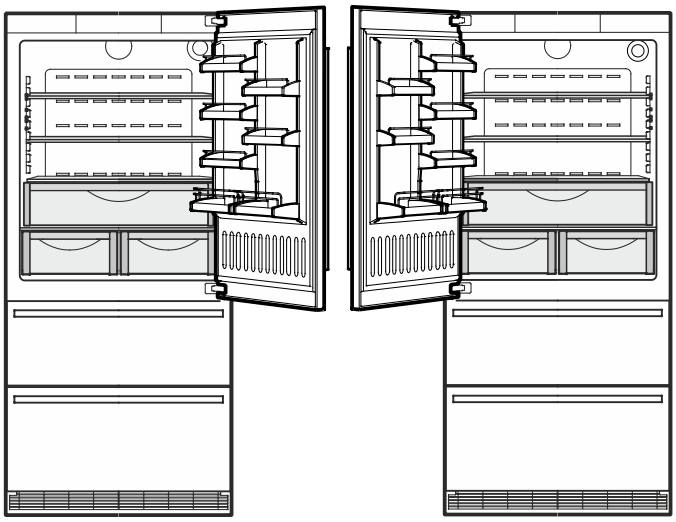

CS 2060 (right hinged) **CS 2061** (left hinged)

Energy Star:	certified
Energy consumption p. a.:	532 kWh
Energy Supply:	115V / 60Hz / 2.5A
Total capacity:	19.5 cu ft (552 L)
Refrigerator:	13.5 cu ft (382 L)
Freezer:	6 cu ft (170 L)
Ice cube output:	3 lbs/24h
Ice cube stock:	6 lbs
Climate Rating:	SN-T

- Automatic refrigerator defrosting
- Automatic freezer compartment defrosting
- Automatic IceMaker can be switched off
- LED light column and LED freezer lighting

Freestanding/Semi Built In Models

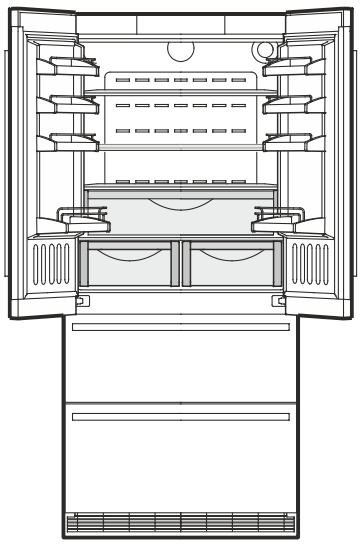

CS 2062

Energy Star:	certified
Energy consumption p. a.:	532 kWh
Energy Supply:	115V / 60Hz / 2.5A
Total capacity:	19.5 cu ft (552 L)
Refrigerator:	13.5 cu ft (382 L)
Freezer:	6 cu ft (170 L)
Ice cube output:	3 lbs/24h
Ice cube stock:	6 lbs
Climate Rating:	SN-T

- Automatic refrigerator defrosting
- Automatic freezer compartment defrosting
- Automatic IceMaker can be switched off
- LED light column and LED freezer lighting

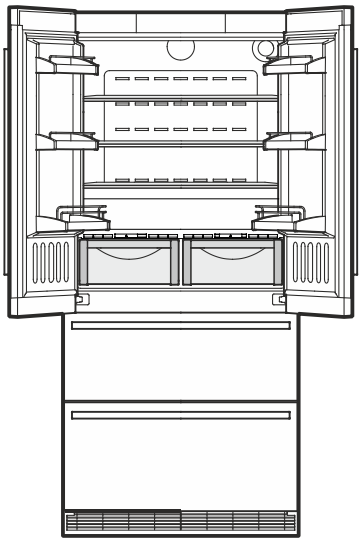

CBS 2062

Energy Star:	certified
Energy consumption p. a.:	528 kWh
Energy Supply:	115V / 60Hz / 2.5A
Total capacity:	18.9 cu ft (535 L)
Refrigerator:	12.9 cu ft (365 L)
Freezer:	6 cu ft (170 L)
Ice cube output:	3 lbs/24h
Ice cube stock:	6 lbs
Climate Rating:	SN-T

- Automatic refrigerator defrosting
- Automatic freezer compartment defrosting
- Automatic IceMaker can be switched off
- LED light column and LED freezer lighting
- BioFresh drawers with adjustable humidity

Freestanding/Semi Built In Models

Unit Dimensions CS 1400

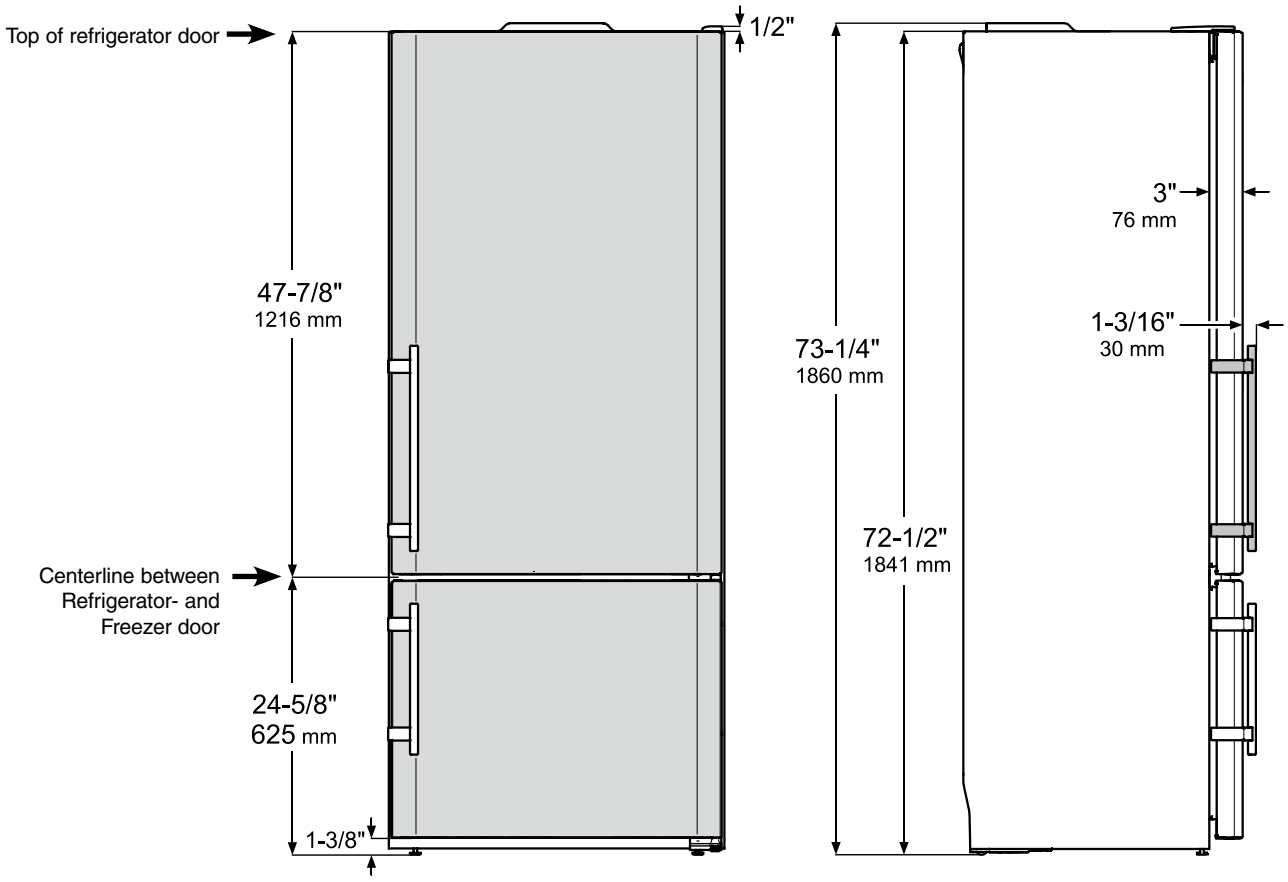

Height can be increased by 5/8" (16 mm) by turning the levelling feet at the front and the height adjustable roller units at the appliance rear.

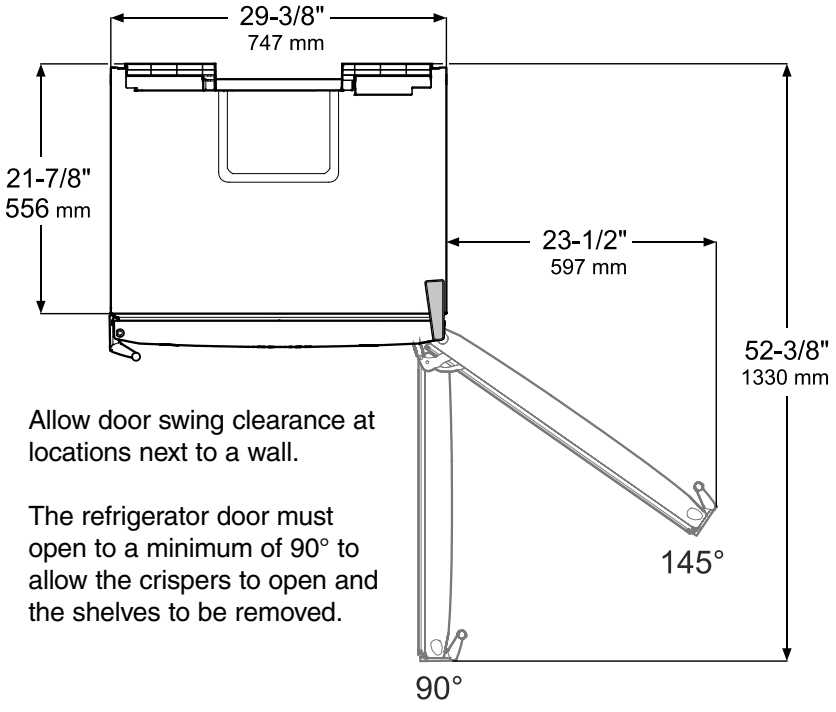

Allow door swing clearance at locations next to a wall.

The refrigerator door must open to a minimum of 90° to allow the crispers to open and the shelves to be removed.

Freestanding/Semi Built In Models

Unit Dimensions CS 1611(left hinged)

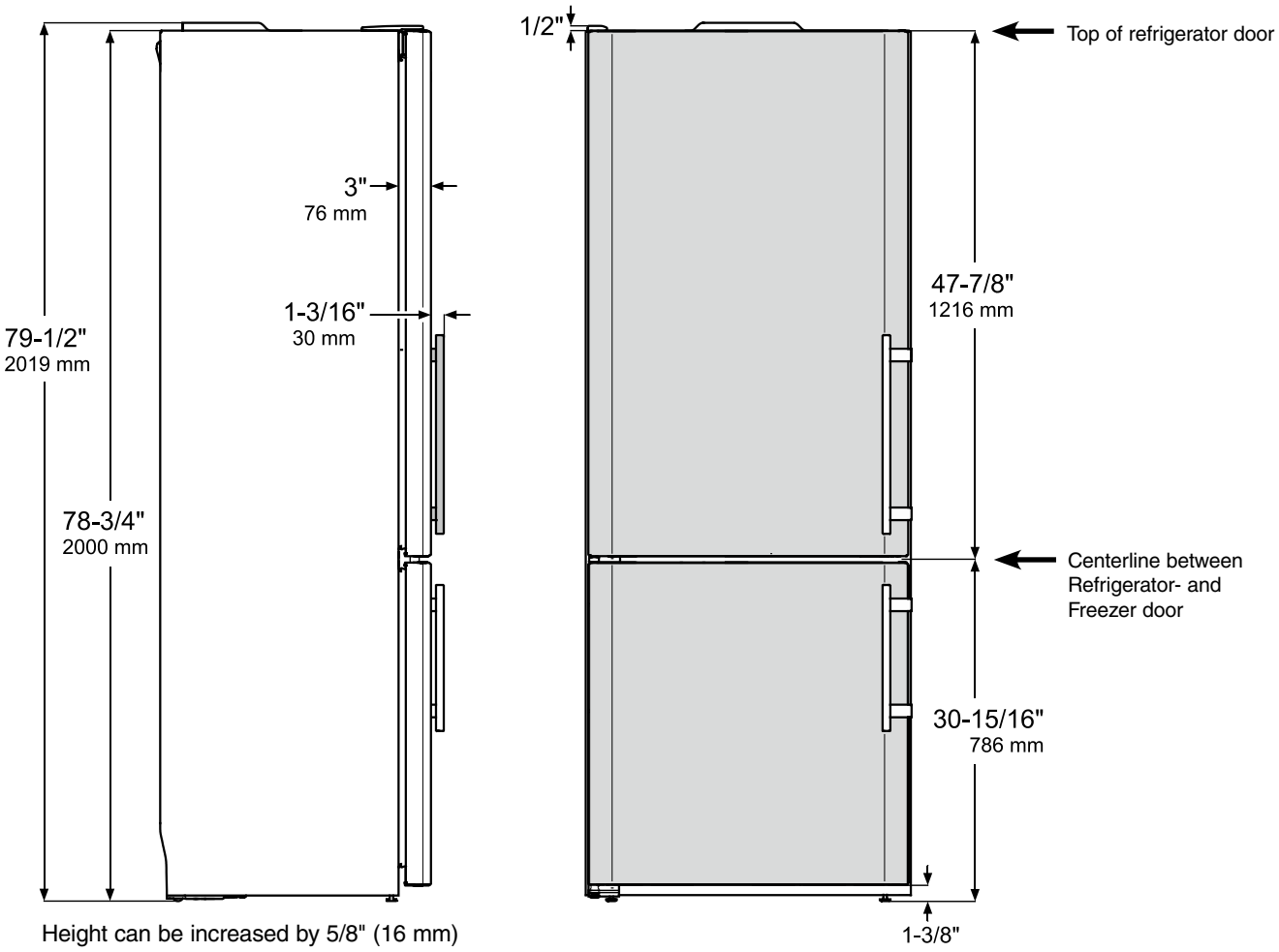

Height can be increased by 5/8" (16 mm) by turning the levelling feet at the front and the height adjustable roller units at the appliance rear.

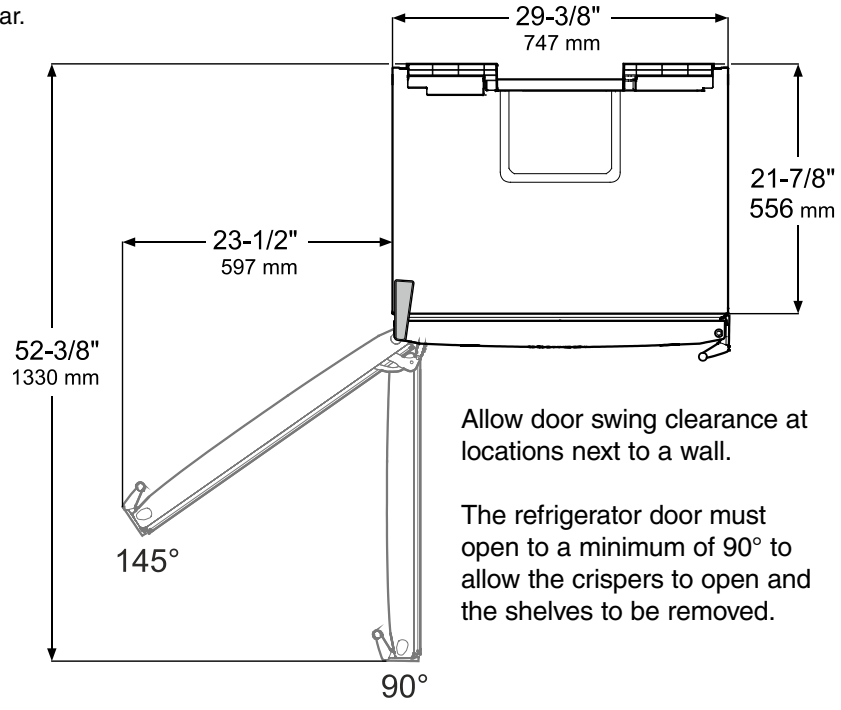

Allow door swing clearance at locations next to a wall.

The refrigerator door must open to a minimum of 90° to allow the crispers to open and the shelves to be removed.

Unit Dimensions CS 1640, CS 1660

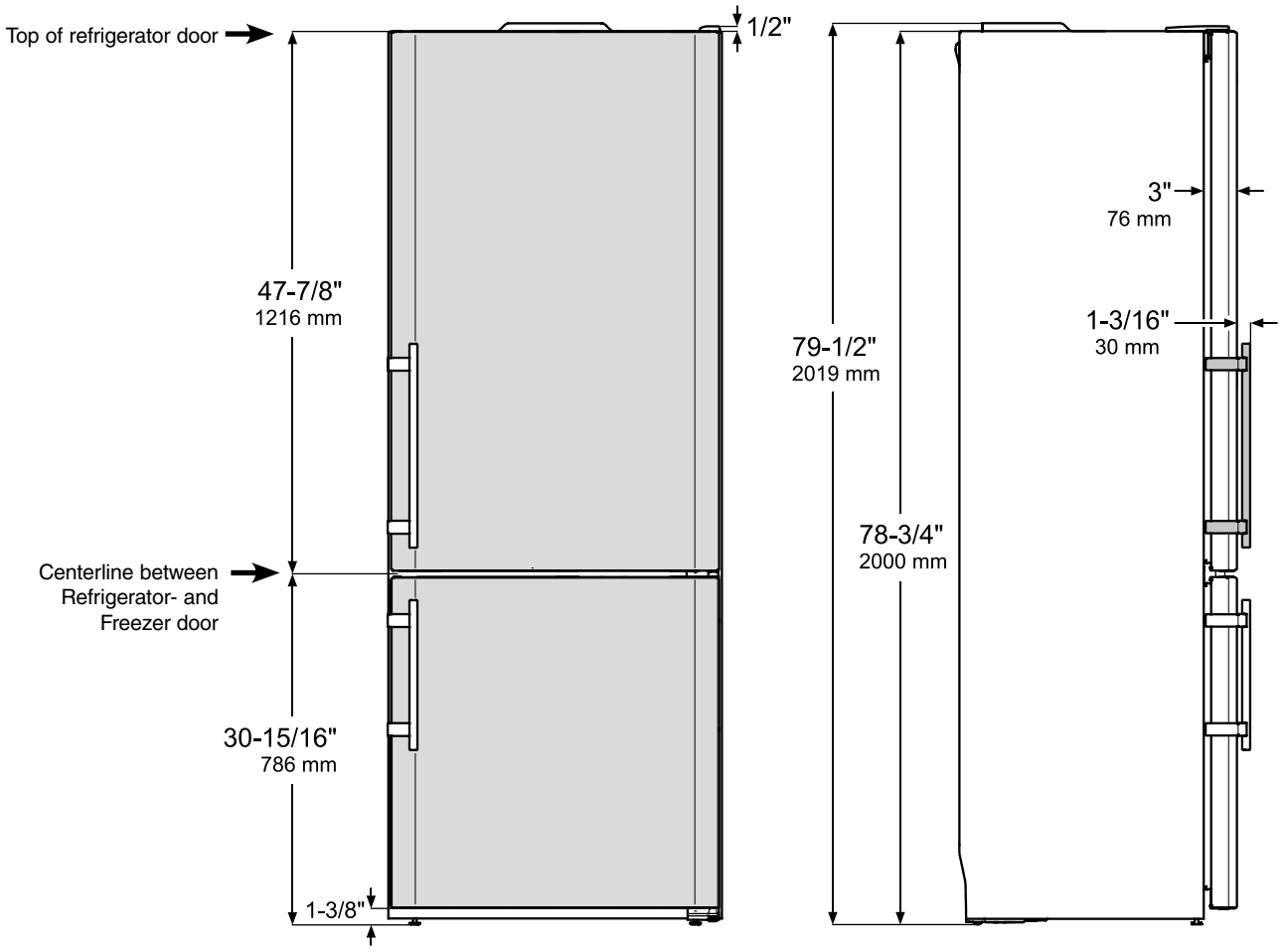

Height can be increased by 5/8" (16 mm) by turning the levelling feet at the front and the height adjustable roller units at the appliance rear.

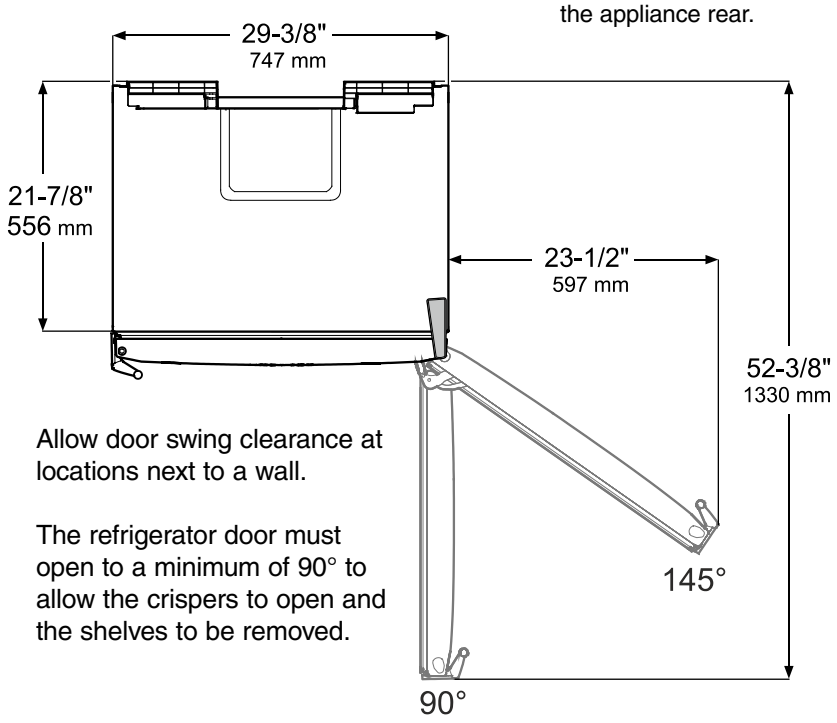

Allow door swing clearance at locations next to a wall.

The refrigerator door must open to a minimum of 90° to allow the crispers to open and the shelves to be removed.

Unit Dimensions SBS 32S1 (CS 1611 & CS 1660)

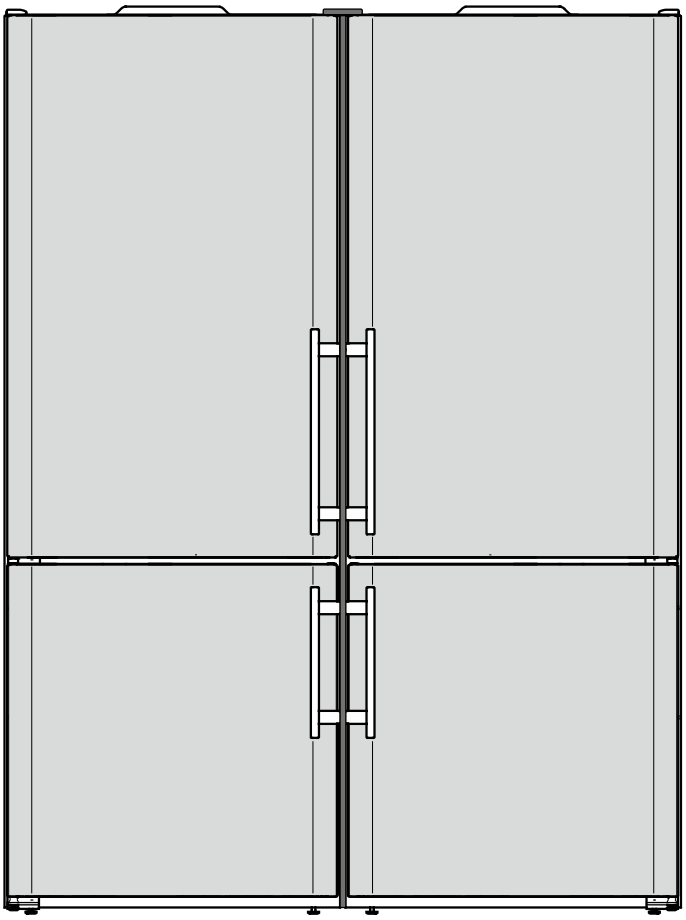

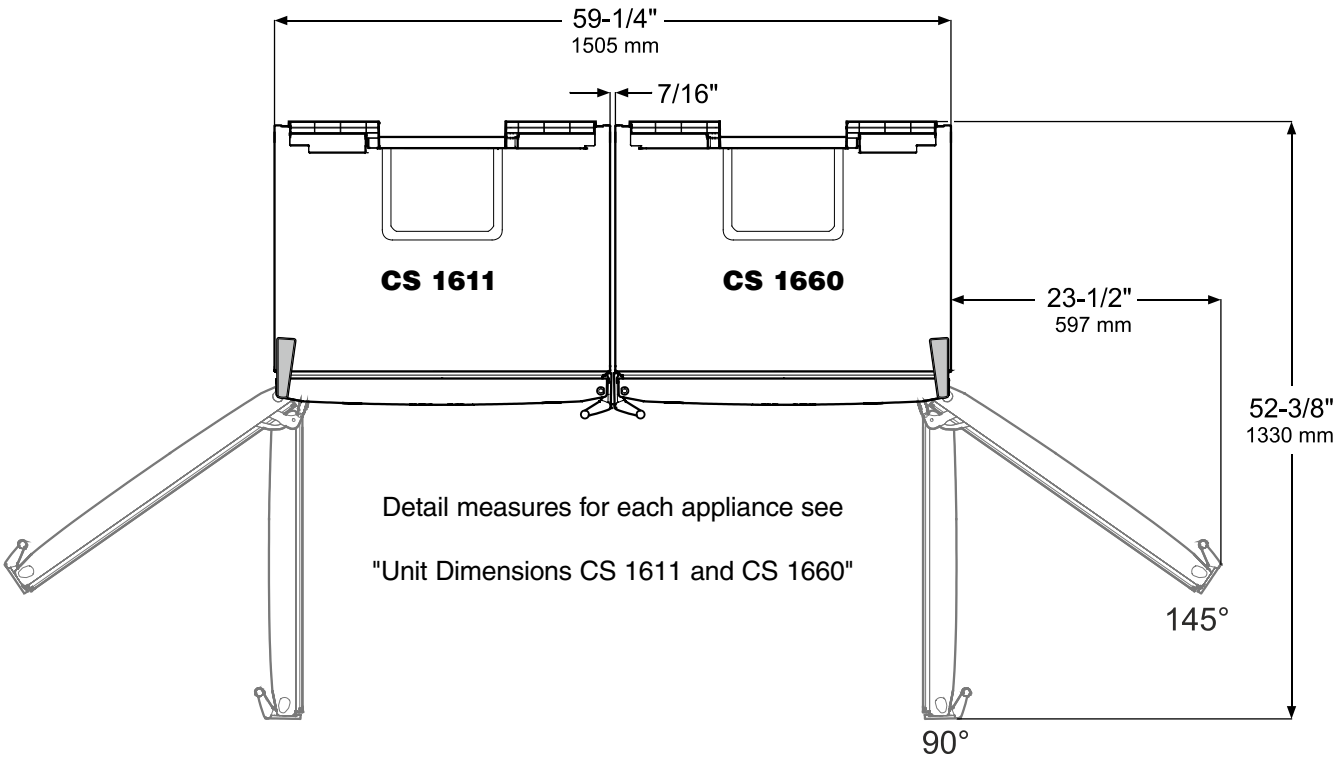

Unit Dimensions CS 2060, CS 2061

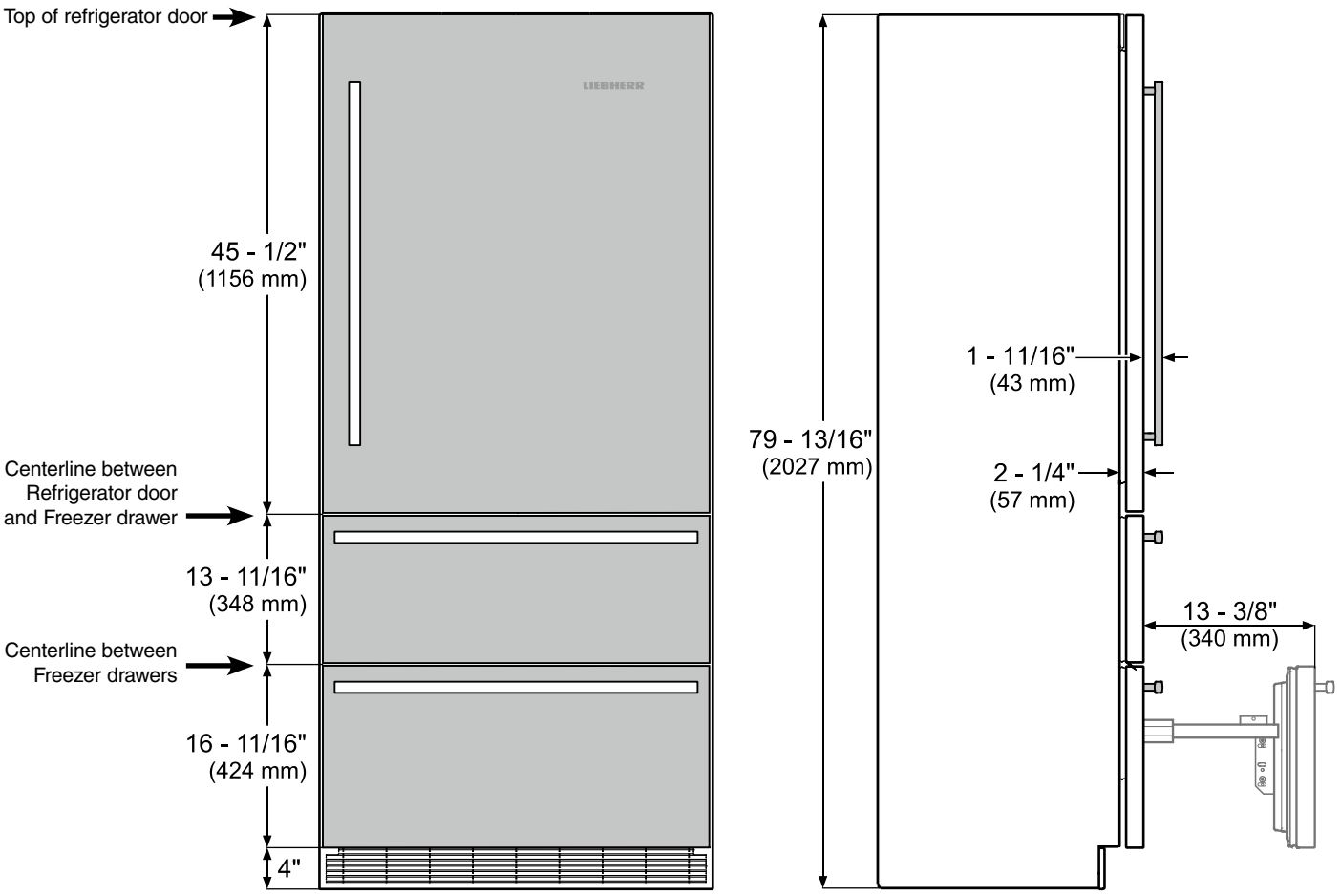

Height can be increased by 1-1/2" (40 mm) by turning the levelling feet at the front and the height adjustable roller units at the appliance rear.

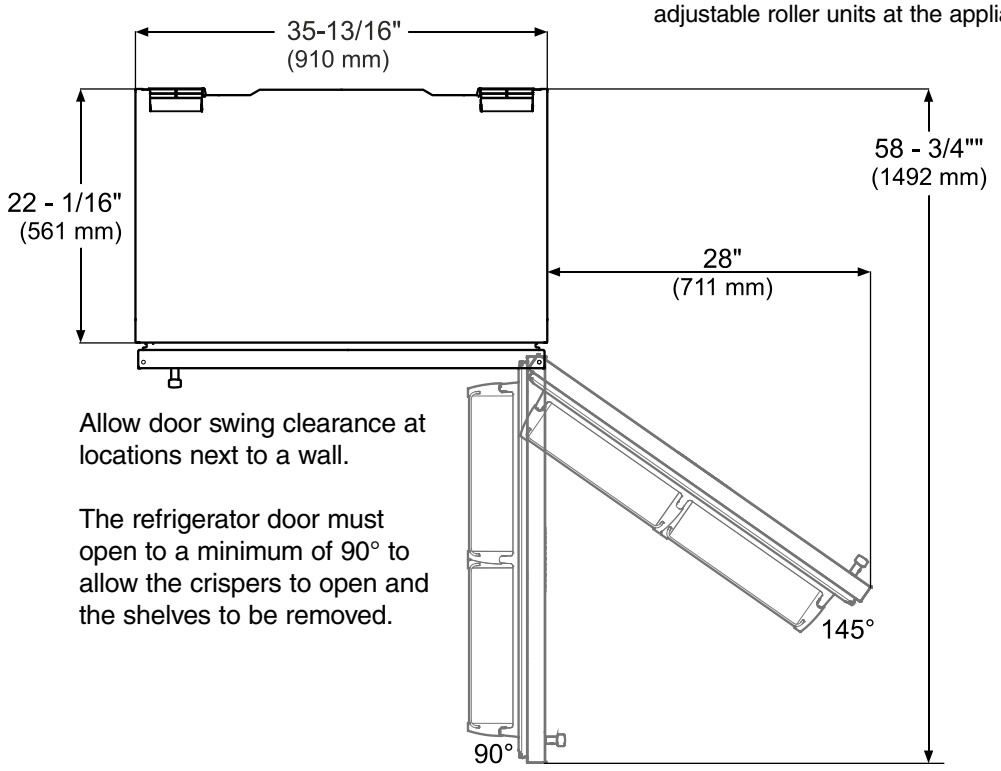

Allow door swing clearance at locations next to a wall.

The refrigerator door must open to a minimum of 90° to allow the crispers to open and the shelves to be removed.

Unit Dimensions CS 2062, CBS 2062

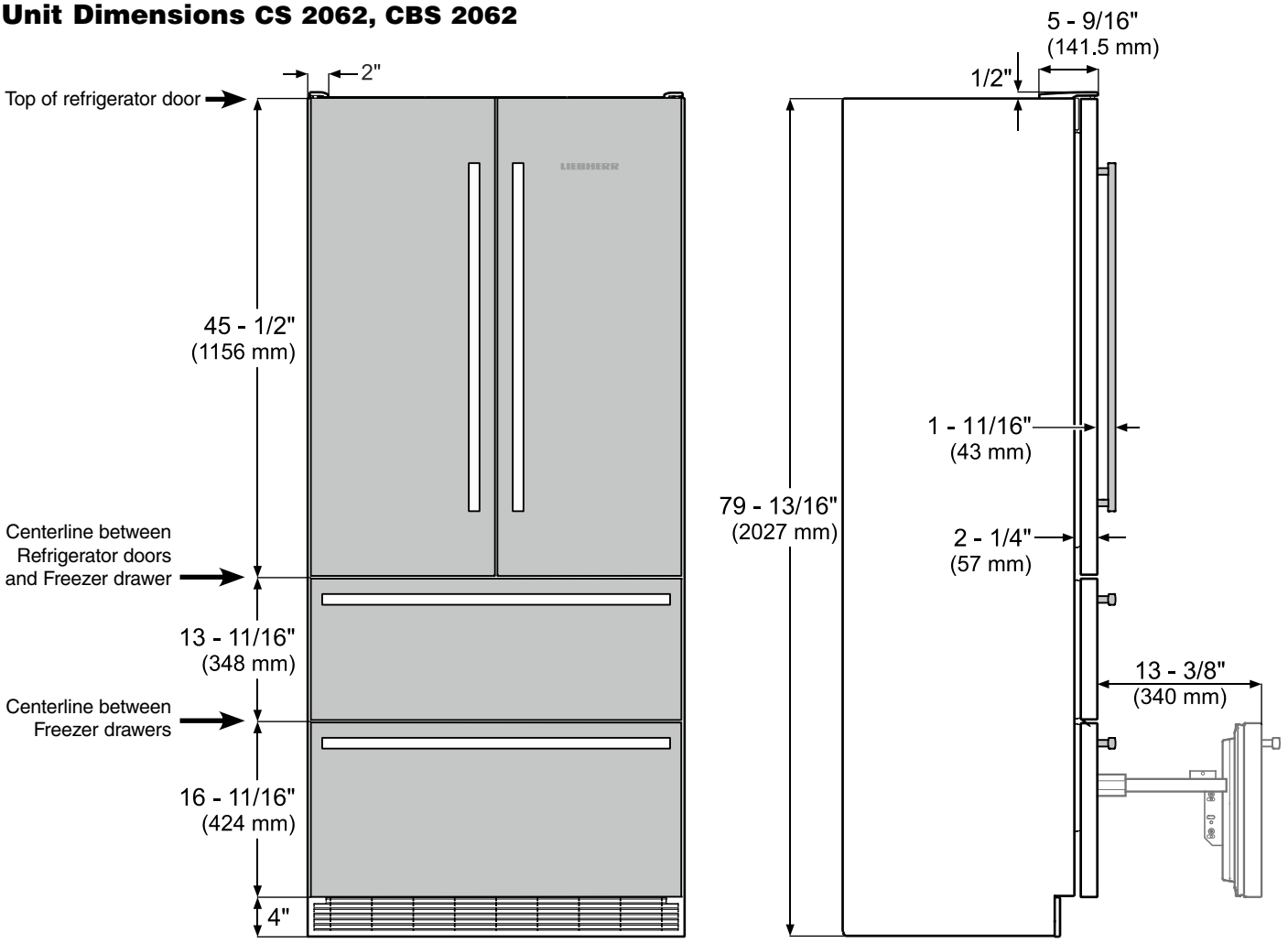

Height can be increased by 1-1/2" (40 mm) by turning the levelling feet at the front and the height adjustable roller units at the appliance rear.

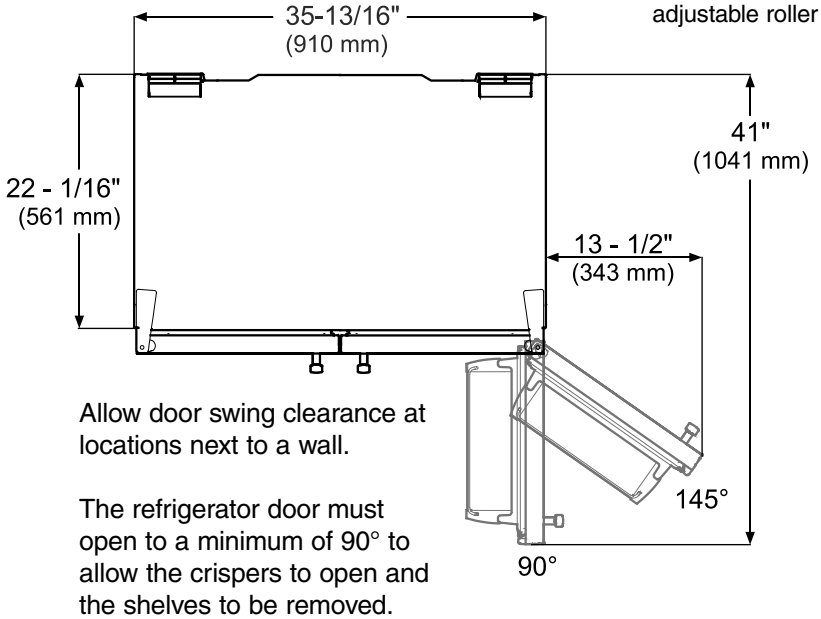

Allow door swing clearance at locations next to a wall.

The refrigerator door must open to a minimum of 90° to allow the crispers to open and the shelves to be removed.

Freestanding/Semi Built In Models

Cabinet Opening Dimensions - 30" and 60" Models

The appliance can be used freestanding or semi built-in.
If semi built-in, consider the cabinet opening dimensions specified below.

CS 1400

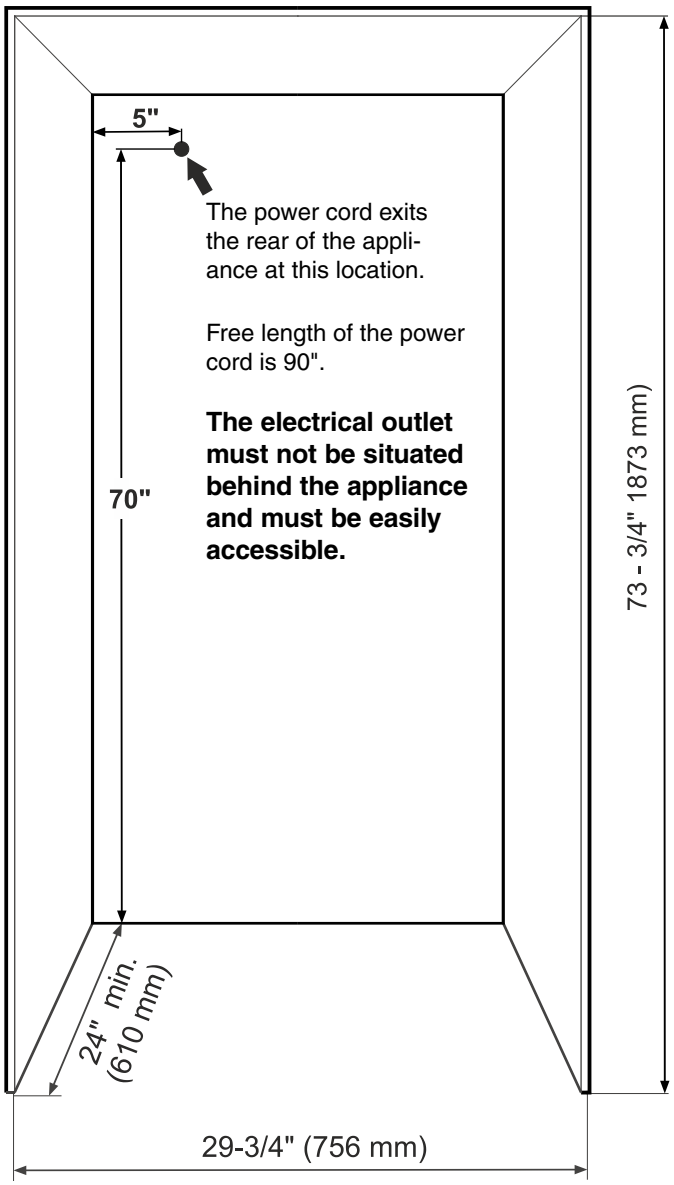

CS 1611, CS 1640, CS 1660

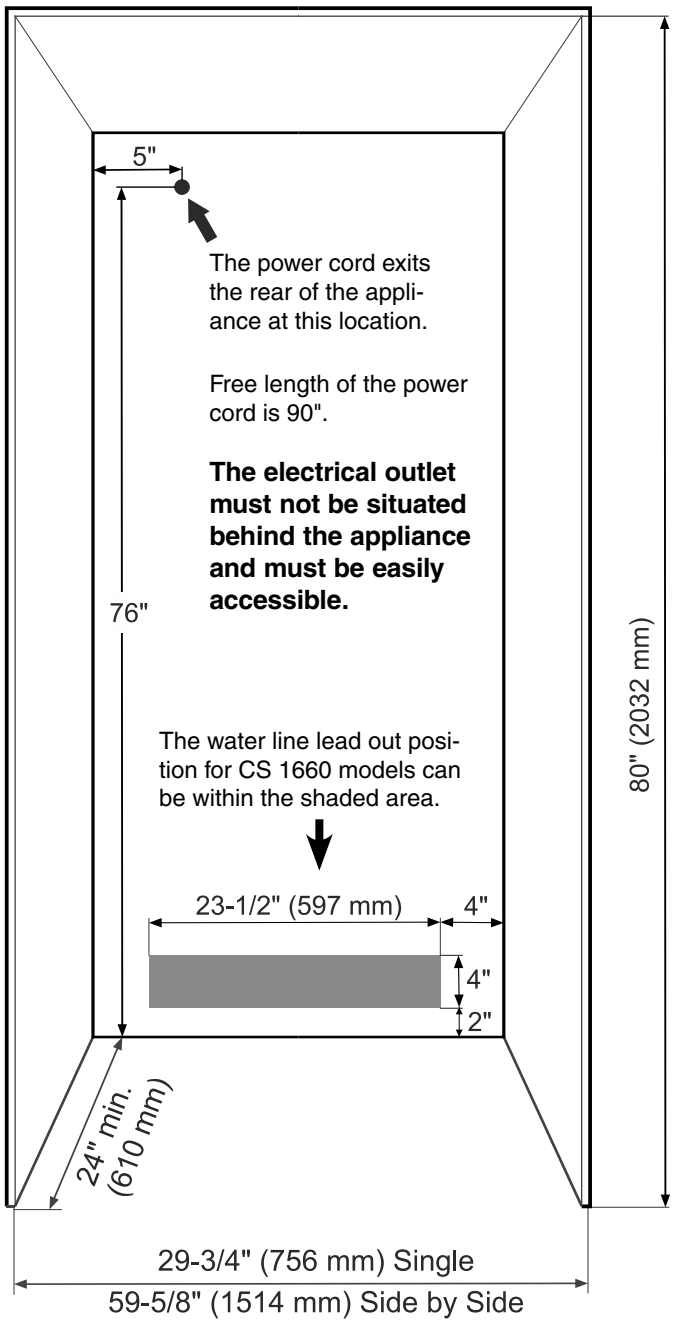

IMPORTANT

Do not install the shut-off valve for the water supply behind the appliance.

NOTE

If the gap between the rear of the appliance and the wall is less than 2 inch (51 mm), the power consumption level may increase.

Cabinet Opening Dimensions 36" Models

The appliance can be used freestanding or semi built-in.

If semi built-in, consider the cabinet opening dimensions specified below.

Minimum opening height for the **single** door 36" models (CS 2060 / CS 2061) is **80"**.

Minimum opening height for the **french** door 36" models (CS 2062 / CBS 2062) is **80-1/2"** to accommodate the top mounted hinges.

The requirements for water supply and electrical outlet are the same for both applications.

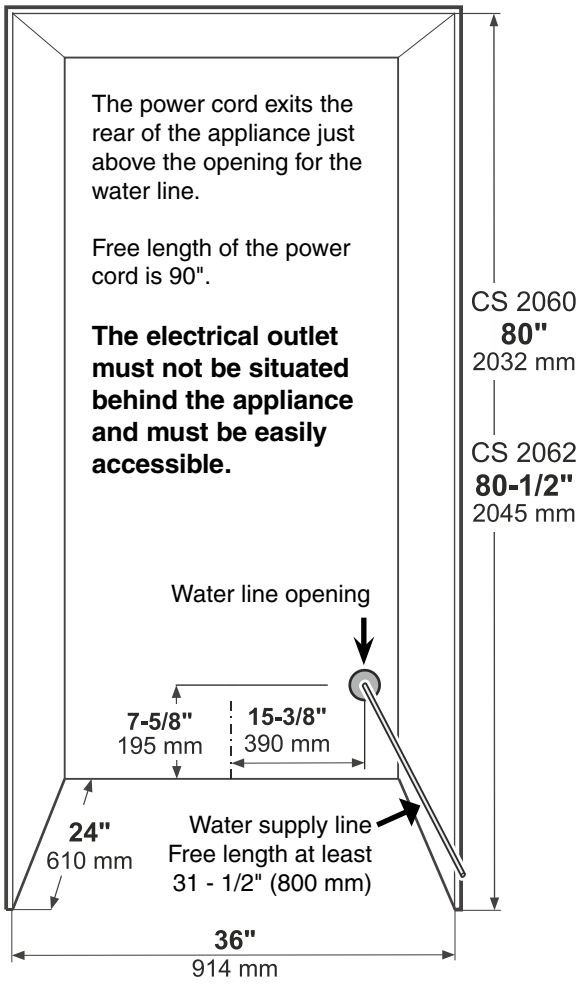

IMPORTANT

With 24" depth cabinets, the water line opening must be in the location as shown as there will not be room to route a water line behind the appliance for risk of pinching.

With cabinets deeper than 24" there is room to fit the pipe behind the appliance and the wall so there are no requirements for the water line lead out position.

Do not install the shut-off valve for the water supply behind the appliance!

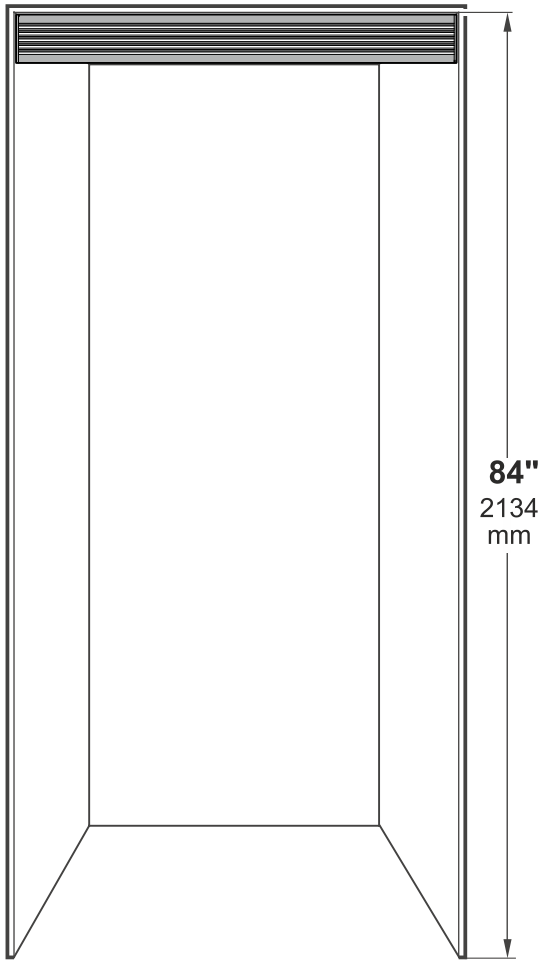

The cabinet opening height is 84" when using the decorative grille. The decorative grille is deliverable as accessory and is not required for proper operation of the appliance. All ventilation requirements are handled through the toe kick grille on the appliance and this decorative grille is intended to be used as a filler for pre-existing 84" openings.

NOTE

The decorative upper grille attaches to the cabinets / gables on either side of it and not to the appliance itself nor any cabinet above.

Ventilation Requirements 30" and 60" Models

Do not restrict the air flow. The opening can either be directly over the appliance ① , above the cabinet and below the ceiling ② or through a vent installed in a soffit ③ .

The cabinet height as specified at **80”** (2032 mm) will create a **1-5/16”** (33 mm) gap above the appliance providing optimal air flow over the top of the appliance for its efficient operation.

To have the same air flow for CS 1400 appliances, the cabinet opening height must be **73-3/4"** minimum.

Be sure to consider the possibility of having to raise some of the leveling legs in order to level the appliance when installing. If you adjust the height of the appliance - it will effectively reduce air flow. Therefore leave yourself some room for adjustment.

IMPORTANT

The section between the freezer door and the floor must not be covered.

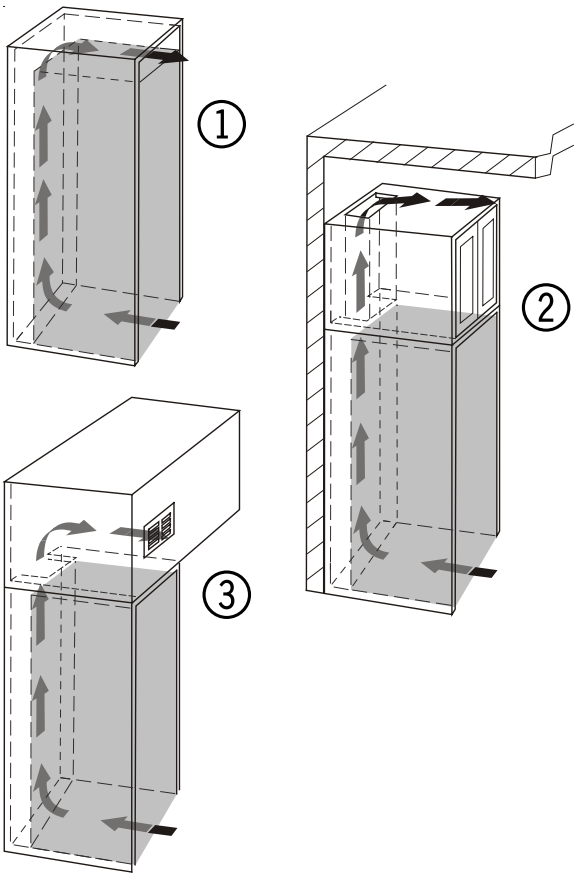

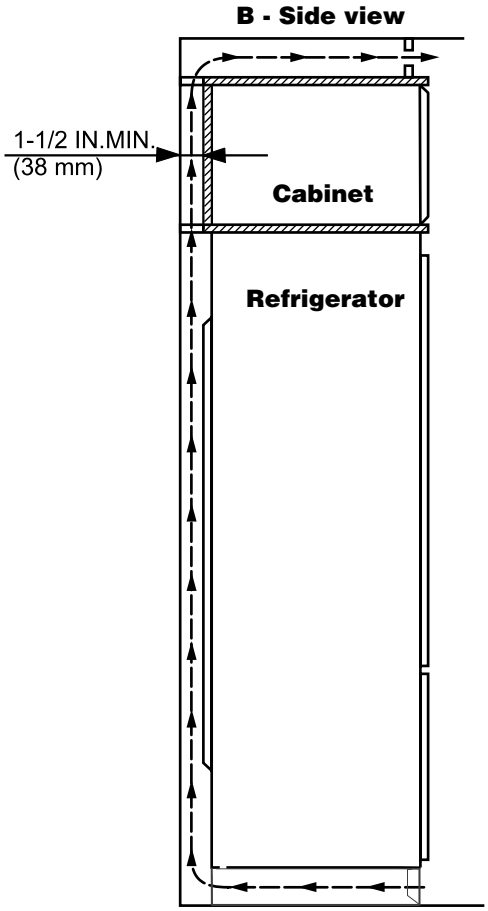

The refrigerator is designed to allow proper air flow when the appliance is installed up against the wall.

A minimum space of 1 1/2" is required behind the cabinet when venting above an upper cabinet which is installed flush to the top of the appliance.

Ventilation Requirements 36" Models

CS/CBS 20 appliances dont need any ventilation openings in the cabinet.
The required airflow is directed through the toe kick area.

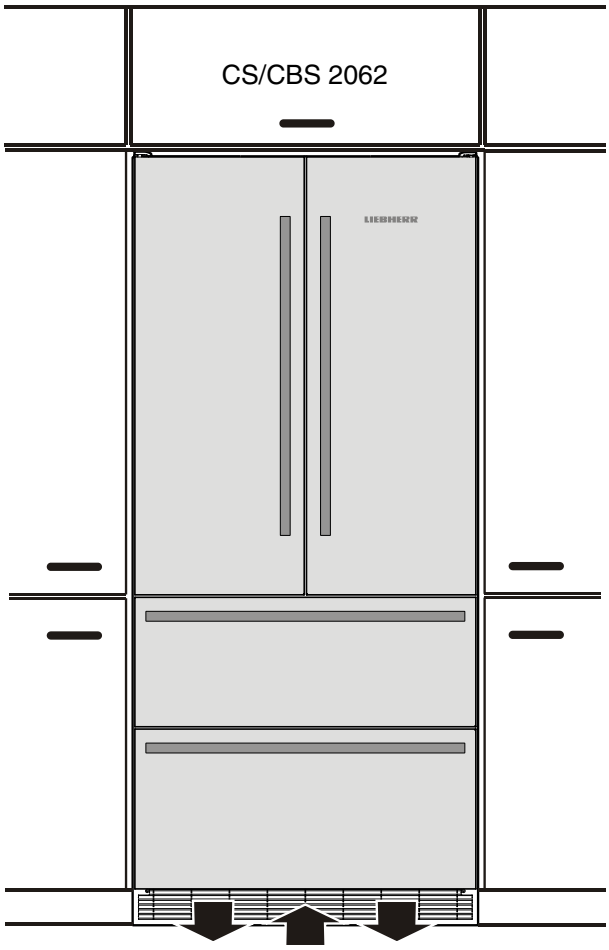

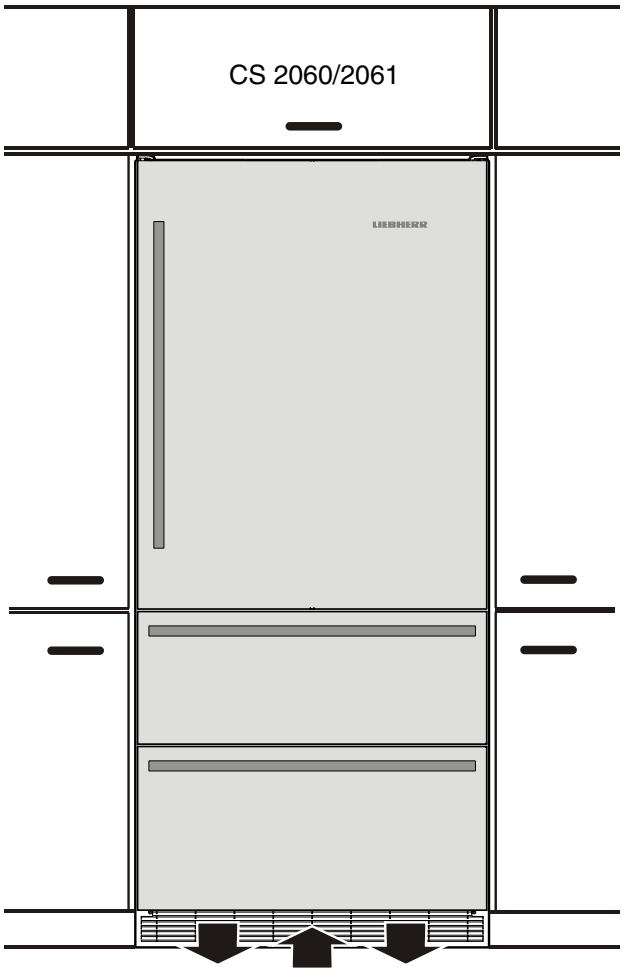

It is important to use the provided cover grille for the ventilation opening. This opening must not be covered.

36 " models contains R600a refrigerant.
Please consider the warning below.

R600a Refrigerant

⚠ WARNING!

The refrigerant R600a contained within the appliances is environmentally friendly, but flammable. Leaking refrigerant can ignite.

To prevent possible ignition, designed ventilation is required.

Door Swing Clearance CS 2060, CS 2061

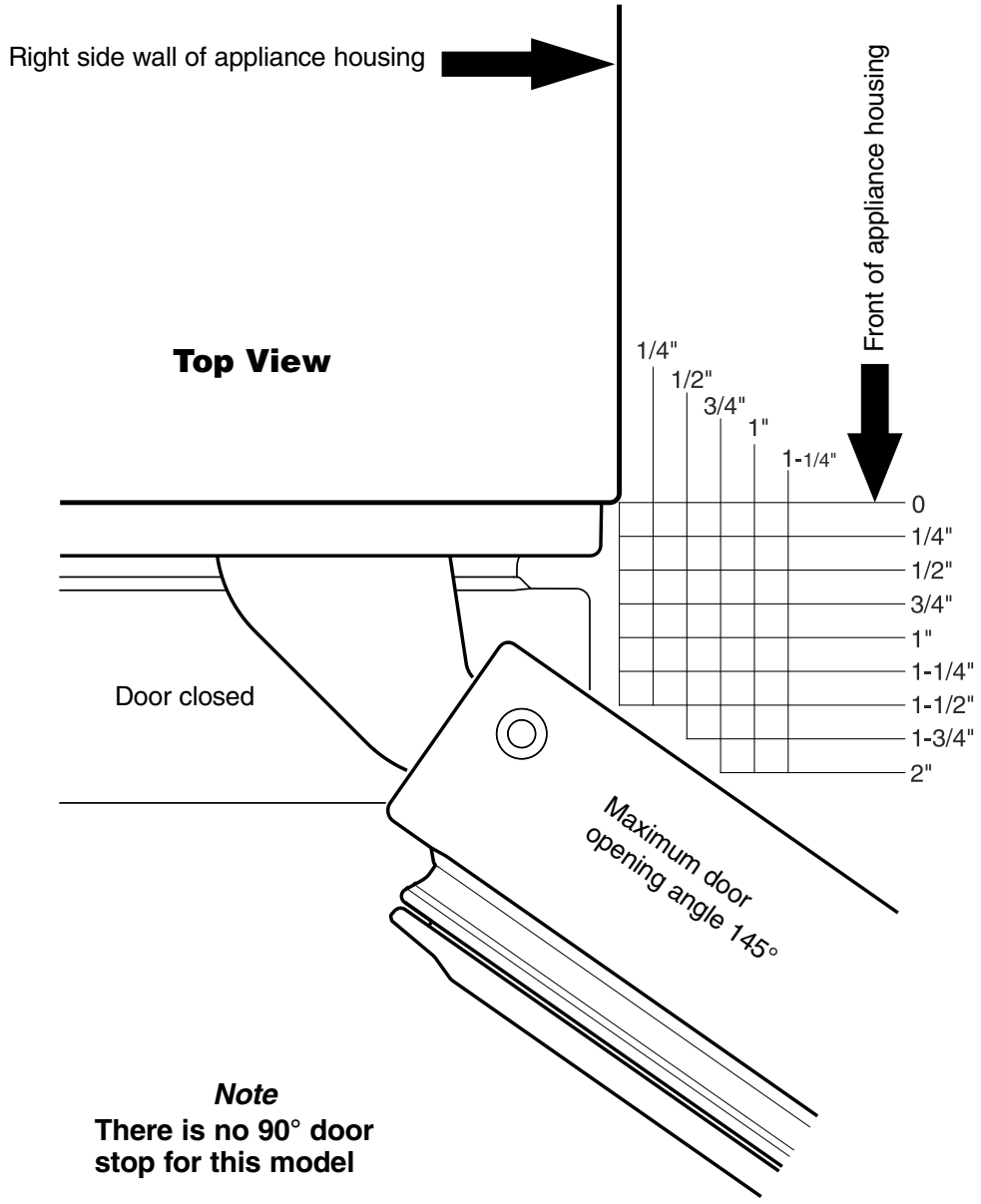

Note
There is no 90° door stop for this model

Door Swing Clearance CS 2062, CBS 2062

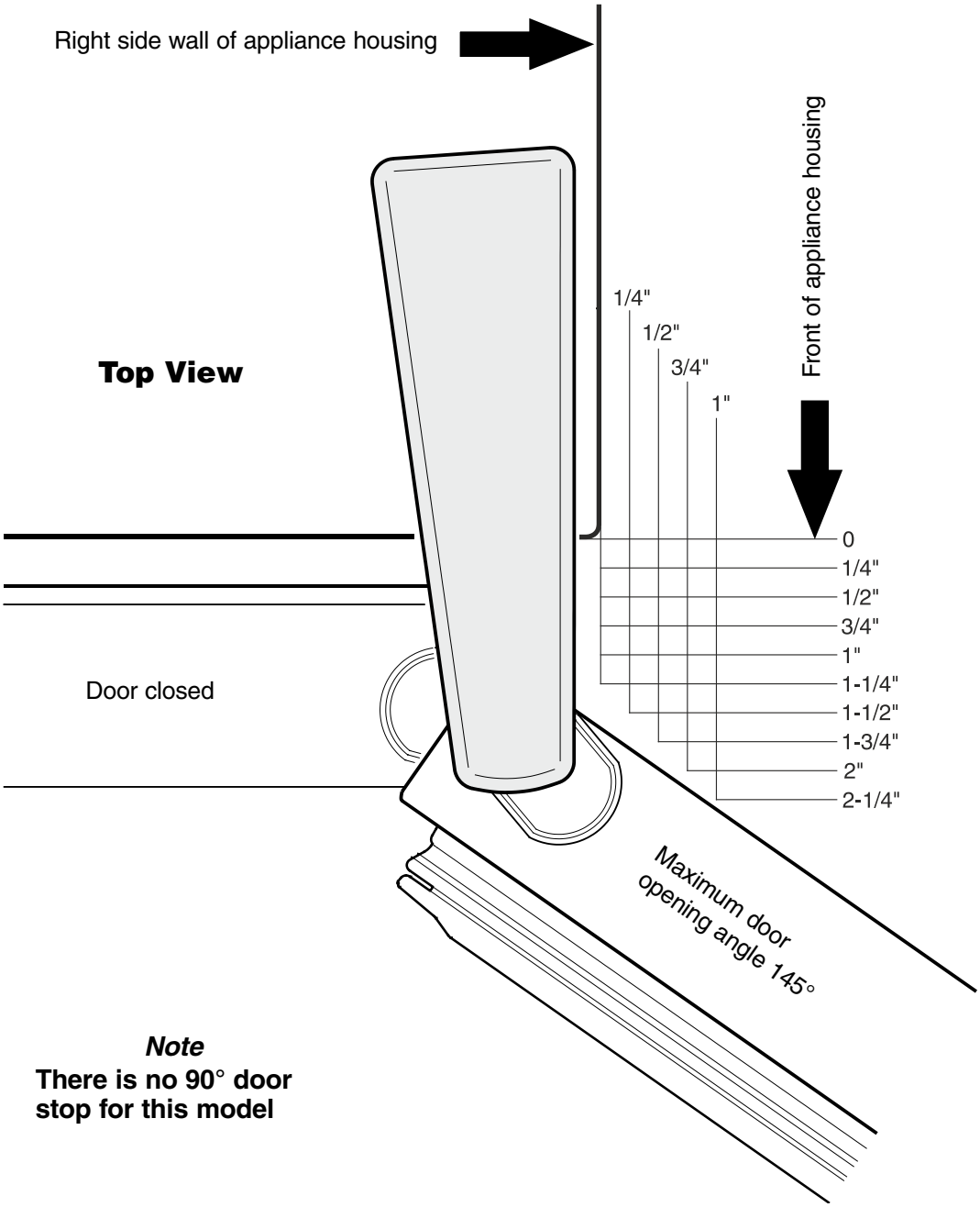

Note
There is no 90° door stop for this model

Accessories

Image	Article number	Name of the item	For use with model
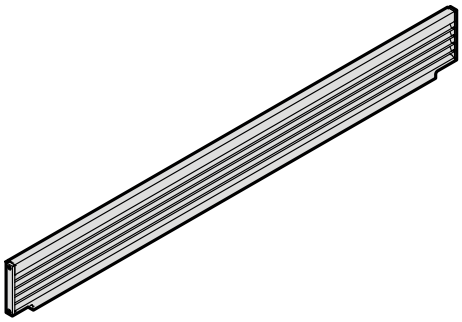	9900 199-00	Decorative grille **84"** recess height.	CS 2062 CBS 2062
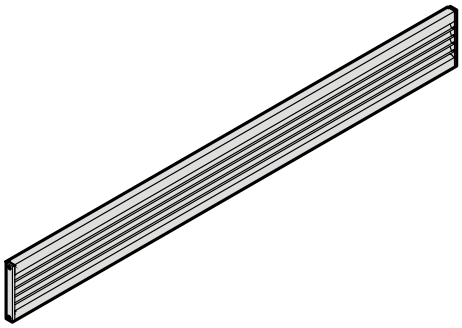	9900 277-00	Decorative grille **84"** recess height.	CS 2060 CS 2061
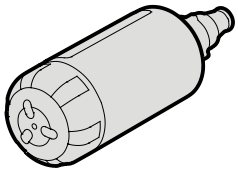	7440 002-00	Water filter	CS 2062 CBS 2062 CS 2060 CS 2061 CS 1660

Freestanding/Semi Built In Models