AR 400 742
Metal housing
600 CFM
Inside installation
Air extraction

Installation accessories
Part# 653556
Additional ø 6" connection piece
Required when installing up to 3 or 4 VL 414 downdraft with AR 400 inline blower.

400 series inline blower
AR 400

- Powerful blower for combination with 400 series ventilation systems such as AL 400 retractable downdraft, VL 414 downdraft and AW/AI 442 professional wall/island hood.
- Quiet blower with high-efficiency BLDC technology.

Output
3 performance output levels and intensive mode: Sound power and sound pressure depending on built-in situation.
Air extraction: 600 CFM.
Power levels depend on the ventilation system.

Features
3 electronically controlled power levels and one intensive mode.
Blower technology with highly
Metal housing, zinc-plated.
Duct connection pieces on air intake side: 1 x ø 6" round, 4 x ø 6" round.
Duct connection piece on air output side: 1 x ø 6" round.
Spare cover to close an air intake included with the blower.
Retaining bracket for ceiling installation or installation on the inner side of a cabinetry comes included with the blower.

Planning notes
AR 400 742 inline blower can only be combined with 400 series ventilation systems such as AL 400 retractable downdraft, VL 414 downdraft and AW/AI 442 professional wall/island hood.
Connection to the respective appliances via network cable.
Installation in the base cabinet: possible in areas with two cabinet drawers or on the floor with a cut-out in the base cabinet. Panel-free toe-kick possible.
Installation in a separate room, attic or crawl space allows for a reduced noise level in the kitchen.
For installation in the basement/ crawl space or an adjacent room, refer to the planning information section for 400 series Ventilation systems on page xx.
When installing a ventilation hood with air extraction mode and a chimney-vented fireplace, the power supply line of the ventilation appliance needs a suitable safety switch.

Rating
Total rating: 210 W.
Total Amps: 2 A.
120 V / 60 Hz
Connecting cable not included. Hard wire required.
16' network cable included.

5x ⌀ 6" (⌀ 150)
2 connecting pieces included
Additional connection piece must be ordered serarately.
Part #653556

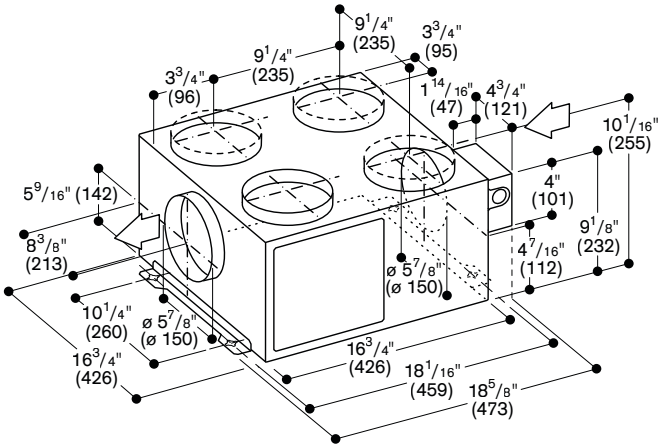

Numbers indicated
inside parenthesis ( ) = mm