MOEN®
COMMERCIAL

Specifications

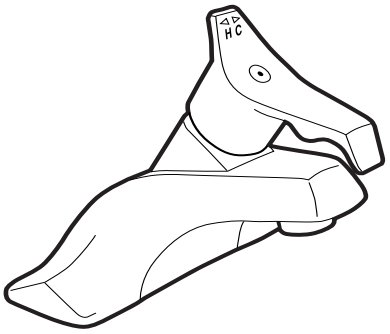

ADA

Single-Handle Lavatory Faucet

Model: 8460

NOTE: DESIGNED TO INSTALL THROUGH 2-1" MIN. DIA. HOLES. 4" ON CENTER

FAUCET DESCRIPTION
- Chrome plated metal construction
- 1/2" IPS connections
- Copper or brass waterways
- Supplied with vandal resistant screw

OPERATION
- Lever style (Easy Grip) handle with hot and cold color indicators

FLOW
- Aerator is limited to 2.2 gpm max (8.3 L/min)

CARTRIDGE
- 1225 cartridge design
- Nonmetallic/nonferrous and stainless steel material

STANDARDS
- Third party certified by IAPMO and CSA to meet ASME A112.18.1M, NSF 61/9, California Proposition 65, and all applicable specifications referenced therein and complies with the requirements of ANSI A117.1

WARRANTY
- Warranted for 5 years against material or manufacturing defects

AjMadison
Your Appliance Authority™
800-570-3355

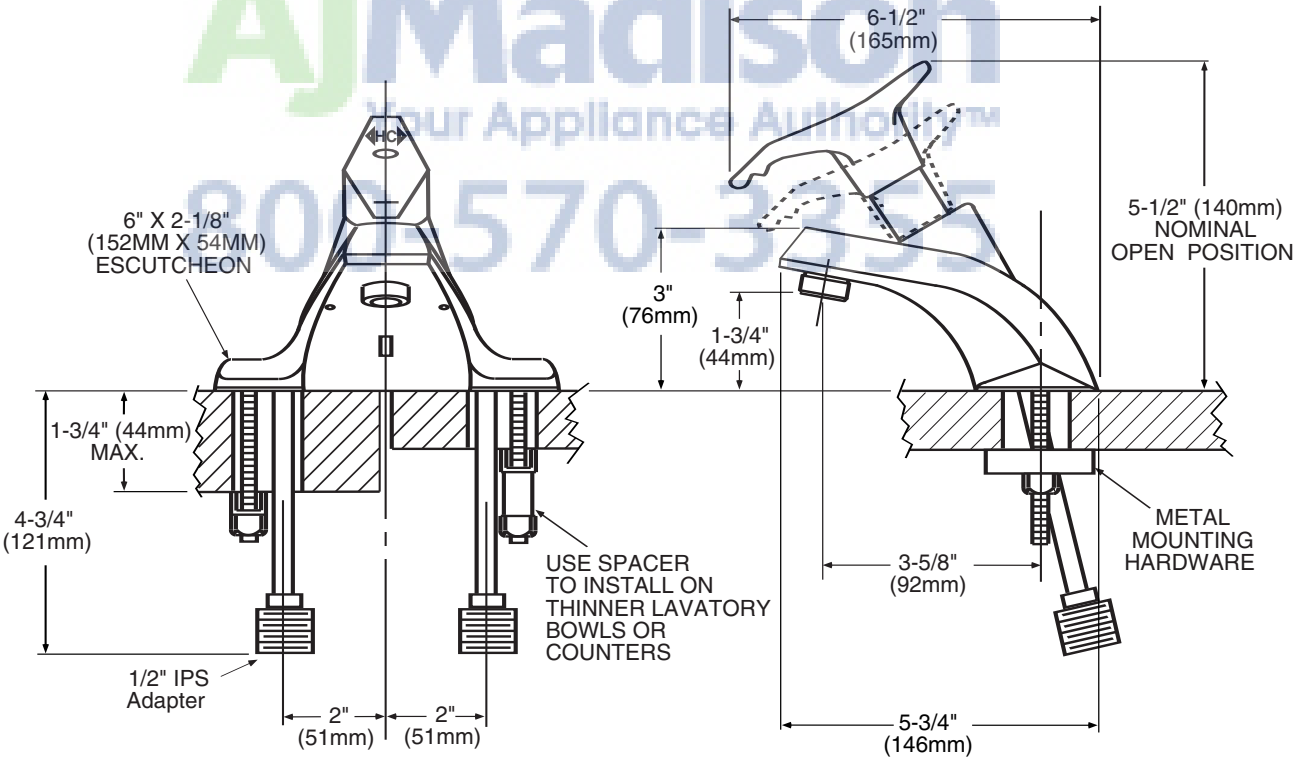

CRITICAL DIMENSIONS

(DO NOT SCALE)