FISHER & PAYKEL
PRODUCT CATALOG
2015

Fisher&Paykel

Fisher&Paykel

A HISTORY OF INNOVATION

Since our founding in 1934, we have grown into a global, design-led company of more than 3,000 people. Designed and engineered in New Zealand, our products are sold in 50 countries around the world. Our design heritage is founded on a pioneering spirit and a culture of curiosity that has challenged conventional appliance design to consistently deliver products tailored to human needs. For us, legacy is about looking into the future, while ensuring what we develop today is aligned to the fundamental principles of sustainable design. We are committed to ongoing research and development. Our culture is one of open innovation, which allows people to work collaboratively to find insights and ideas that connect with our customers and respect our planet.

We live one day at a time.

Cooking
eating
cleaning
washing
drying
hunting
gathering
talking
playing
relaxing.

And then doing it all over again.
Day in, day out.

TURNING ROUTINES INTO EXPERIENCES

Behind every product is a story and that story starts with you. Your home is an expression of who you are and how you live. Our passion is creating better products that turn everyday routines into enjoyable experiences. We understand the dynamic nature of modern living. We deliver products that are adaptable, functional and durable, as well as human. We don't just make things that fit the space provided, we create products that fit the lives lived around them. Live life — we'll take care of the details.

THE SOCIAL KITCHEN

The kitchen is the humble engine room in which we choose to live — where we create, socialize and enjoy the best that life has to offer. Cooking is a social activity. We generally place the key appliances in what we consider to be logical places: the work triangle of cooktop, sink and refrigerator. But we no longer cook in straight lines. We don't cook on conveyor belts. Sometimes we assemble, sometimes we bake, sometimes we stir-fry and sometimes we boil. We don't cook the same way every day: we can be a weekday cook and a weekend gourmet. The work triangle limits our creativity. It's not just about efficiency; sometimes it's about fun. Too many cooks may spoil the broth or they may create a wonderful, social and enjoyable meal. Let's reclaim the kitchen. Let's live outside the triangle.

DESIGNED FOR REAL LIFE

At Fisher & Paykel, we are curious about people—how they live, where they live, what they do and how they use things. This is where hidden insights wait to be uncovered. We are curious about not only the function and performance of our products, but also the emotional role they play in people's lives. For us, design is not a self-serving goal—it is a human endeavour to make life a little bit better.

CONTENTS

Cook	**18**
Built-in Ovens	22
Cooktops	28
Ranges	38
Ventilation Hoods	44
Cook Overview	48

Cool	**54**
ActiveSmart™ Technology	56
CoolDrawer™ Multi-temperature Drawer	58
CoolDrawer™ Features	62
Refrigerators	64
ActiveSmart™ Features	70
Cool Overview	72

Clean	**76**
DishDrawer™ Technology	78
DishDrawer™ Dishwasher	80
DishDrawer™ Features	90
Clean Overview	92

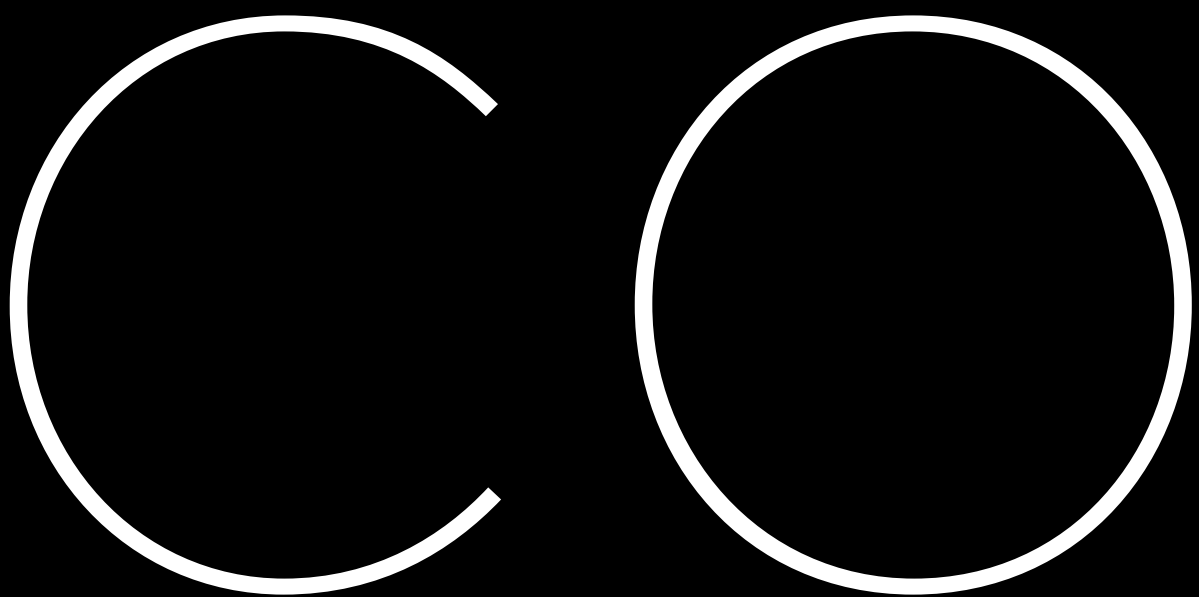

OK

COOK TO CREATE

We see cooking not as a chore, but a creative act. As more of our lives become virtual and people look for ways to make and create things, we design high-performance tools you can rely on and be creative with, that turn everyday meals into creations. Fisher & Paykel products cater for different patterns of use—whether it's mid week convenience or weekend gourmet, heat and eat or a family feast. We understand everyday life and support the lives lived around our products. Cooking is part of our DNA—one part designer, one part chef. We have a passion for food and we are just as interested in making high-performance ovens that perfect your favorite foods as making the process of cooking more enjoyable. Our insights come from real-world use and then the results are tested in our lab daily, with the aim of inventing technologies that deliver the perfect cooking result.

BUILT-IN OVENS

Fisher & Paykel's multifunction Built-in Ovens are designed to perfect your favorite food, with a full range of cooking modes and temperatures providing greater control and more flexibility; and with a selection of generous oven sizes to meet the needs of the most demanding cook. Roasting is an art as well as a science. The difference between rare and medium takes timing, intuition and a well-trained eye. Fisher & Paykel's Built-in Ovens are programmed to quickly heat to a high temperature, browning the meat to create delicious savory flavors before automatically lowering the temperature to deliver a perfect, tender roast every time. Most of our ovens are self-cleaning and include CoolTouch doors with multiple panes of glass and advanced cooling systems that ensure the external surfaces remain safe to the touch.

30″ Built-in Double Oven

Designed for ultimate performance and cooking capability, the 30″ Built-in Oven comes in both single and double models, with a 4 cu.ft. capacity. It features 10 cooking functions, a self-cleaning mode and a catalytic smoke eliminator. Finished in black reflective glass and stainless steel, they blend minimalist design with durability—matching the Fisher & Paykel family of kitchen appliances, from Cooktops to ActiveSmart™ refrigerators, CoolDrawer™ multi-temperature drawers and DishDrawer™ dishwashers.

1 **Perfect Results**

The ultra-fast heating and powerful 4400W grill is optimized by the AeroTech™ convection system, which circulates heat evenly.

2 **Sized to Suit**

4 cu.ft. of capacity makes this oven big enough to cook a turkey and a large tray of roast vegetables.

3 **Designed to Match**

Finished in black reflective glass and stainless steel, these elegant, yet durable ovens match the rest of Fisher & Paykel's coordinated kitchen family.

4 **Easy Cleaning**

No need for harsh chemical cleaners in our ovens; simply remove the racks and set to self-clean.

5 **Precise Control**

Temperature adjustment is easy with smooth, balanced dial movement. Brilliant halogen lighting, plus a large viewing window improve performance and efficiency.

6 **Safe and Sound**

CoolTouch doors are safer and more energy efficient. An advanced heat-reflective coating and innovative cooling system keeps heat inside the oven.

7 **Accessories**

This oven includes a three-piece anti-splatter grill system, a meat probe that automatically stops cooking when the predetermined temperature is reached, and two aluminium baking trays.

24″ Built-in Single Oven

This oven delivers the superior performance and full functionality of a larger model with nine programs to best suit your dish.

1 **Perfect Results**

An electronic thermostat controls temperature variation when cooking, ensuring consistent temperatures throughout the oven and the 3000W Broil provides rapid and consistent results, quickly searing food to seal in flavors and nutrients.

2 **Sized to Suit**

This oven can be placed virtually anywhere and can be installed at a convenient height to suit your kitchen design and preference. With a choice of four shelf positions to give you a range of options for organizing the interior of the oven.

3 **Designed to Match**

Finished in black reflective glass and polished metal, this elegant, yet durable oven matches the other appliances in the larger Fisher & Paykel coordinated kitchen family.

4 **Easy Cleaning**

Simply remove the racking, set to self-clean and the oven will take care of any grease or grime, reducing it to ash that’s easily wiped away with a cloth.

5 **Precise Control**

An electronic thermostat controls temperature variation when cooking, ensuring consistent temperatures.

6 **Safe and Sound**

CoolTouch doors that are made of up to four panes of glass and its own cooling system, ensure it is safe to touch on the outside.

19:30

COOKTOPS

So many things to consider when selecting a cooktop: a look to match your kitchen, a size to fit your space and a fuel type to suit your cooking style. It all comes down to personality and preference. Whether it's the performance and theater of live flame, the precision, control and sleek simplicity of induction, Fisher & Paykel's Cooktop family is designed to provide the right solution. Whatever your choice, there are many configurations and sizes to suit any cooking style. Each product has been designed to deliver great performance — from searing heat to the gentlest of simmers — and all are designed for easy cleaning and with safety in mind.

Flush Gas on Steel Cooktop

This cooktop integrates perfectly into your counter top providing a subtle unobtrusive design. With power levels for everything from a slow simmer for sauces, to an intense heat for steaks and stir-fries, this cooktop combines sleek design with excellent functionality.

1 Perfect Results

This cooktop has five different burners with a variety of strengths. The uniform flame and even heat distribution of the dual flame wok burner combined with highly responsive dials offer precise heat adjustment.

2 Designed to Match

This cooktop provides a flush look with burners recessed into the counter top height integrating into the kitchen and offering an uncluttered work surface. The brushed stainless steel matches the rest of our family of kitchen appliances.

3 Easy Cleaning

These cooktops are designed as a single piece of stainless steel for easy cleaning. Durable and easy to clean, cast iron trivets with rubber feet provide a safe and stable cooking surface.

4 Precise Control

The Auto-ignition system ignites the flame quickly and safely. Innovalve™ technology allows you to adjust the flame with 180 degree gas valve rotation for accurate temperature control.

5 Safe and Sound

The dials will glow red when on, and white when off, showing at a distance which burners are lit. The Auto-reignition system means you don't have to hold down a dial while burners ignite and if a burner goes out, it is automatically relit at the original flame setting.

6 Accessories

A small pot stand and wok support are provided with this cooktop.

Gas on Steel Cooktops

The Gas on Steel Cooktop offers power levels for everything from a slow simmer for sauces, to an intense heat for steaks and stir-fries. Combining the attractiveness of sleek stainless steel with the durability of cast iron trivets, these cooktops support the most avid chef.

1 Perfect Results

The Gas on Steel Cooktop perfects both the slow simmer needed for sauces and the intense heat needed for searing and wok cooking. It comes with five different strength burners.

2 Sized to Suit

With five burners, including simmer, rapid and two wok burners, the Gas on Steel Cooktops provide great cooking flexibility.

3 Designed to Match

The brushed stainless steel blends elegance with durability — matching the rest of our coordinated kitchen family.

4 Easy Cleaning

This cooktop is designed as a singular piece of steel with quick component removal for easy cleaning. Durable and easy to clean, cast iron trivets provide a safe and stable cooking surface. The rubber feet ensure that the cooktop is not scratched when the trivets are placed onto the cooktop.

5 Precise Control

For accurate temperature control, ergonomic dials on the front of the cooktop automatically ignite the flame quickly and safely.

6 Safe and Sound

The auto-reignition system means that if the flame is accidentally extinguished the cooktop will reignite itself. All Fisher & Paykel Gas Cooktops feature electronic ignition ensuring they are quick, reliable and safe.

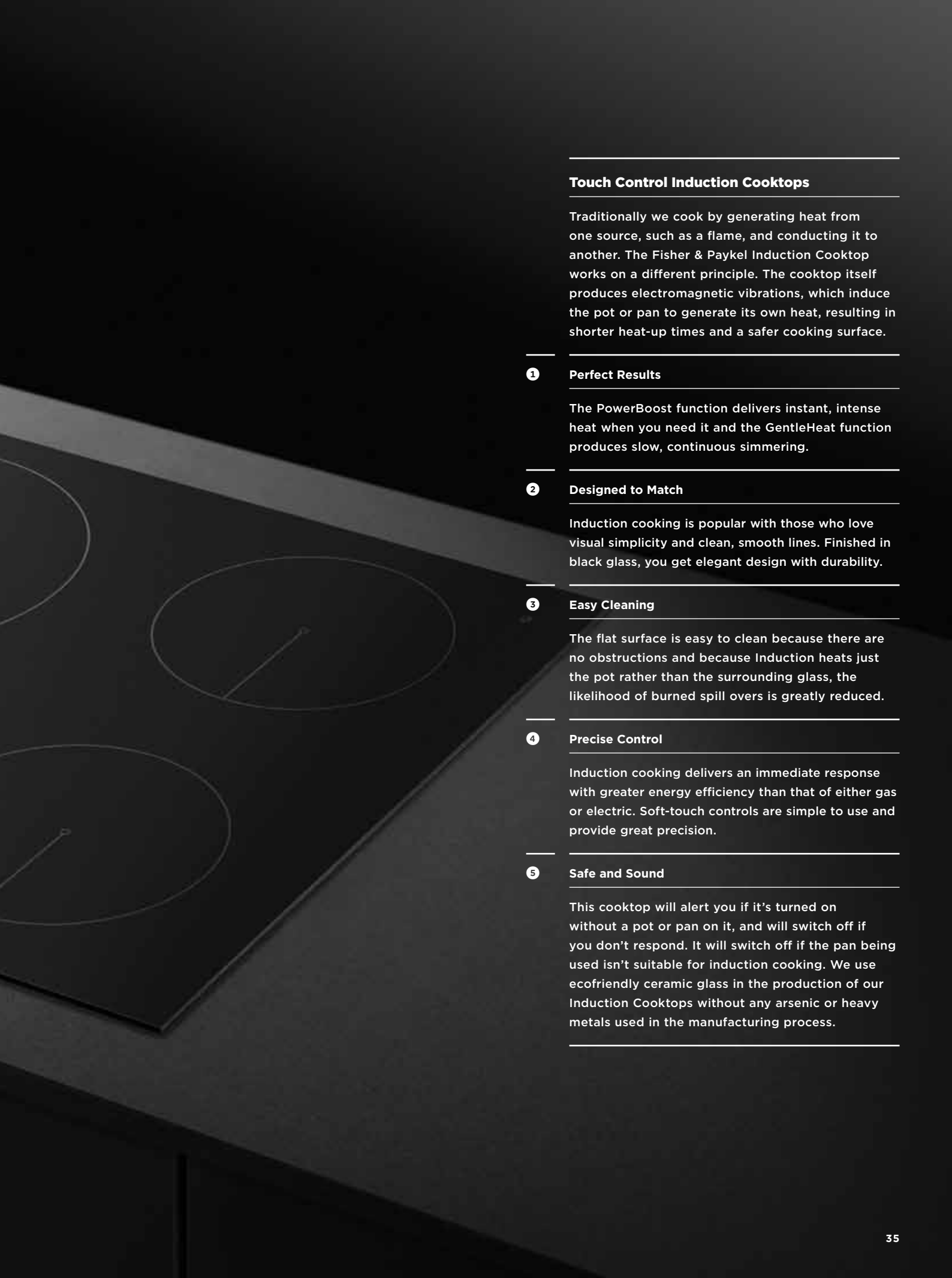

Touch Control Induction Cooktops

Traditionally we cook by generating heat from one source, such as a flame, and conducting it to another. The Fisher & Paykel Induction Cooktop works on a different principle. The cooktop itself produces electromagnetic vibrations, which induce the pot or pan to generate its own heat, resulting in shorter heat-up times and a safer cooking surface.

1. **Perfect Results**

The PowerBoost function delivers instant, intense heat when you need it and the GentleHeat function produces slow, continuous simmering.

2. **Designed to Match**

Induction cooking is popular with those who love visual simplicity and clean, smooth lines. Finished in black glass, you get elegant design with durability.

3. **Easy Cleaning**

The flat surface is easy to clean because there are no obstructions and because Induction heats just the pot rather than the surrounding glass, the likelihood of burned spill overs is greatly reduced.

4. **Precise Control**

Induction cooking delivers an immediate response with greater energy efficiency than that of either gas or electric. Soft-touch controls are simple to use and provide great precision.

5. **Safe and Sound**

This cooktop will alert you if it's turned on without a pot or pan on it, and will switch off if you don't respond. It will switch off if the pan being used isn't suitable for induction cooking. We use ecofriendly ceramic glass in the production of our Induction Cooktops without any arsenic or heavy metals used in the manufacturing process.

Electric Cooktop

1 Perfect Results

Solid performers with superb simmer results, our Electric Cooktop allows you to move pots and pans around simply and quickly while high-speed ribbon elements provide good temperature control from a rapid boil to an extremely low simmer.

2 Sized to Suit

This cooktop has five elements, giving you room to boil, fry, steam and simmer all at once. The perfectly flat surface cools down quickly when switched off, so that the surface can be used as an extra preparation area if needed.

3 Designed to Match

Designed using premium quality materials, the finishes and controls match the rest of our coordinated kitchen family.

4 Easy Cleaning

The flat surface makes our Electric Cooktop very easy to clean. Ceramic glass is very strong, adding to the durability and performance of the cooktop.

5 Precise Control

Easy-to-use dials provide precise temperature control from a rapid boil to an extremely low simmer. Up to two dual elements provide a choice of up to seven cooking zones.

6 Safe and Sound

Hot surface indicators glow until the surface is safe to touch. We use ecofriendly ceramic glass in our cooktops, without any arsenic or heavy metals used in the manufacturing process.

RANGES

On the outside, style is a matter of taste. So we put a little chef on the inside that can't wait to impress. Fisher & Paykel Ranges are visually impressive and give you the flexibility to prepare several courses simultaneously. With large ovens and a choice of gas, ceramic, or induction cooktops these ranges are finessed with clean lines in glass and stainless steel that will complement any modern kitchen.

36″ Range — Gas

This Range gives you the flexibility to prepare several courses simultaneously. With a large gas oven combined with a five burner gas cooktop, the clean lines in black reflective glass and stainless steel complement the style and elegance of any kitchen.

1. **Perfect Results**

   Four functions including bake and convection bake and a powerful 15000 BTU broil gives you professional quality results.

2. **Sized to Suit**

   The 36″ Range is spacious with a 4 cu.ft capacity. A shelving system allows ample space for larger meals.

3. **Designed to Match**

   Designed using premium quality materials and built to last, the black reflective glass and stainless steel blend balanced aesthetic with design for durability.

4. **Easy Cleaning**

   Cleaning is quick and simple. The cooktop is easy to clean as it is made from a single piece of stainless steel that contains spills. The oven door and its inner pane of glass can be removed for easy cleaning and the storage compartment minimizes clutter for oven accessories.

5. **Precise Control**

   Generous metal control dials with a simple, functional interface are positioned on a full stainless steel control panel for precise control over cooking temperatures.

6. **Safe and Sound**

   A CoolTouch door and built-in cooling system ensure the oven door is safe to touch externally. Streamlined trivets let you slide pots and pans without lifting them.

Fisher&Paykel
19:30

30″ Range — Induction

Combining the best of both worlds, the Fisher & Paykel 30″ Induction Range gives you the benefits of an easy to clean, four zone induction cooktop with the flexibility of a large oven. Elegantly designed to complement the Fisher & Paykel built-in product series with clean lines of black glass and stainless steel.

1 Perfect Results

Professional performance is delivered by eight oven functions—perfect for any culinary requirements. The cooktop's PowerBoost function delivers instant, intense heat when you need it and there is also a gentle heat setting for slow, continuous simmering.

2 Sized to Suit

Our 30″ Ranges are spacious, with 3.6 cu.ft of total capacity. A five position shelving system allows ample space for larger meals.

3 Designed to Match

Induction cooking is popular with those who love visual simplicity. This Range is designed to complement the Fisher & Paykel kitchen product family with clean lines of black glass and stainless steel.

4 Easy Cleaning

Cleaning is made simple with the flat surface of the induction cooktop; the self-cleaning oven function and easily removable oven door. The combined warming and storage drawer minimizes clutter for oven accessories.

5 Precise Control

Benefits of induction include fast heat-up times, immediate response and precision cooking; cooler temperatures on the glass; and greater energy efficiency than that of either gas or electric.

6 Safe and Sound

A triple glazed door makes the oven safe to touch; the door and oven cooling system keep heat away from cabinetry; and non-tip shelves reduce the risk of dropping heavy cookware.

19:30
Fisher&Paykel

VENTILATION HOODS

Kitchen inspiration doesn't exist in a vacuum, but simple and responsive extraction is as important as achieving the right look for your kitchen. Designed to complete your kitchen, you can select a Ventilation Hood that best suits your kitchen layout and cooking style. No matter which you choose, all of Fisher & Paykel's ventilation products are built to perform. They have been designed as the perfect partner to our Cooktops and each captures and eliminates cooking odors, vapor and steam effectively. They are easy to use and feature intuitive controls that respond to the touch of a finger.

Fisher&Paykel

Ventilation Hoods

Fisher & Paykel's Ventilation Hoods offer a selection of fan speeds and clever features that quietly and efficiently remove steam, smoke and lingering smells.

1 Effective and Quiet

Odors can linger in the kitchen well after cooking is finished. The practical timer feature keeps the Ventilation Hood working for up to 15 minutes before it automatically turns itself off. (HC36DTXB1 & HC30DTX1).

2 Designed to Match

Fisher & Paykel's Ventilation Hoods are finished in black reflective glass and stainless steel that blends elegant, minimalist aesthetic with design for durability while hiding unsightly filters. The stainless steel Ventilation Hood matches the rest of Fisher & Paykel's family of kitchen appliances.

3 Easy Cleaning

An interior, wipeable plate makes cleaning effortless and multi-layered filters trap grease effectively. Designed for simple removal, the filters are easy to clean and dishwasher safe.

4 Precise Control

The sleek touch-control panel responds to the touch of your finger. Halogen lights provide superb illumination over the entire cooking surface. (HC36DTXB1 & HC30DTX1).

30″ Built-in Ovens

01

02

01
OB30DDEPX2
30″ Double Built-in Oven
H48 ½″ x W29 29/32″ x D23 15/16″

02
OB30SDEPX2
30″ Single Built-in Oven
H27 1/8″ x W29 29/32″ x D23 15/16″

24″ Built-in Oven

01

01
OB24SDPX4
24″ Single Built-in Oven
H24″ x W24″ x D22 29/32″

Microwave Ovens

01

01
CMOH-30SS
30″ Over the Range Microwave
H16 11/32″ x W29 15/16″ x D15 9/32″

Microwave Ovens Cont.

02

03

02
MO-24SS-2
24" Traditional Microwave
H13 3/8" x W24" x D19 1/8"

03
CMO-24SS-2
24" Convection Microwave
H14 7/8" x W24 5/8" x D19"

Microwave Trim Kits

01

02

01
MOTTK-FP
H18 7/8" x W29 11/16" x D24 1/8"
For use with MO-24SS-2
Traditional Microwave

02
CMOTTK-FP
H20 1/2" x W29 11/16" x D20"
For use with CMO-24SS-2
Convection Microwave

Warming Drawer

01

01
OD30WDX2
30" Warming Drawer
H10 1/2" x W29 11/16" x D25 1/16"

Flush Gas on Steel Cooktop

01

01
CG365DWNGACX2 (Natural gas),
CG365DWLPACX2 (LPG)
36″ 5 Burner Gas Cooktop
H3 1/32″ x W35 7/16″ x D20 7/8″

Gas on Steel Cooktops

01

01
CG365DNGX1 (Natural gas),
CG365DLPX1 (LPG)
36″ 5 Burner Gas Cooktop
H2 5/16″ x W35 7/16″ x D20 7/8″

02
CG244DNGX1 (Natural gas),
CG244DLPX1 (LPG)
24″ 4 Burner Gas Cooktop
H2 5/16″ x W23 5/8″ x D20 7/8″
Available March 2015

02

Induction Cooktop

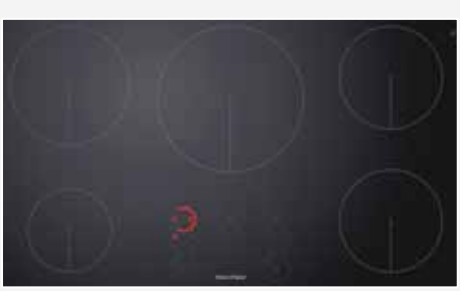

01

01
CI365DTB1
36″ 5 Zone Induction Cooktop
H4 11/32″ x W35 7/16″ x D20 7/8″

Electric Cooktop

01

01
CE365DBX1
36″ 5 Element Electric Cooktop
H4 1/4″ x W35 7/16″ x D20 7/8″

Ranges

01

01
OR36SDBGX2
36″ Gas Range
H35 7/16 – 37 13/32″ x W35 1/8″
x D23 31/32″

02
OR30SDPWIX1
30″ Induction Range
H35 21/32 – 36 11/32″ x W29 7/8″
x D24 7/32″

03
OR30SDPWGX1
30″ Dual Fuel Range
H35 21/32 – 36 11/32″ x W29 7/8″
x D24 7/32″

02

03

Ranges Cont.

04

05

06

07

04
OR30SDPWSX1
30" Electric Range
H35 21/32 – 36 11/32" x W29 7/8" x D24 7/32"

05
OR30SDBMX1
30" Gas Range
H35 21/32 – 36 11/32" x W29 7/8" x D24 7/32"

06
OR24SDPWGX2
24" Dual Fuel Range
H35 17/32 – 36 7/32" x W23 7/8" x D24 13/16"

07
OR24SDMBGX2
24" Gas Range
H35 7/16 – 36 7/32" x W23 7/8" x D24 3/32"

Ventilation Hoods

01

02

03

⑴
HC36DTXB1
36″ Ventilation
H25 – 40 ¾″ x W35 7/16″ x D19 1 1/16″

⑵
HC30DTX1
30″ Ventilation
H23 ⅜ – 40 ¼″ x W29 17/32″ x D19 1 1/16″

⑶
DD-36SS
36″ Downdraft
H8 ¼″ x W36″ x D1 ½″

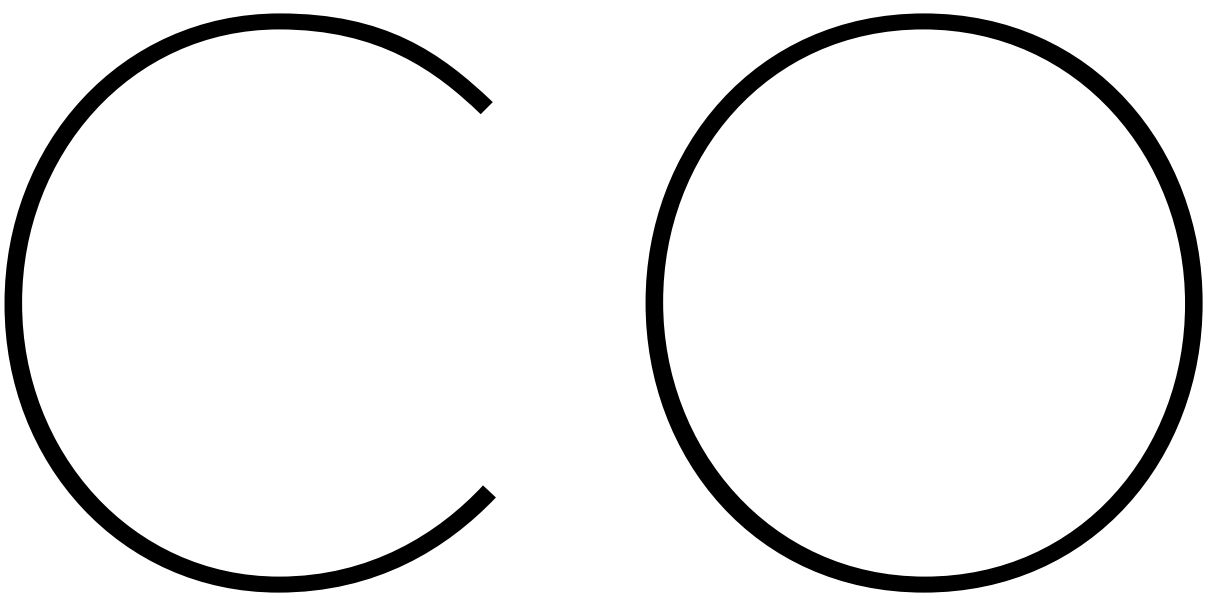

WE CONTROL THE WEATHER

At the heart of Fisher & Paykel's Refrigerator-Freezers is the ability to sense and respond to daily use in an intelligent way. The combination of temperature sensors with smart electronics and variable-speed fans creates a controlled environment and optimum temperature for better food care. We call it ActiveSmart™ technology. Your refrigerator door is the most used door in your home and, every time it is opened, the temperature changes around your food. The challenge is maintaining a consistent and controlled environment despite ongoing changes inside and outside the refrigerator. ActiveSmart™ achieves this through constantly monitoring how you and your family use your refrigerator, adjusting airflow to maintain a stable and even temperature. So despite highs, lows and occasional gusty winds, when it comes to your refrigerator, let ActiveSmart™ control the weather to deliver better food care.

ACTIVESMART™
TECHNOLOGY

Fisher&Paykel

CoolDrawer™ Multi-temperature Drawer

The CoolDrawer™ multi-temperature drawer has been designed to change from refrigerator to freezer at the touch of a button. It is built on the concept of distributed refrigeration, combining ActiveSmart™ technology with a drawer-based design that can be placed anywhere in the kitchen, home or entertainment area. The CoolDrawer™ provides five temperature settings to deliver total flexibility—freezer, chill, refrigerator, pantry and wine modes, merging intelligence with convenience.

❶ **Innovative**

The multi-temperature CoolDrawer™ is a world-first in refrigeration technology.

❷ **Convenient**

Five temperature settings can be tailored to the needs of your food: freezer, chill, refrigerator, pantry and wine mode, combining intelligence with convenience.

❸ **Ergonomic**

There is easy access at waist height, with smooth-running drawers.

❹ **Intuitive**

The easy-to-use electronic interface can change the temperature at the touch of a button.

❺ **Flexible**

This innovation complements your existing refrigeration and enhances your kitchen design to suit your lifestyle.

❻ **Precise**

Highly engineered finishing ensures a ⅛″ clearance between front panels, as demanded by professional cabinetmakers.

Fisher&Paykel

ARROZ
BOMBA
lock
colder
warmer
freezer
chill
fridge
pantry
wine

CoolDrawer™ Features

❶ Freezer Mode

This mode is ideal for general frozen food storage with the added flexibility of three freezer functions—bottle chill, fast freeze and deep freeze. Freezer Mode is set at -0°F for longer-term storage of frozen items.

❷ Chill Mode

Chill Mode sets the compartment to a temperature perfect for highly perishable meats, poultry and seafood. For these types of food it is ideal to store them at a temperature as close to freezing as possible to retain their vital freshness. Chill Mode sets the compartment at 31°F, just above the freezing temperature for meat.

❸ Fridge Mode

This mode provides the ideal storage for most foods requiring normal refrigeration, such as fruit and vegetables, dairy products, processed meats and drinks. The compact upper storage tray is a perfect place for sensitive foods such as peaches, cherries, cheeses and deli items; the tall bin is ideal for large bottles and containers.

❹ **Pantry Mode**

This is designed for foods that require a cool, dark place for storage, such as tropical fruits, tomatoes, bananas, bread and cereals. Pantry Mode provides a solution for all those foods that you didn't previously know what to do with and have always resorted to storing on the countertop or in the cupboard. This setting offers a stable storage environment at 54°F, making it ideal for sensitive foods.

❺ **Wine Mode**

Using the innovative Wine Mode, connoisseurs can take advantage of special settings that preserve and present wine at its optimum temperature. This mode is ideal for long-term storage of all wine at 54°F and offers two temperature selections for short-term storage.

French Door Refrigerators

This series has been designed to maximize space as well as access. With new water dispenser styling and SmartTouch controls, these refrigerators are designed to match with our family of kitchen appliances.

❶ **Fresher Food for Longer**

ActiveSmart™ technology helps keep your food fresher for longer by constantly monitoring your refrigerator and adapting to maintain a controlled environment and optimum temperature.

❷ **Designed to Match**

The high quality stainless steel, unique surround kits, black finish and the chrome strip detail of the slimline water dispenser, all reflect the styling of our family of kitchen appliances.

❸ **Easy Living**

These refrigerators adapt to suit your lifestyle by streamlining food preparation and organization with SmartTouch controls, flexible shelving and storage options and slide out bins and trays.

❹ **Sized to Suit**

Fisher & Paykel French Door Refrigerators are available in 36″ and 32″ widths. They can sit flush with your counter top with ultra flat doors and concealed hinges.

❺ **Easy Cleaning**

Removable, spill safe glass shelves are easy to clean and contain drips and spills. Storage bins and EZKleen stainless steel doors just need a wipe to keep spotless.

❻ **Efficient**

ActiveSmart™ refrigerators intelligently adapt to daily use to save energy, cooling and defrosting only when they need to without compromising on food care. The 36″ refrigerator is Energy Star rated.

Bottom Freezer Refrigerators

This series has been designed for what you use most often. The upper refrigerator enables easy access to everyday items. With new water dispenser styling and SmartTouch controls, these refrigerators are designed to match with our family of kitchen appliances.

❶ **Fresher Food for Longer**

ActiveSmart™ technology helps keep your food fresher for longer by constantly monitoring your refrigerator and adapting to maintain a controlled environment and optimum temperature.

❷ **Designed to Match**

The high quality stainless steel, unique surround kits, black finish and the chrome strip detail of the slimline water dispenser, all reflect the styling of our family of kitchen appliances.

❸ **Easy Living**

These refrigerators adapt to suit your lifestyle by streamlining food preparation and organization with SmartTouch controls, flexible shelving and storage options and slide out bins and trays.

❹ **Sized to Suit**

Available in 25″ and 32″ widths these refrigerators suit almost any home. They can sit flush with your counter top, with ultra flat doors and concealed hinges.

❺ **Easy Cleaning**

Removable, spill safe glass shelves are easy to clean and contain drips and spills. Storage bins and EZKleen stainless steel doors just need a wipe to keep spotless.

❻ **Efficient**

ActiveSmart™ refrigerators intelligently adapt to daily use to save energy, cooling and defrosting only when they need to without compromising on food care. The 32″ refrigerators are Energy Star rated.

SURROUND KIT

The refrigeration Surround Kit helps create a seamless connection between your appliance and its surrounding cabinetry. Available in a stainless steel finish, the kit frames and complements the product. A Joiner Kit can also be used to join two refrigerators. For more information visit fisherpaykel.com

ActiveSmart™ Features

❶ ActiveSmart™ Technology

ActiveSmart™ technology is the combination of temperature sensors with smart electronics and variable speed fans that create a controlled environment and optimum temperature to keep food fresher longer.

ACTIVESMART™
TECHNOLOGY

❷ SmartTouch Control Panel

For easy access, the new SmartTouch control panel is placed in the inside front of the refrigerator. These controls have been designed to be intuitively simple and easy to use.

❸ Ultra Slim Water Dispenser

The new slimline water dispenser is now even easier to use—the angled water delivery still means that almost any size or shape of vessel can be filled, while taking up no storage space in your refrigerator door. The black finish reflects the styling of Fisher & Paykel's family of kitchen appliances.

❹ Soft-close Doors

No more slamming refrigerator doors or having the door left open with soft-close hinges on the French Door Ice & Water models.

❺ **Ice Boost**

In Ice & Water models, the Ice Boost function automatically delivers up to 25% more ice each day* into a dedicated bin that can be easily customized to store different volumes.

*compared to current Fisher & Paykel Ice & Water models

❻ **Humidity Control System**

The Humidity Control System together with the cool and consistent temperature delivered by ActiveSmart™ technology creates the perfect microclimate in each produce bin, maintaining fruit and vegetable quality at just the right humidity and temperature level.

❼ **Adaptive Defrost**

Adaptive defrost means that there is no need for vacation mode settings. Your refrigerator intelligently selects the best time to defrost based on how it is being used. When you are away it will use less energy as it recognizes lower levels of use and defrosts less often.

❽ **Storage Flexibility**

Smart refrigerator organization and food preparation are streamlined with best in class features such as flexible shelving, flexible storage options and easy to access bins and trays on full extension runners.

CoolDrawer™ Multi-temperature Drawer

01

01

RB36S25MKIW1
36" CoolDrawer™
H25 3/16" x W33 21/32" x D21 15/16"
(Excluding drawer panel, including power cord)

Optional Stainless Steel Pre-finished Door
H18" x W35" x D1 1/16"

Ice & Water French Door Refrigerators

01

01

RF201ADUSX5
French Door Refrigerator
H70 15/32" x W35 7/16" x D27 3/8"
(Dimensions excluding handles)
Flat door

Most Efficient 2015 www.energystar.gov

02

RF170ADUSX4
French Door Refrigerator
H67 17/32" x W31 3/32" x D27 3/8"
(Dimensions excluding handles)
Flat door

02

French Door Refrigerators

01

02

01
RF201ADX5
French Door Refrigerator
H70 15/32" x W35 7/16" x D27 3/8"
(Dimensions excluding handles)
Flat door

Most Efficient 2015
ENERGY STAR www.energystar.gov

02
RF170ADX4
French Door Refrigerator
H67 17/32" x W31 3/32" x D27 3/8"
(Dimensions excluding handles)
Flat door

Ice & Water Bottom Freezer Refrigerators

01

01
RF170WDRUX5,
RF170WDLUX5
Bottom Freezer Refrigerator
H67 17/32" x W31 3/32" x D27 3/8"
(Dimensions excluding handles)
Flat door

ENERGY STAR

Ice & Water Bottom Freezer Refrigerators Cont.

02

03

02
RF135BDRUX4,
RF135BDLUX4
Bottom Freezer Refrigerator
H67 17/32" x W25" x D28 3/8"
(Dimensions excluding handles)
Flat door

03
E522BRXU5,
E522BLXU5
Bottom Freezer Refrigerator
H67 1/8" x W31 3/32" x D28 5/32"
(Dimensions excluding handles)
Curved door

Bottom Freezer Refrigerators

01

01
RF170WDRX5,
RF170WDLX5
Bottom Freezer Refrigerator
H67 17/32" x W31 3/32" x D27 3/8"
(Dimensions excluding handles)
Flat door

Bottom Freezer Refrigerators Cont.

02

03

04

02
RF135BDRX4,
RF135BDLX4
Bottom Freezer Refrigerator
H67 17/32" x W25" x D27 3/8"
(Dimensions excluding handles)
Flat door

03
E522BRX5,
E522BLX5
Bottom Freezer Refrigerator
H66 15/16" x W31 3/32" x D28 5/32"
(Dimensions excluding handles)
Curved door

04
E522BRE5,
E522BLE5
Bottom Freezer Refrigerator
H66 15/16" x W31 3/32" x D28 5/32"
(Dimensions excluding handles)
Curved door

CLE

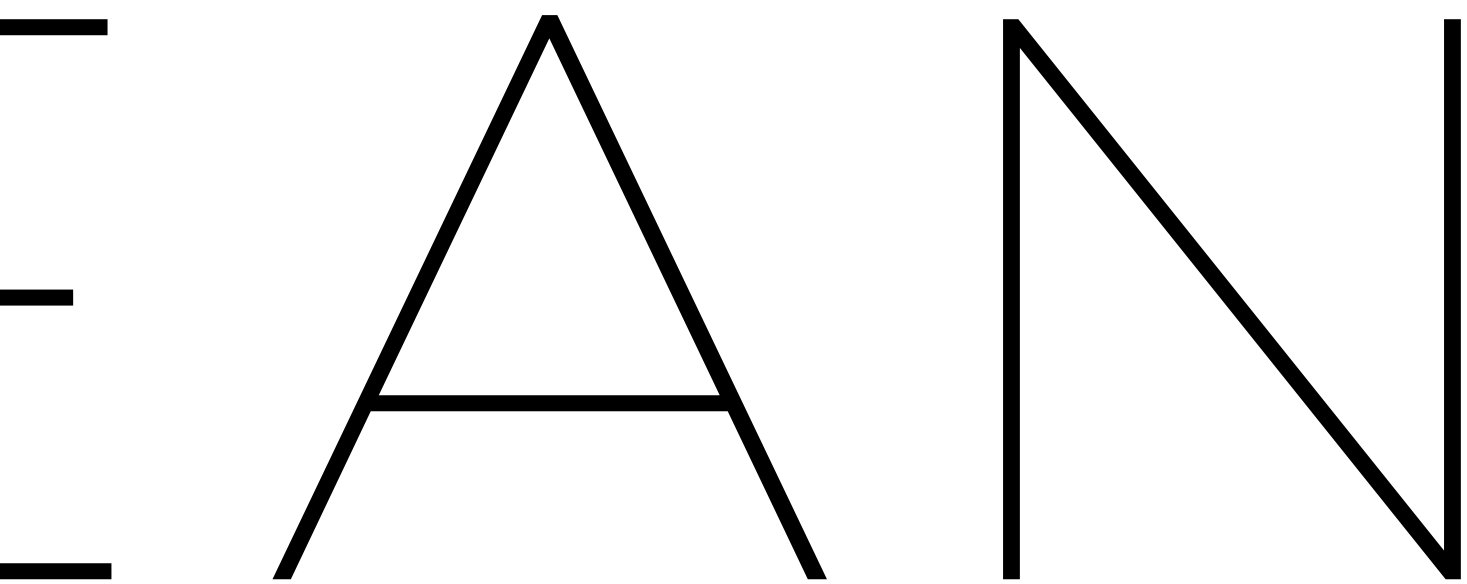

WE LIVE OUT OF DRAWERS

Fisher & Paykel DishDrawer™ dishwashers are designed to make doing the dishes easier than ever before. The combination of a drawer-based system with smart electronics and independent wash technology delivers superior cleaning and better ergonomics. We call it DishDrawer™ technology. Each of our DishDrawer™ products is a self-contained dishwasher with technology that allows traditional double-format or separate modules to be configured at an ergonomic height, allowing complete design freedom. Wide, tall, double and single-drawer options allow you to choose the combination that works best for your lifestyle. The dishwashers in this series can be concealed easily behind kitchen cabinetry to seamlessly blend in with your kitchen and the ergonomic design minimizes bending by requiring less movement to open, load and close.

DISHDRAWER™
TECHNOLOGY

DishDrawer™ Wide

Designed for the whole family, the DishDrawer™ Wide dishwasher complements the Fisher & Paykel 36″ product series to deliver a total kitchen solution. Providing space for nine place settings, the DishDrawer™ Wide is suited to medium-sized households and can be partnered with additional drawers to cater for larger families.

❶ Innovative

Before washing begins, detergent passes through the world's first flow-through dispenser to ensure it is thoroughly dissolved, providing a faster, more hygienic wash with no hint of detergent burn.

❷ Convenient

This model is taller than the standard DishDrawer™ dishwasher, so you can fit large plates up to 12 7/16″ in diameter. Racking is designed to hold long utensils and can fold away to free up space.

❸ Ergonomic

The DishDrawer™ is as easy to open and close as a kitchen drawer and conveniently positioned at countertop height so loading and unloading requires minimal bending. Easy-to-use folding tines allow you to place large pots, platters and bowls into the drawer with ease.

❹ Efficient

This model has the choice of nine wash programs, including Eco options to minimize water and energy usage.

❺ Safe

For added safety, a key lock and child lock are included.

❻ Ecofriendly

This dishwasher uses only 3.5 gallons of water on a Normal Eco wash program and is ENERGY STAR rated CEE tier 1 for energy efficiency and cleaning and drying performance.

DishDrawer™ Tall

This model is designed for extra headroom. The increased drawer height fits 13″ plates, making cleaning up after dinner parties a breeze. The DishDrawer™ Tall dishwasher can also easily accommodate oversized platters and extra-long stemmed glasses.

❶ **Innovative**

Before washing begins, detergent passes through the world's first flow-through dispenser to ensure it is thoroughly dissolved, providing a faster, more hygienic wash with no hint of detergent burn.

❷ **Convenient**

This model is taller than the standard DishDrawer™ dishwasher, so you can fit in large plates up to 13″ in diameter. Racking is designed to hold long utensils and can fold away to free up space.

❸ **Ergonomic**

The DishDrawer™ is as easy to open and close as a kitchen drawer and conveniently positioned at countertop height so loading and unloading requires minimal bending. Easy-to-use folding tines allow you to place large pots, platters and bowls into the drawer with ease.

❹ **Efficient**

This model has the choice of nine wash programs, including Eco options to minimize water and energy usage.

❺ **Safe**

For added safety, a key lock and child lock are included.

❻ **Ecofriendly**

This dishwasher uses only two gallons of water on a Normal Eco wash program and is ENERGY STAR rated CEE tier 1 for energy efficiency and cleaning and drying performance.

DishDrawer™ Double

Designed to fit existing kitchen cabinetry, the DishDrawer™ Double dishwasher has comparable dimensions to those of traditional dishwashers but provides the benefit of two independent drawers for added convenience and ergonomics.

❶ **Innovative**

This dishwasher is a world's first in terms of design and configuration. Before washing begins, detergent passes through the world's first flow-through dispenser to ensure it is thoroughly dissolved, providing a faster, more hygienic wash with no hint of detergent burn.

❷ **Convenient**

The DishDrawer™ Double dishwasher lets the user match the wash program to the exact load type in each drawer.

❸ **Ergonomic**

The DishDrawer™ is as easy to open and close as a kitchen drawer and conveniently positioned at countertop height so loading and unloading requires minimal bending. Easy-to-use folding tines allow you to place large pots, platters and bowls into the drawer with ease.

❹ **Efficient**

This model offers the choice of nine wash programs, including Eco options to minimize water and energy usage.

❺ **Safe**

For added safety, a key lock and child lock are included.

❻ **Ecofriendly**

This dishwasher uses only two gallons of water per drawer on a Normal Eco wash program and is ENERGY STAR rated CEE tier 1 for energy efficiency and cleaning and drying performance.

Fisher&Paykel

INTEGRATED MODELS

The integrated product solution enables seamless fitting between Fisher & Paykel products and your kitchen cabinetry. Your chosen aesthetic can extend beyond storage spaces to enable DishDrawer™ and CoolDrawer™ to blend in with your kitchen environment.

DishDrawer™ Features

❶ Independent Drawers

An independent drawer-based dishwashing platform is part of what makes the DishDrawer™ dishwasher unique. At countertop height, drawers glide open for easy access, visibility and better ergonomics. In DishDrawer™ Double dishwashers, both drawers operate independently so different wash cycles can operate simultaneously to accommodate a variety of loads. Glasses, pots and pans can be washed in separate drawers at the same time.

❷ SmartDrive™ Wash Mechanism

The unique brushless DC motor acts as both a wash pump and a drain pump, which means fewer moving parts and greater reliability. The pump brings water into the spray arm, which rotates at different speeds depending on the wash cycle selected, to deliver a superior clean and better dish care. In the DishDrawer™ Wide dishwasher, two independent spray arms force water throughout the tub, ensuring maximum efficiency and ultimate wash performance.

❸ Nine Wash Options

All DishDrawer™ dishwashers feature nine wash programs: Rinse, Fast Eco, Fast, Delicate Eco, Delicate, Normal Eco, Normal, Heavy Eco, Heavy. The range of settings enables the DishDrawer™ dishwasher to wash everything from fine glass and crystal to heavily soiled pots and pans at the touch of a button. Primary and secondary controls provide a simple interface for program selection and operation, while the ‘delay’ start setting means the dishes can be done when it’s most convenient.

❹ **Flow-through Detergent Dispenser**

The DishDrawer™ dishwasher detergent dispenser ensures that undissolved detergent does not enter into the tub; instead, it is mixed as the machine fills with water. This not only cleans each load better but also reduces the possibility of damaging delicate items such as aluminium, cutlery or porcelain glazes.

❺ **Superior Filtration**

One of the challenges in all dishwashers is a robust filter system that removes debris and avoids blocking. Together, the kidney filter and overmoulded filter plate create a firm seal to ensure that debris does not enter the wash mechanism and cause backflow. It is designed to be removable for easy and hygienic cleaning.

❻ **Adjustable Racking System**

The DishDrawer™ dishwasher includes a range of flexible racking options. The cutlery basket can be customized for different utensils. Folding tines can be folded flat to accommodate a full load of pots or be folded upwards to hold glassware. Pitch-adjustable racks can accommodate normal plates, deep bowls or even slide completely out of the way. Wine glass holders ensure that short and long stemmed glasses are secure throughout the wash. Added retainer clips are ideal for holding chopping boards in position.

❼ **Safety Features**

The DishDrawer™ dishwasher incorporates unique safety features such as a child lock which both locks the drawer to prevent opening and disables the buttons. In addition, it includes three-stage flood protection: the high-strength hose withstands water pressure several times greater than normal, overfill detection cuts the water supply if limits are exceeded and the back-up switch activates the drain pump to remove any excess water.

DishDrawer™ Wide Dishwashers

01

02

01
DD36SDFTX2
H18 13⁄16″ x W35 1⁄4″ x D22 15⁄32″

02
DD36STI2
H18 13⁄16″ x W33 21⁄32″ x
D22 13⁄32 – 22 9⁄16″
Apply your own cabinetry façade and handle — not included

DishDrawer™ Tall Double Dishwashers

01

02

03

04

01
DD24DDFTX7
H34 – 36 3⁄8″ x W23 9⁄32″ x D22 15⁄32″

02
DD24DTI7,
DD24DHTI7
H34 – 36 3⁄8″ x W23 19⁄32″ x
D22 13⁄32 – 22 9⁄16″
Apply your own cabinetry façade and handle — not included

03
DD24DCTX7,
DD24DCHTX7
H34 – 36 3⁄8″ x W23 19⁄32″ x D22 15⁄32″

04
DD24DCTB7
H34 – 36 3⁄8″ x W23 19⁄32″ x D22 9⁄16″

DishDrawer™ Tall Double Dishwashers Cont.

05

05
DD24DCTW7
H34 – 36 3/8″ x W23 19/32″ x D22 9/16″

DishDrawer™ Tall Single Dishwashers

01

02

03

04

05

01
DD24SDFTX7
H18 13/16″ x W23 19/32″ x D22 15/32″

02
DD24STI7, DD24SHTI7
H17 7/8 – 18 13/16″ x W23 19/32″ x D22 13/32 – 22 9/16″
Apply your own cabinetry façade and handle — not included

03
DD24SCTX7, DD24SCHTX7
H17 7/8″ x W23 19/32″ x D22 9/16″

04
DD24SCTB7
H17 7/8″ x W23 19/32″ x D22 9/16″

05
DD24SCTW7
H17 7/8″ x W23 19/32″ x D22 9/16″

DishDrawer™ Double Dishwashers

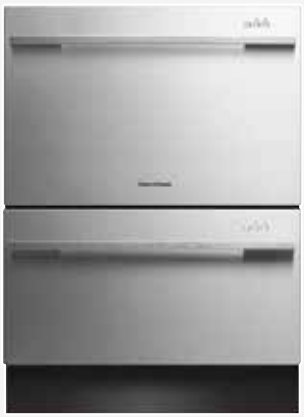

01

02

03

04

05

01
DD24DDFX7
H32 9/32 – 34 21/34" x W23 19/32" x D22 15/32"

02
DD24DI7
H32 9/32 – 34 21/34" x W23 19/32" x D22 13/32 – 22 9/16"
Apply your own cabinetry façade and handle — not included

03
DD24DCX7
H32 9/32 – 34 21/32" x W23 19/32" x D22 9/16"

04
DD24DCB7
H32 9/32 – 34 21/32" x W23 19/32" x D22 9/16"

05
DD24DCW7
H32 9/32 – 34 21/32" x W23 19/32" x D22 9/16"

DishDrawer™ Single Dishwashers

01

02

03

04

05

01
DD24SDFX7
H16 5⁄32″ x W23 19⁄32″ x D22 15⁄32″

02
DD24SI7
H16 5⁄32″ x W23 19⁄32″ x D22 13⁄32 – 22 9⁄16″
Apply your own cabinetry façade and handle — not included

03
DD24SCX7
H16 5⁄32″ x W23 19⁄32″ x D22 9⁄16″

04
DD24SCB7
H16 5⁄32″ x W23 19⁄32″ x D22 9⁄16″

05
DD24SCW7
H16 5⁄32″ x W23 19⁄32″ x D22 9⁄16″

SPECIFICATIONS

Cook	**98**
Specifications	**100**
Built-in Ovens	100
Cooktops	104
Ranges	107
Ventilation Hoods	111
Dimensions	**114**
Built-in Ovens	114
Cooktops	117
Ranges	120
Ventilation Hoods	122

Cool	**124**
Specifications	**126**
CoolDrawer™ Multi-temperature Drawer	126
French Door Refrigerators	127
Ice & Water Refrigerators	129
Bottom Freezer Refrigerators	131
Dimensions	**134**
CoolDrawer™ Multi-temperature Drawer	134
French Door Refrigerators	134
Ice & Water Refrigerators	135
Bottom Freezer Refrigerators	135

Clean	**138**
Specifications	**140**
DishDrawer™ Wide Dishwashers	140
DishDrawer™ Tall Dishwashers	141
DishDrawer™ Double Dishwashers	145
DishDrawer™ Single Dishwashers	147
Dimensions	**150**
DishDrawer™ Wide Dishwashers	150
DishDrawer™ Tall Dishwashers	151
DishDrawer™ Double Dishwashers	154
DishDrawer™ Single Dishwashers	155

COOK

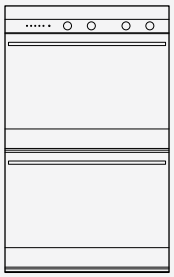

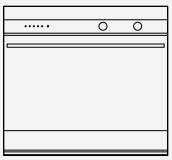

Type of appliance	30" Double Built-in Oven	30" Single Built-in Oven
Model no.	**OB30DDEPX2**	**OB30SDEPX2**
Finish	**Stainless steel Black reflective glass**	**Stainless steel Black reflective glass**
Dimensions	H48 1/2" x W29 29/32" x D23 15/16"	H27 1/8" x W29 29/32" x D23 15/16"
Total capacity	4 + 4 cu.ft	4 cu.ft
Shelf positions	8 per cavity	8
Oven functions	10 + Self-clean	10 + Self-clean
Aero™ Bake	●	●
Aero™ Broil	●	●
Aero™ Pastry	●	●
Bake	●	●
Broil	●	●
Maxi Broil	●	●
Pastry Bake	●	●
Roast	●	●
TrueAero™	●	●
Warm	●	●
Self-clean	●	●
Performance		
Broil	4400W	4400W
AeroTech™ cooking system	●	●
Cleaning		
Acid resistant graphite enamel	●	●
Self-clean	●	●
Removable shelf runners	●	●
Removable oven door/s	●	●
Safety		
Glazed door	CoolTouch quadruple glazed	CoolTouch quadruple glazed
Door and cavity cooling system	●	●
Non-tip shelves	●	●
Control panel key lock	●	●
Catalytic venting system	●	●
Controls		
Electronic clock	●	●
Automatic cooking/minute timer	●	●
Electronic temperature control	●	●
Illuminated halo dials	●	●
Halogen lights	3 x 20W per cavity	3 x 20W
Sabbath mode	●	●
Power requirements		
Supply voltage	120–240V	120–240V
Supply frequency	60Hz	60Hz
AMP draw	38.3A	19.4A
Accessories		
Telescopic sliding runners	5 sets	3 sets
Two piece anti-splatter broil system	2	●
Cooking probe	●	●
Warranty	2 years	2 years

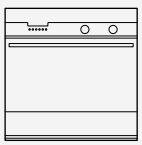

Type of appliance	**24″ Single Built-in Oven**
Model no.	**OB24SDPX4**
Finish	**Stainless steel** **Black reflective glass**
Dimensions	H24″ x W24″ x D22 29/32″
Total capacity	2 cu.ft
Shelf positions	4
Oven functions	6 + Self-clean
Bake	●
Convection Bake	●
Broil	●
Convection Broil	●
Convection Double Broil	●
Defrost	●
Self-clean	●
Performance	
Broil	3000W
Convection cooking	●
Cleaning	
Acid resistant graphite enamel	●
Self-clean	●
Removable shelf runners	●
Removable oven door	●
Safety	
Glazed door	CoolTouch 4 pane glazed
Door and cavity cooling system	●
Controls	
Electronic clock	●
Automatic cooking/minute timer	●
Power requirements	
Supply voltage	120–240V
Supply frequency	60Hz
AMP draw	12.9A
Accessories	
Oven shelf	●
Step down oven shelf	●
Broil pan + broil rack	●
Glass baking tray	●
Warranty	2 years

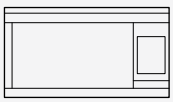

Type of appliance	30" Over the Range Microwave	24" Traditional Microwave	24" Convection Microwave
Model no.	**CMOH-30SS**	**MO-24SS-2**	**CMO-24SS-2**
Finish	**Stainless steel**	**Stainless steel**	**Stainless steel**
Dimensions	H16 1/32" x W29 15/16" D15 9/32"	H13 3/8" x W24" x D19 1/8"	H14 7/8" x W24 5/8" x D19"
Total capacity	1.1 cu.ft	2.0 cu.ft	1.5 cu.ft
Cooking programs			
12 Compu Cook	●		●
Compu Defrost	●	●	●
Sensor Cook Settings	8	13	10
Reheat	●	●	●
Popcorn	●	●	●
Keep Warm		●	
Performance			
Microwave	850W	1200W	900W
Convection element	1400W		1450W
Cleaning			
Sealed easy clean interior	●	●	●
Removable carousel	●	●	●
Controls			
Easy to read display	●	●	●
16 digit display		●	
7 digit display	●		●
2 color display	●	●	●
Power requirements			
Supply voltage	120V	120V	120V
Supply frequency	60Hz	60Hz	60Hz
AMP draw	15A	15A	15A
Accessories			
Baking racks	2		2
Matching trim kit		MOTTK-FP	CMOTTK-FP
Warranty	2 years	2 years	2 years

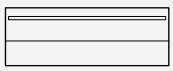

Type of appliance	**30" Warming Drawer**
Model no.	**OD30WDX2**
Finish	**Brushed stainless steel**
Dimensions	H10½" x W29 1/16" x D25 1/16"
Total capacity	1.6 cu.ft
Number of 11" standard size plates	6
Performance	
Proof	90–110°F
Low	140–170°F
Medium	170–200°F
High	200–250°F
Moist & Crisp setting	●
Power output	500W
Power requirements	
Supply voltage	120V
Supply frequency	60Hz
AMP draw	15A
Warranty	2 years

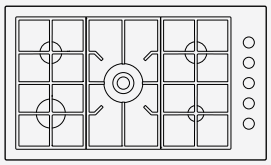

Type of appliance	**36″ 5 Burner Gas Cooktop**
Model no.	**CG365DWNGACX2** **CG365DWLPACX2**
Finish	**Stainless steel**
Dimensions	H3 1/32″ x W35 7/16″ x D20 7/8″
Burners	5 including 1 dual wok burner
Burner ratings (using natural gas)	
Auxiliary burner	700–3,800 BTU
Semi-rapid burner	900–8,500 BTU
Rapid burner	2000–9,500 BTU
Dual Wok burner	600–18,500 BTU
Performance	
Innovalve™ technology	●
Automatic electronic ignition	●
Quick connect gas valve	●
LPG/Natural gas models	●
Cast iron trivets	●
Cleaning	
Easy clean cooktop design	●
Quick component removal	●
Safety	
Auto re-ignition system	●
Spill containment	½ gallon or 19/23 gallon
Controls	
Turned dials	●
Ergonomic control dials	●
Burner indicator lights	●
Laser etched graphics	●
Power requirements	
Supply voltage	110–120V
Supply frequency	60Hz
AMP draw	2A
Accessories	
Wok stand	●
Small pot trivet	●
Warranty	2 years

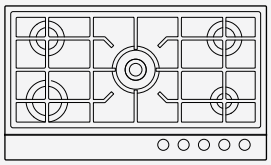

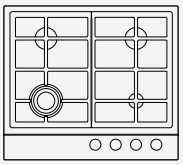

Type of appliance	36″ 5 Burner Gas Cooktop	24″ 4 Burner Gas Cooktop
Model no.	**CG365DNGX1 CG365DLPX1**	**CG244DNGX1 CG244DLPX1**
Finish	**Stainless steel with polished strip**	**Stainless steel with polished strip**
Dimensions	H2 5/16″ x W35 7/16″ x D20 7/8″	H2 5/16″ x W23 5/8″ x D20 7/8″
Burners	5 including 1 dual wok burner	4 including 1 mini wok burner
Burner ratings (using natural gas)		
Auxiliary burner	700–3,500 BTU	700–3,500 BTU
Semi-rapid burner	1,000–8,500 BTU	1,000–8,500 BTU
Rapid burner	1,900–11,500 BTU	
Wok burner		1,900–11,000 BTU
Dual Wok burner	600–19,000 BTU	
Performance		
Innovalve™ technology	●	●
Automatic electronic ignition	●	●
Quick connect gas valve	●	●
LPG/Natural gas models	●	●
Cast iron trivets	●	●
Cleaning		
Easy clean cooktop design	●	●
Quick component removal	●	●
Safety		
Auto re-ignition system	●	●
Spill containment	½ gallon	¼ gallon
Controls		
Turned dials	●	●
Ergonomic control dials	●	●
Laser etched graphics	●	●
Power requirements		
Supply voltage	110–120V	110–120V
Supply frequency	60Hz	60Hz
AMP draw	1A	1A
Accessories		
Wok stand	●	●
Small pot trivet	●	
Warranty	2 years	2 years

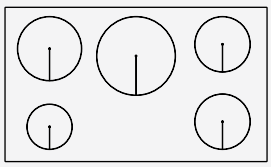

Type of appliance	36" 5 Zone Induction Cooktop
Model no.	**CI365DTB1**
Finish	**Ceramic glass**
Dimensions	H4 1/32" x W35 7/16" x D20 7/8"
Cooking zones	5
Zone ratings	*Maximum power output when set for PowerBoost
Left front	1400W (1800W*)
Right front	1850W (2500W*)
Left rear	2300W (3200W*)
Right rear	1850W (2500W*)
Center	2400W (3700W*)
PowerBoost	3700W
Performance	
Induction cooking technology	●
Heat settings	8
PowerBoost	●
Cleaning	
Flat easy clean glass surface	●
Safety	
Safety time out	●
Pan detection system	●
Surface hot indicators	●
Spillage auto off	●
Controls	
Soft-touch electronic controls	●
PowerBoost indicator	●
Power requirements	
Supply voltage	240V (208V)
Supply frequency	60Hz
AMP draw	48A
Warranty	2 years

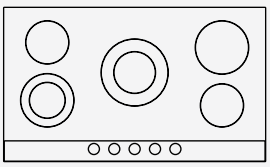

Type of appliance	36" 5 Element Electric Cooktop
Model no.	**CE365DBX1**
Finish	**Ceramic glass Stainless steel trim**
Dimensions	H4 1/4" x W35 7/16" x D20 7/8"
Elements	5 including 2 dual elements
Element ratings	
Left front	1700W/700W
Right front	1200W
Left rear	1200W
Right rear	1800W
Center	2500W/1100W
Performance	
Hi-light high speed ribbon elements	●
Dual element	2
SuperSimmer	20W
Cleaning	
Flat easy clean glass surface	●
Safety	
Temperature limiters	●
Individual hot surface indicators	●
Controls	
Satin chrome control dials	●
Permanent laser etched graphics	●
On indicator	●
Power requirements	
Supply voltage	240V
Supply frequency	60Hz
AMP draw	35A
Warranty	2 years

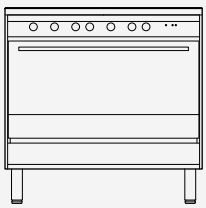

Type of appliance	36" Gas Range
Model no.	**OR36SDBGX2**
Finish	**Stainless steel Black reflective glass**
Dimensions	H35 7/16 – 37 13/32" x W35 1/8" x D23 31/32"
Total capacity	4 cu.ft
Shelf positions	3
Burners	5
Oven functions	4
Bake	●
Convection Bake	●
Broil	●
Defrost	●
Burner ratings (using natural gas)	
Semi-rapid burner	6,000 BTU
Triple ring wok burner	12,000 BTU
Dual burner	2,800 – 16,000 BTU
Performance	
Broil	15,000 BTU
Bake	21,000 BTU
Electronic ignition	●
LPG/Natural gas compatible	●
Cast iron trivets	●
Cleaning	
Acid resistant graphite enamel	●
Removable oven door	●
Removable inner door glass	●
Safety	
Glazed door	Triple glazed
Door and cavity cooling system	●
Non-tip shelves	●
Anti-tilt bracket	●
Flame failure	●
Cooling fan warning light	●
Controls	
Electronic clock	●
Automatic cooking/minute timer	●
Power requirements	
Supply voltage	120V
Supply frequency	60Hz
AMP draw	0.575A
Accessories	
Broiling pan + rack	●
Step down oven shelf	2
Wok stand	●
LPG conversion kit	●
Warranty	2 years

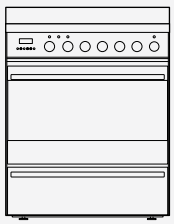

Type of appliance	30" Induction Range
Model no.	**OR30SDPWIX1**
Finish	**Stainless steel Black reflective glass**
Dimensions	H35 21/32 – 36 11/32" x W29 7/8" x D24 7/32"
Total capacity	3.6 cu.ft
Shelf positions	5
Cooktop	4 Induction zones
Oven functions	7 + Self-clean
Bake	●
Convection Bake	●
Fan Bake	●
Broil	●
Convection Broil	●
Defrost	●
Warm	●
Self-clean	●
Zone ratings	
2300W (3700W*)	●
1400W (2500W*)	●
1850W (1800W*)	2
*PowerBoost	Up to 3700W (zone dependent)
Performance	
Broil	2,850W
Bake	2,950W
Convection Bake	2,450W
Warming drawer	500W
Induction cooking technology	●
GentleHeat	●
Auto-heat reduce	●
Open venting	●
Combined warming/storage drawer	●
Lights	2 (Rear)
Cleaning	
Flat easily clean glass surface	●
Acid resistant graphite enamel	●
Self-clean	●
Safety	
Glazed door	CoolTouch triple glazed door
Door and cavity cooling system	●
Non-tip shelves	●
Anti-tilt bracket	●
Pan detection system	●
Hot surface indicator lights	●
Controls	
Turned stainless steel dials	●
Electronic clock	●
Automatic cooking/minute timer	●
Indicator light	●
Power requirements	
Supply voltage	240 – 208/120V
Supply frequency	60Hz
AMP draw	46A (240V) 48.84A (208V)
Accessories	
Broiler pan + rack	●
Step down oven shelf	●
Flat shelf	●
Anti-tilt kit	●
Warranty	2 years

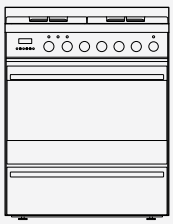

Type of appliance	30" Dual Fuel Range
Model no.	**OR30SDPWGX1**
Finish	**Stainless steel Black reflective glass**
Dimensions	H35 21/32 – 36 11/32" x W29 7/8" x D24 7/32"
Total capacity	3.6 cu.ft
Shelf positions	5
Cooktop	4 Gas burners
Oven functions	7 + Self-clean
Bake	●
Convection Bake	●
Fan Bake	●
Broil	●
Convection Broil	●
Defrost	●
Warm	●
Self-clean	●
Burner ratings (using natural gas)	
Semi-rapid burner	8,000 BTU (2)
Dual wok burner	17,000 BTU (2)
Performance	
Broil	2,850W
Bake	2,950W
Convection Bake	2,450W
Warming drawer	500W
Open venting	●
Electronic ignition	●
LPG/Natural gas compatible	●
Cast iron trivets	●
Combined warming/storage drawer	●
Lights	2 (Rear)
Cleaning	
Acid resistant graphite enamel	●
Removable oven door	●
Self-clean	●
Safety	
Glazed door	CoolTouch triple glazed door
Door and cavity cooling system	●
Non-tip shelves	●
Anti-tilt bracket	●
Flame failure	●
Controls	
Turned stainless steel dials	●
Electronic clock	●
Automatic cooking/minute timer	●
Indicator light	●
Power requirements	
Supply voltage	240 – 208/120V
Supply frequency	60Hz
AMP draw	14.8A (240V) 12.8A (208V)
Accessories	
Broiler pan + rack	●
Step down oven shelf	●
Flat shelf	●
Anti-tilt kit	●
Wok stand	●
Warranty	2 years

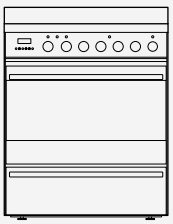

Type of appliance	30" Electric Range
Model no.	**OR30SDPWSX1**
Finish	**Stainless steel Black reflective glass**
Dimensions	H35 21/32 – 36 11/32" x W29 7/8" x D24 7/32"
Total capacity	3.6 cu.ft
Shelf positions	5
Cooktop	4 Ceramic zones
Oven functions	7 + Self-clean
Bake	●
Convection Bake	●
Fan Bake	●
Broil	●
Convection Broil	●
Defrost	●
Warm	●
Self-clean	●
Zone ratings	
1200W	2
2100W	2
Performance	
Broil	2,850W
Bake	2,950W
Convection Bake	2,450W
Warming drawer	500W
Open venting	●
Combined warming/storage drawer	●
Lights	2 (Rear)
Cleaning	
Flat easily clean glass surface	●
Acid resistant graphite enamel	●
Self-clean	●
Safety	
Glazed door	CoolTouch triple glazed door
Door and cavity cooling system	●
Non-tip shelves	●
Anti-tilt bracket	●
Hot surface indicator lights	●
Controls	
Turned stainless steel dials	●
Electronic clock	●
Automatic cooking/minute timer	●
Indicator light	●
Power requirements	
Supply voltage	240 – 208/120V
Supply frequency	60Hz
AMP draw	43.51A (240V) 37.82A (208V)
Accessories	
Broiler pan + rack	●
Step down oven shelf	●
Flat shelf	●
Anti-tilt kit	●
Warranty	2 years

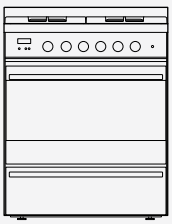

Type of appliance	30" Gas Range
Model no.	**OR30SDBMX1**
Finish	**Stainless steel Black reflective glass**
Dimensions	H35 21/32 – 36 11/32" x W29 7/8" x D24 7/32"
Total capacity	3.6 cu.ft
Shelf positions	5
Cooktop	4 Gas burners
Oven functions	3 + light
Bake	●
Fan Bake	●
Defrost	●
Broil	●
Burner ratings	
Semi-rapid	8,000 BTU (2)
Dual wok burner	17,000 BTU (2)
Performance	
Broil	11,000 BTU
Oven	14,000 BTU
Electronic ignition	●
LPG/Natural gas compatible	●
Storage drawer	●
Lights	2 (Rear)
Cleaning	
Acid resistant graphite enamel	●
Safety	
Glazed door	CoolTouch triple glazed door
Door and cavity cooling system	●
Flame failure	●
Non-tip shelves	●
Anti-tilt bracket	●
Controls	
Turned stainless steel dials	●
Electronic clock	●
Indicator light	●
Power requirements	
Supply voltage	120V
Supply frequency	60Hz
AMP draw	0.92A
Accessories	
Broiler pan + rack	●
Step down oven shelf	●
Flat shelf	●
Anti-tilt kit	●
Wok stand	●
Warranty	2 years

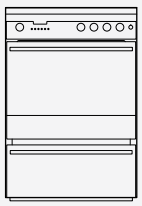

Type of appliance	24" Dual Fuel Range
Model no.	**OR24SDPWGX2**
Finish	**Stainless steel Black reflective glass**
Dimensions	H35 17/32 – 36 7/32" x W23 7/8" x D24 13/16"
Total capacity	2 cu.ft
Shelf positions	4
Burners	4
Oven functions	6 + Self-clean
Bake	●
Fan Forced	●
Broil	●
Fan Broil	●
Ventilated Double Broil	●
Defrost	●
Self-clean	●
Burner ratings	
Auxiliary burner	3,500 BTU
Semi-rapid burner	6,000 BTU
Triple ring wok burner	12,000 BTU
Performance	
Broil	3,000W
Bake	2,800W
Convection Bake	2,200W
Warming drawer	500W
Cleaning	
Acid resistant graphite enamel	●
Removable oven door	●
Self-clean	●
Safety	
Glazed door	CoolTouch 5 pane glass
Door and cavity cooling system	●
Non-tip shelves	●
Anti-tilt bracket	●
Flame failure	●
Controls	
Electronic clock	●
Automatic cooking/minute timer	●
Power requirements	
Supply voltage	120 – 240V
Supply frequency	60Hz
AMP draw	15.2A
Accessories	
Broiling pan + rack	●
Oven shelf	2
Wok stand	●
Warming drawer shelf	●
Warranty	2 years

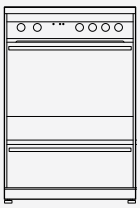

Type of appliance	**24" Gas Range**
Model no.	**OR24SDMBGX2**
Finish	**Stainless steel** **Black reflective glass**
Dimensions	H35 17/32–36 7/32" x W23 7/8" x D24 3/32"
Total capacity	2.5 cu.ft
Shelf positions	3
Burners	4
Oven functions	4
Bake	●
Convection Bake	●
Broil	●
Defrost	●
Burner ratings (using natural gas)	
Auxiliary burner	3,500 BTU
Semi-rapid burner	6,000 BTU
Triple ring wok burner	12,000 BTU
Performance	
Broil	8,500 BTU
Bake	13,000 BTU
Electronic ignition	●
LPG/Natural gas compatible	●
Cast iron trivets	●
Cleaning	
Acid resistant graphite enamel	●
Removable oven door	●
Removable inner door glass	●
Safety	
Glazed door	Triple glazed
Door and cavity cooling system	●
Non-tip shelves	●
Anti-tilt bracket	●
Flame failure	●
Cooling fan warning light	●
Controls	
Electronic clock	●
Automatic cooking/minute timer	●
Power requirements	
Supply voltage	120V
Supply frequency	60Hz
AMP draw	0.1A
Accessories	
Broiling pan + rack	●
Oven shelf	2
Wok stand	●
LPG conversion kit	●
Warranty	2 years

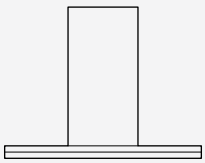

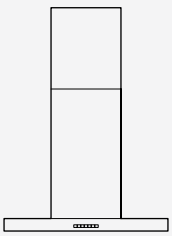

Type of appliance	36″ Ventilation	30″ Ventilation
Model no.	**HC36DTXB1**	**HC30DTX1**
Finish	**Stainless steel Black glass**	**Stainless steel Black glass**
Dimensions	H25 – 40 ¾″ x W35 7/16″ x D19 11/16″	H23 ⅜″ – 40 ¼″ x W29 17/32″ x D19 11/16″
Fan ratings		
Max air movement	615 CFM	615 CFM
Decibel rating	48dBA – 67dBA	48dBA – 67dBA
Performance		
Centrifugal fan	●	●
Fan speeds	4	4
Cleaning		
Dishwasher safe aluminium mesh filters	●	●
Easy-clean interior plate	●	●
Installation		
Two piece adjustable flue with optional extensions	●	●
Ducted or recirculating options	●	●
Controls		
Soft-touch buttons	●	●
Timer function	●	●
Angled halogen lights	2 x 50W	2 x 50W
Power requirements		
Supply voltage	110 – 120V	110 – 120V
Supply frequency	60Hz	60Hz
AMP draw	10A	10A
Optional accessories		
Recirculating kit	●	●
Charcoal filter	●	●
Warranty	2 years	2 years

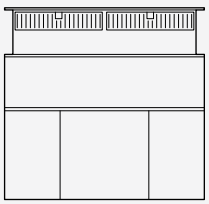

Type of appliance	**36" Downdraft**
Model no.	**DD-36SS**
Finish	**Stainless steel**
Dimensions	H8¼" x W36" x D1½"
Fan ratings	
Max air movement	600 CFM
Performance	
Fan speeds	Variable speeds
Cleaning	
Dishwasher safe aluminium mesh filters	●
Easy-clean	●
Controls	
Simple one touch operation	●
Power requirements	
Supply voltage	120V
Supply frequency	60Hz
AMP draw	15A
Warranty	2 years

OB24 Built-in Oven and OR30 & OR24 Dual Fuel Range

Oven Light

Remains lit while the oven is in use, but can also be used independently from the other cooking functions.

Bake

Heat is provided from the upper and lower elements. A traditional cooking mode, suitable for single shelf cooking of items like cakes, delicate items like sponges, custard tart and crème brûlée.

Fan Bake (OR30 Electric oven models only)

The oven fan circulates hot air from upper and lower elements and distributes it around the cavity. Food browns more quickly, great for crisping pastry. Suitable for robust items like cookies, scones and muffins.

Broil

The broil element delivers heat for fast, healthy grilling. Perfect for tender meat cuts, toasting and crisping.

Ventilated Broil/Convection Broil/Fan Broil

The oven fan circulates hot air from the top element for high speed broiling and produces food with a finish that is similar to a rotisserie. Food is crisp and brown on the outside while the inside remains moist and tender.

Ventilated Cooking with Double Broil (OB24 & OR24 Duel Fuel only)

The oven fan circulates hot air from the top element for high speed double broiling and produces food with a finish that is similar to a rotisserie. Food is crisp and brown on the outside while the inside remains moist and tender.

Convection Bake

A very flexible method of cooking. A concealed element surrounding the fan at the rear of the oven heats air which is then distributed evenly around the cavity. This is the ideal mode for multi-shelf cooking and complete oven meals.

Defrost

The oven fan circulates air around the oven, speeding up the defrosting process by up to 30%.

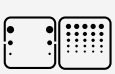

Self-clean

During the self-clean cycle, the oven reaches higher temperatures than it does for cooking, breaking down soil and grease deposits which can be wiped away with a damp cloth.

OR24, OR30 and OR36 Gas Range

Bake

The heat is produced by the oven burner, A traditional cooking mode, suitable for single shelf cooking of items like cakes, delicate items like sponges, custard tart and crème brûlée.

Convection Bake

A very flexible method of cooking. The heat produced by the oven burner is distributed throughout the oven cavity by the fan. This is the ideal mode for multi-shelf cooking and complete oven meals.

Defrost

The oven fan circulates air around the oven, speeding up the defrosting process by up to 30%.

Broil

The broil element delivers heat for fast, healthy grilling. Perfect for tender meat cuts, toasting and crisping.

OB30 Built-in Oven models

Aero™ Pastry

Heat from the lower concealed element is circulated throughout the oven cavity by the Aero™ fan. Excellent for sweet and savory pastry foods, for moist breads and brownies and biscuits that you want extra chewy.

Roast

A two step program that has been developed to help you cook delicious roasts effortlessly. This function is a combination of grill and bake, grilling your food for the first 20 minutes then bakes at the set temperature for the rest of your cooking time. This sears the meat to keep in the juices.

Bake

The oven fan circulates hot air from the top outer and lower concealed elements and distributes it around the oven cavity. Aero™ Bake is great for crisping pastry in lemon meringue pie and vegetable filo parcels.

Aero™ Bake

The oven fan circulates hot air from the top outer and lower concealed elements and distributes it around the oven cavity. Aero™ Bake is great for crisping pastry in lemon meringue pie and vegetable filo parcels.

Pastry Bake

Uses the heat from the lower element only, this is a traditional cooking mode which is suitable for recipes that were developed in older ovens. For best results, cook on only one shelf at a time. Perfect for foods that require delicate cooking and have a pastry base, like custard tarts, quiches and cheesecake or anything that does not require direct heat and browning on the top surface.

Maxi Broil

Delivers intense heat from the entire top element. It is the most suitable mode for 'finishing off' many meals, for example browning the top of potato gratin and frittata as well as cooking smaller cuts of meat. Use Maxi Grill to toast bread or grill your favorite chicken, fish and steak.

Aero™ Broil

Produces food with a finish that is similar to a rotisserie. Meat, poultry and vegetables cook beautifully; food is crisp and brown on the outside while the inside remains moist and tender.

Broil

Delivers intense heat from the inner region of the top element. Great when you need to quickly grill smaller dishes, for example crème brûlée or one to two portions of your usual favorites, like crispy chicken breasts or a steak.

TrueAero™

A concealed heating element surrounding the fan in the rear of the oven heats air which is then blown into the cavity. The consistent temperature creates an ideal oven environment producing goods which are well risen and evenly colored.

Warm

A constant low heat of 165°F (75°C). It is excellent for keeping cooked food hot and warming plates and serving dishes.

Self-clean

During the self-clean cycle, the oven reaches higher temperatures than it does for cooking, breaking down soil and grease deposits which can be wiped away with a cloth afterwards.

Note: Use all oven functions with the oven door closed.

30″ Double Built-in Oven

Model no:
OB30DDEPX2

Dimensions	inches
Ⓐ Overall height of product	48½″
Ⓑ Overall width of product	29 29/32″
Ⓒ Depth of product front and control panel (excl. handle and dials)	1 17/32″
Ⓓ Depth of product chassis	22 13/32″

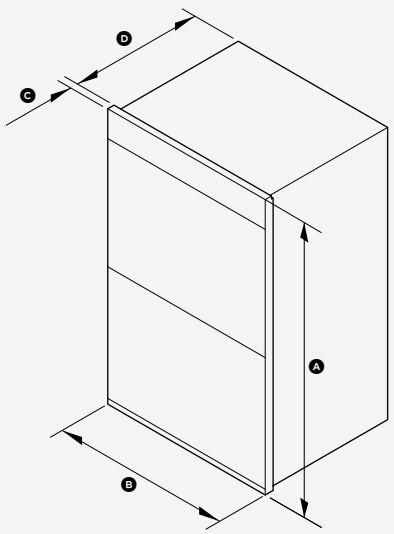

30″ Single Built-in Oven

Model no:
OB30SDEPX2

Dimensions	inches
Ⓐ Overall height of product	27⅛″
Ⓑ Overall width of product	29 29/32″
Ⓒ Depth of product front and control panel (excl. handle and dials)	1 17/32″
Ⓓ Depth of product chassis	22 13/32″

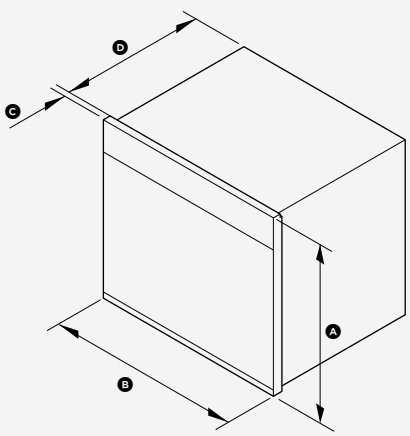

24″ Single Built-in Oven

Model no:
OB24SDPX4

Dimensions	inches
Ⓐ Overall height of product	24″
Ⓑ Overall width of product	24″
Ⓒ Depth of product front and control panel (excl. handle and dials)	⅞″
Ⓓ Depth of product chassis	22 1/32″

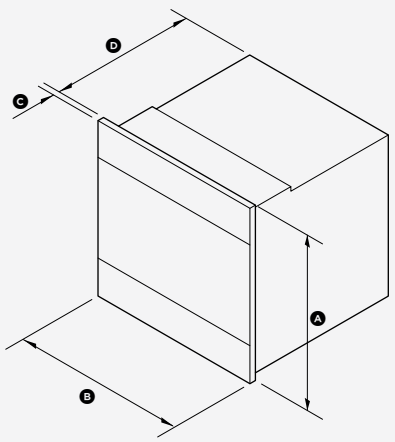

30″ Over the Range Microwave

Model no:
CMOH-30SS

Dimensions	inches
Ⓐ Overall height of product	16 11/32″
Ⓑ Overall width of product	29 15/16″
Ⓒ Overall depth of product	15 9/32″

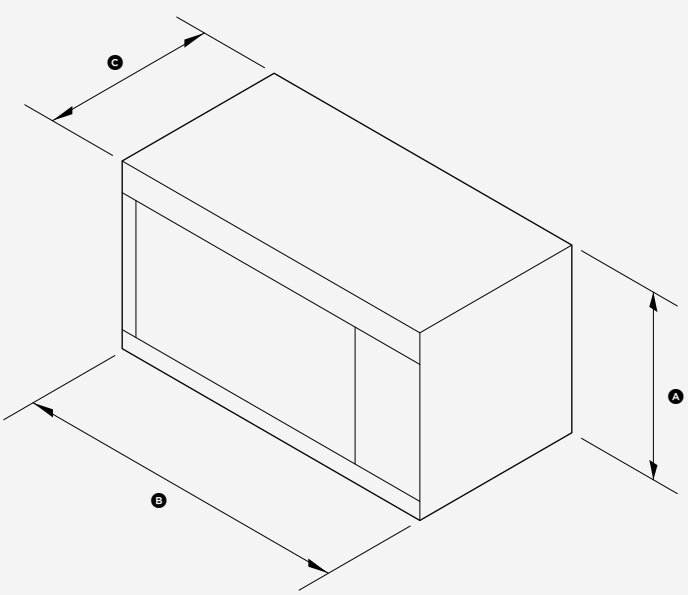

24" Traditional Microwave

Model no:
MO-24SS-2

Dimensions	inches
Ⓐ Overall height of product	13 3/8"
Ⓑ Overall width of product	24"
Ⓒ Overall depth of product	19 1/8"

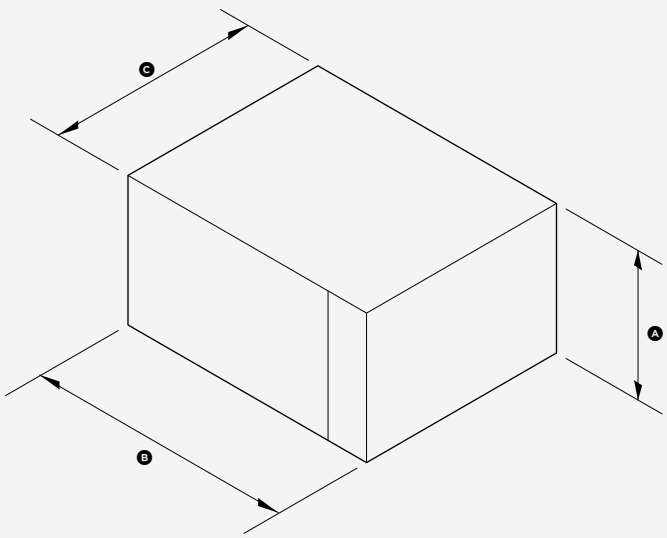

24" Convection Microwave

Model no:
CMO-24SS-2

Dimensions	inches
Ⓐ Overall height of product	14 7/8"
Ⓑ Overall width of product	24 5/8"
Ⓒ Overall depth of product	19"

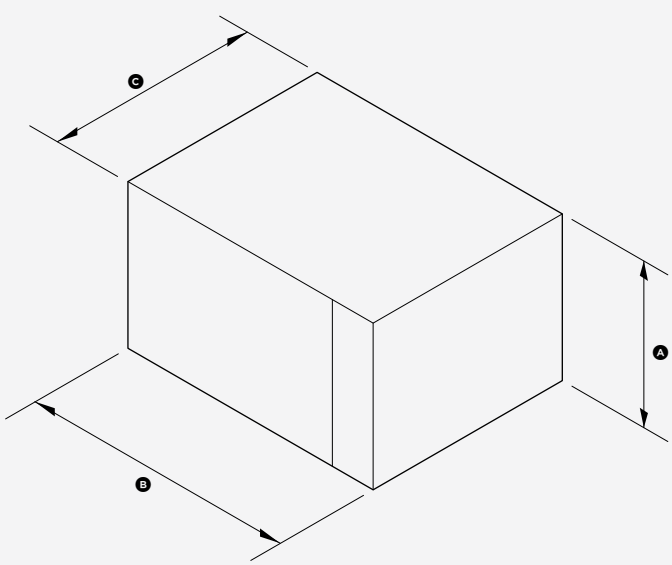

30″ Warming Drawer

Model no:
OD30WDX2

Dimensions	inches
Ⓐ Overall height of product	10½″
Ⓑ Overall width of product	29 11/16″
Ⓒ Depth of product front (excl. handle)	1½″
Ⓓ Depth of product chassis	23½″

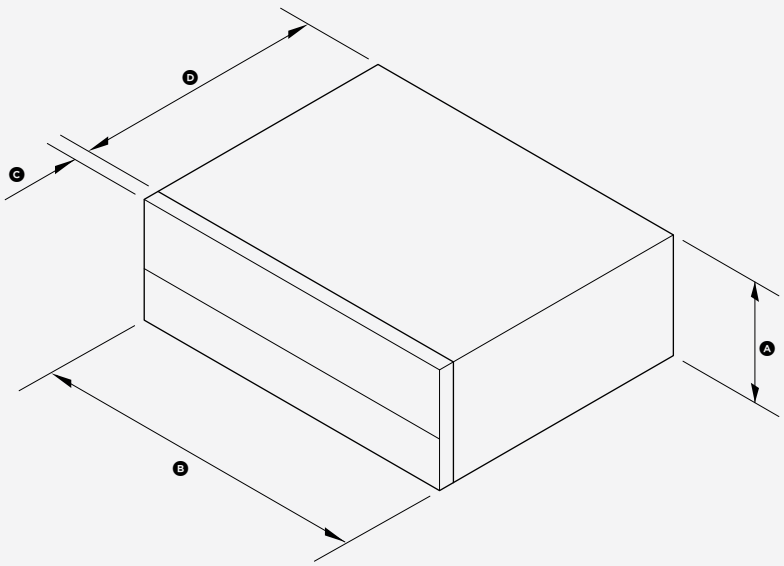

Flush Gas on Steel Cooktop

Model no:
CG365DWNGACX2,
CG365DWLPACX2

Dimensions	inches
Ⓐ Height of chassis (below top of counter)	3 1/32″
Ⓑ Overall width of product	35 7/16″
Ⓒ Overall depth of product	20 7/8″

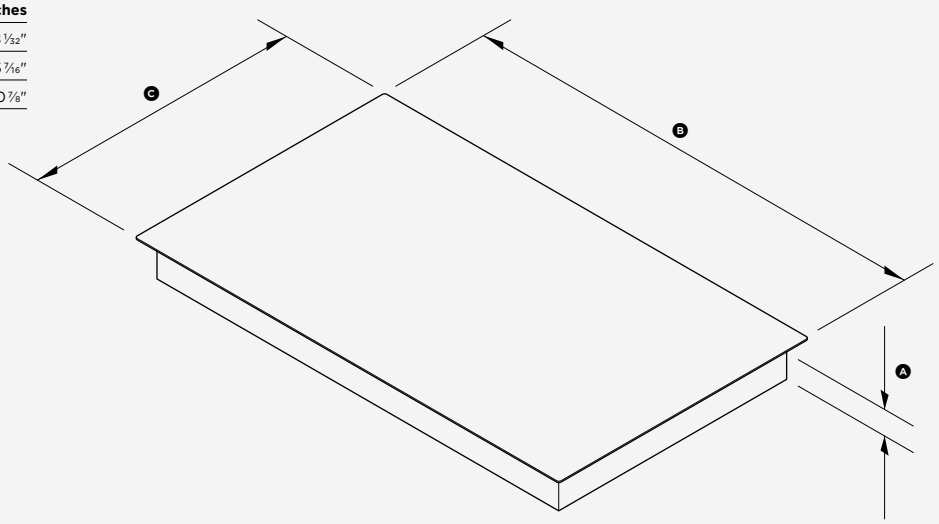

36″ 5 Burner Gas Cooktop

Model no:
CG365DNGX1,
CG365DLPX1

Dimensions	inches
Ⓐ Overall height of chassis (below top of counter)	2 5/16″
Ⓑ Overall width of product	35 7/16″
Ⓒ Overall depth of product	20 7/8″

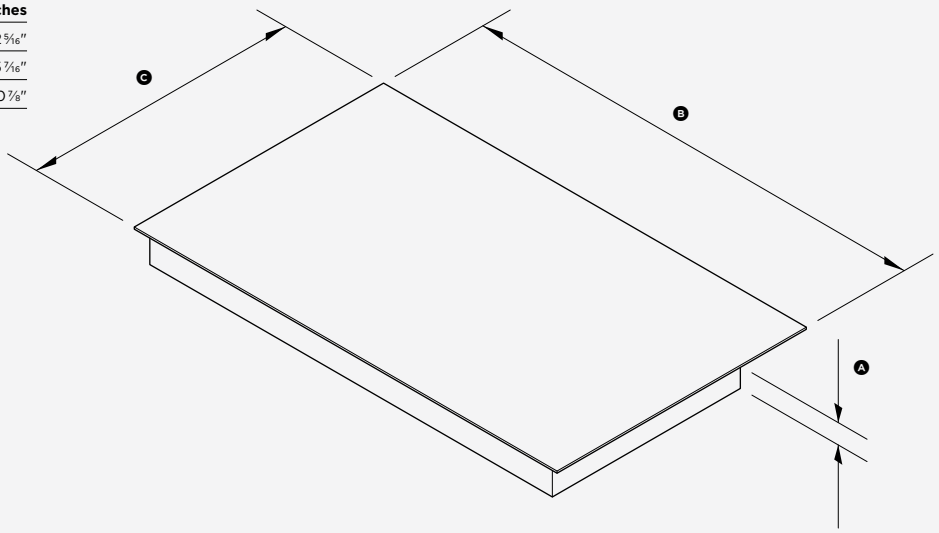

24″ 4 Burner Gas Cooktop

Model no:
CG244DNGX1,
CG244DLPX1

Dimensions	inches
Ⓐ Overall height of chassis (below top of counter)	2 5/16″
Ⓑ Overall width of product	23 5/8″
Ⓒ Overall depth of product	20 7/8″

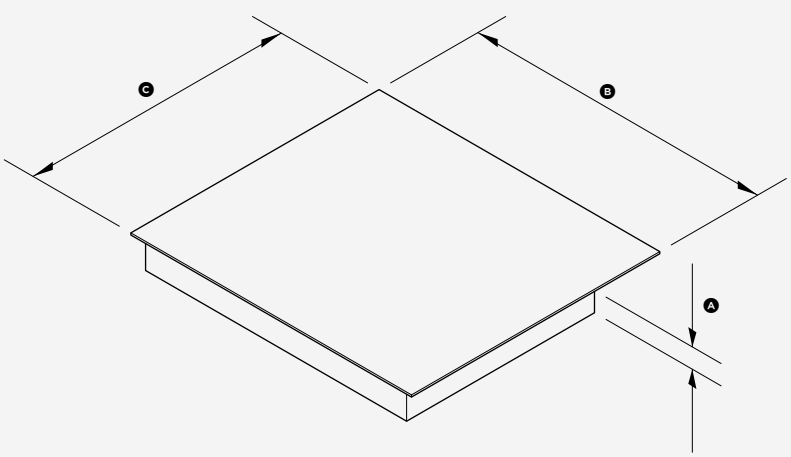

36″ 5 Zone Induction Cooktop

Model no:
CI365DTB1

Dimensions	inches
Ⓐ Height of chassis incl. conduit junction (below top of counter)	4 11/32″
Ⓑ Overall width of product	35 7/16″
Ⓒ Overall depth of product	20 7/8″

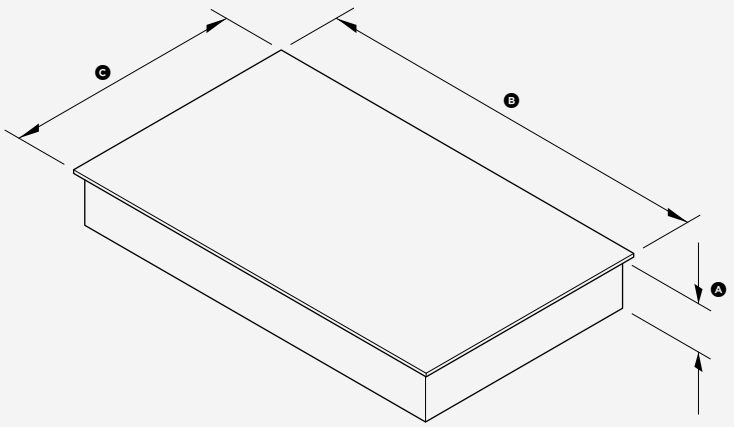

36″ 5 Element Electric Cooktop

Model no:
CE365DBX1

Dimensions	inches
Ⓐ Height of chassis incl. conduit junction (below top of counter)	4 1/4″
Ⓑ Overall width of product	35 7/16″
Ⓒ Overall depth of product	20 7/8″

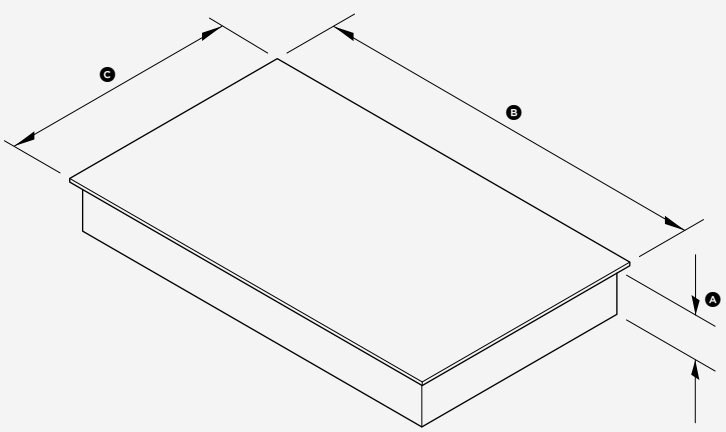

36″ Gas Range

Model no:
OR36SDBGX2

Dimensions	inches
Ⓐ Overall height of product (to top of cooktop, excl. pan supports)	min. 35 7/16″ – max. 37 13/32″
Ⓑ Overall width of product	35 1/8″
Ⓒ Overall depth of product (excl. handle and dials)	23 31/32″
Ⓓ Backguard height Island trim available	8″ 3″

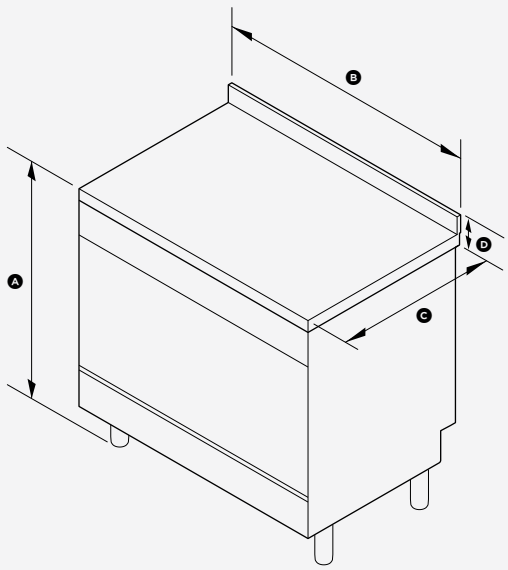

30″ Multifunction Range Cooker

Model no:
OR30SDPWIX1, OR30SDPWGX1,
OR30SDPWSX1, OR30SDBWX1

Dimensions	inches
Ⓐ Overall height of product (to top of cooktop, excl. pan supports)	min. 35 21/32″ – max. 36 11/32″
Ⓑ Overall width of product	29 7/8″
Ⓒ Overall depth of product (excl. handle and dials, incl. splashback)	24 7/32″

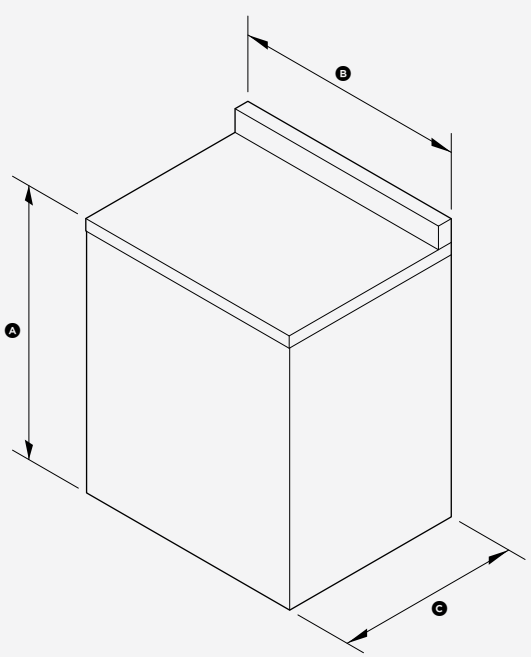

24″ Dual Fuel Range

Model no:
OR24SDPWGX2

Dimensions	inches
Ⓐ Overall height of product (to top of cooktop, excl. pan supports)	min. 35 17/32″ – max. 36 7/32″
Ⓑ Overall width of product	23 7/8″
Ⓒ Overall depth of product (excl. handle and dials)	24 13/16″
Ⓓ Backguard height	4 7/16″

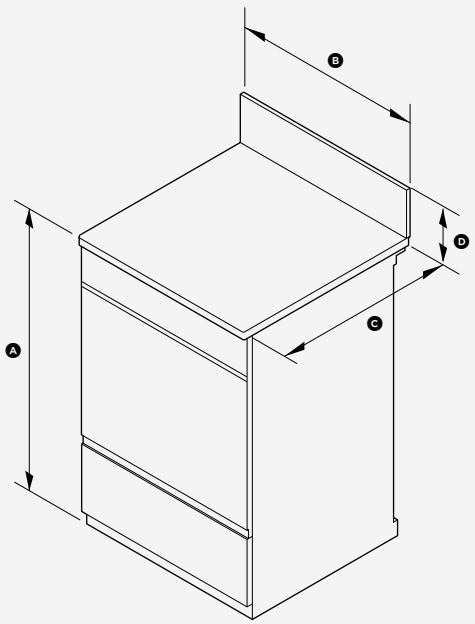

24″ Gas Range

Model no:
OR24SDMBGX2

Dimensions	inches
Ⓐ Overall height of product (to top of cooktop, excl. pan supports)	min. 35 7/16″ – max. 36 7/32″
Ⓑ Overall width of product	23 7/8″
Ⓒ Overall depth of product (excl. handle and dials)	24 3/32″
Ⓓ Backguard height	4 7/16″

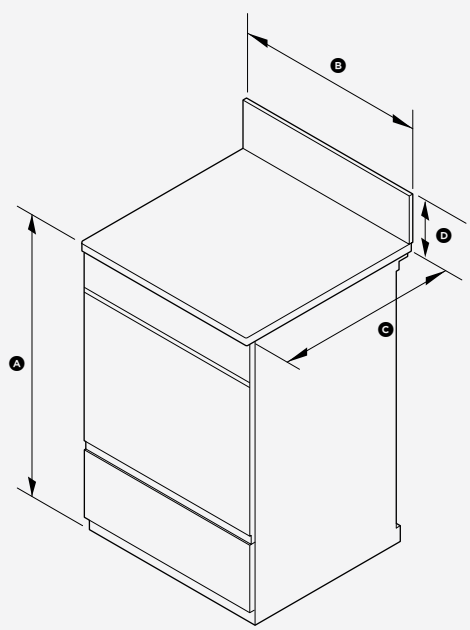

36″ Ventilation

Model no:
HC36DTXB1

Dimensions	inches
Ⓐ Overall height of product	min. 25″ – max. 40 ¾″
Ⓑ Overall width of product	35 7/16″
Ⓒ Overall depth of product	19 11/16″

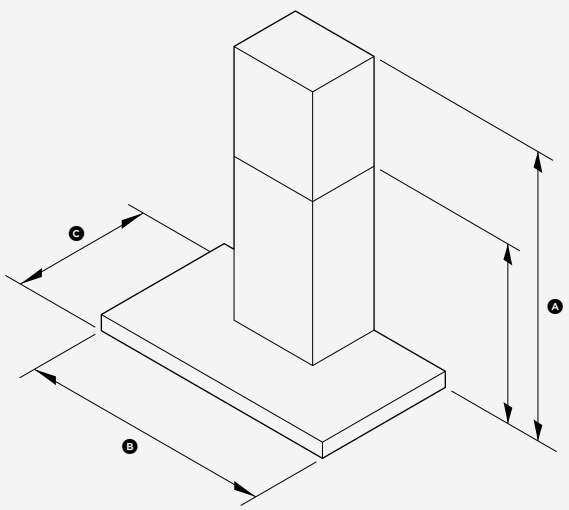

30″ Ventilation

Model no:
HC30DTX1

Dimensions	inches
Ⓐ Overall height of product	min. 23 3/8″ – max. 40 1/4″
Ⓑ Overall width of product	29 17/32″
Ⓒ Overall depth of product	19 11/16″

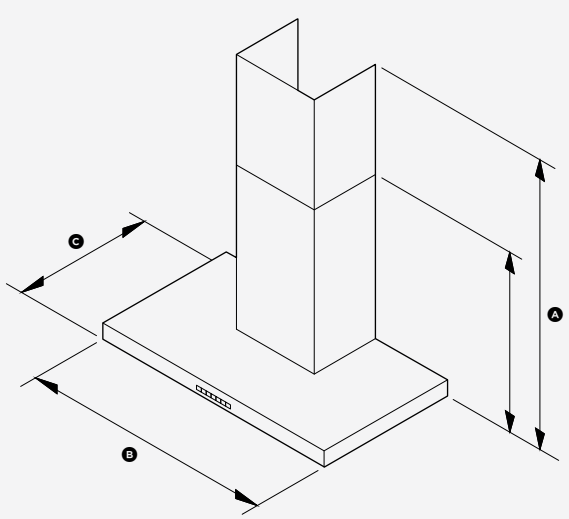

36″ Downdraft

Model no:
DD-36SS

Dimensions	inches
Ⓐ Height of vent from top of counter (in raised position)	8¼″
Ⓑ Overall width of product	36″
Ⓒ Depth of vent	1½″
Ⓓ Height of vent when retracted (including chassis)	26⅛″
Ⓔ Width of blower housing	16″
Ⓕ Depth of blower housing	9⅜″

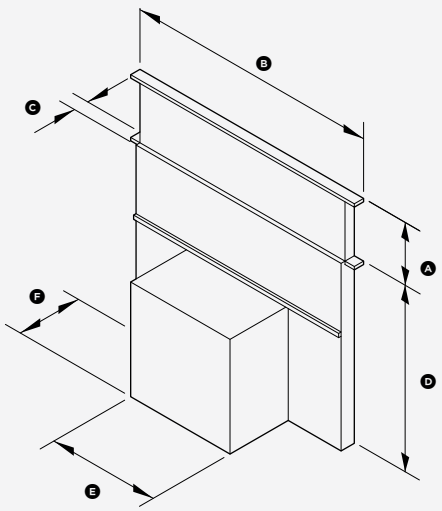

COOL

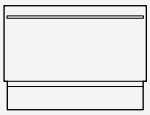

Type of appliance	**36" CoolDrawer™**
Model no.	**RB36S25MKIW1**
Finish	
Integrated	●
EZKleen stainless steel façade	Part number 840545
Dimensions	H25 3/16" x W33 21/32" x D21 15/16"
Capacity	
Total gross volume	3.1 cu.ft
ENERGY STAR certified	In freezer mode
Energy usage (kWh per year)	150 as refrigerator, 300 as freezer
Modes	
Chill (31°F)	●
Pantry (54°F)	●
Wine (45–59°F)	●
Refrigerator (37°F)	●
Freezer (0°F)	●
Features	
Touch control glass interface	●
Key lock	●
Variable temperature control	●
Fruit and vegetable drawer & pullout tray	●
Customizable storage container	●
Drawer alarm	●
Warranty	
Parts & labor	2 years
Additional sealed system parts	3 years

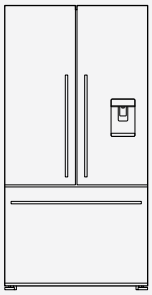

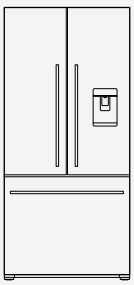

Type of appliance	French Door Refrigerator	French Door Ice & Water Refrigerator
Model no.	**RF201ADUSX5**	**RF170ADUSX4**
Finish	**EZKleen stainless steel flat door Concealed hinge Counter depth**	**EZKleen stainless steel flat door Concealed hinge Counter depth**
Dimensions (excluding handles)	H70 15/32″ x W35 7/16″ x D27 3/8″	H67 17/32″ x W31 3/32″ x D27 3/8″
Capacity		
Refrigerator	14.6 cu.ft	12.1 cu.ft
Freezer	5.5 cu.ft	4.8 cu.ft
Total	20.1 cu.ft	16.9 cu.ft
ENERGY STAR Most Efficient 2015	●	
Energy usage (kWh per year)	532	585
Performance		
ActiveSmart™ technology	●	●
Frost free freezer	●	●
Adaptive defrost	●	●
Humidity control system	●	●
Sabbath mode	●	●
Refrigerator		
Ultra slim water dispenser	●	●
Soft-close doors	●	●
SmartTouch control panel	●	●
Door alarm	●	●
Adjustable glass shelves	3	3
Fruit and vegetable bins	2	2
Stackable bottle holders	4	4
Adjustable door shelves	6	6
Covered door shelves	2	2
LED light	●	●
Deli storage bins	2	
Freezer		
Built-in ice maker	●	●
Ice Boost	●	●
Fast freeze	●	●
Bottle chill	●	●
Large plastic bin	2	●
Small plastic bins	●	●
Ice bin and scoop	●	●
LED light	●	
Door alarm	●	●
Accessories		
Water filter	Part number 836848	Part number 836848
Stainless steel surround kit	Part number 23989	Part number 23990
Warranty		
Parts & labor	2 years	2 years
Additional sealed system parts	3 years	3 years

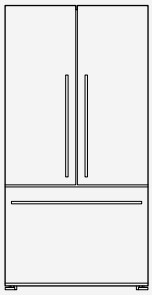

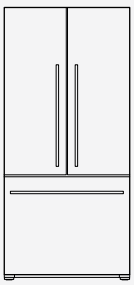

Type of appliance	French Door Refrigerator	French Door Refrigerator
Model no.	**RF201ADX5**	**RF170ADX4**
Finish	**EZKleen stainless steel flat door Concealed hinge Counter depth**	**EZKleen stainless steel flat door Concealed hinge Counter depth**
Dimensions (excluding handles)	H70 15⁄32″ x W35 7⁄16″ x D27 3⁄8″	H67 17⁄32″ x W31 3⁄32″ x D27 3⁄8″
Capacity		
Refrigerator	14.6 cu.ft	12.1 cu.ft
Freezer	5.5 cu.ft	4.8 cu.ft
Total	20.1 cu.ft	16.9 cu.ft
ENERGY STAR Most Efficient 2015	●	
Energy usage (kWh per year)	448	501
Performance		
ActiveSmart™ technology	●	●
Frost free freezer	●	●
Adaptive defrost	●	●
Humidity control system	●	●
Sabbath mode	●	●
Refrigerator		
SmartTouch control panel	●	●
Door alarm	●	●
Adjustable glass shelves	3	3
Fruit and vegetable bins	2	2
Stackable bottle holders	4	4
Adjustable door shelves	6	6
Covered door shelves	2	2
LED light	●	●
Deli storage bins	2	
Freezer		
Fast freeze	●	●
Bottle chill	●	●
Large plastic bin	2	●
Small plastic bins	●	2
Ice tray	●	●
LED light	●	
Door alarm	●	●
Accessories		
Stainless steel surround kit	Part number 23989	Part number 23990
Warranty		
Parts & labor	2 years	2 years
Additional sealed system parts	3 years	3 years

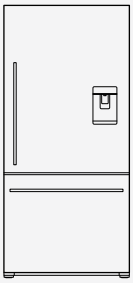

Type of appliance	**Ice & Water Bottom Freezer Refrigerator**
Model no.	**RF170WDRUX5**
	RF170WDLUX5
Finish	**EZKleen stainless steel flat door** **Concealed hinge** **Counter depth**
Dimensions (excluding handles)	H67 17/32" x W31 3/32" x D27 3/8"
Capacity	
Refrigerator	12.3 cu.ft
Freezer	4.8 cu.ft
Total	17.1 cu.ft
ENERGY STAR certified	●
Energy usage (kWh per year)	535
Performance	
ActiveSmart™ technology	●
Frost free freezer	●
Adaptive defrost	●
Humidity control system	●
Sabbath mode	●
Refrigerator	
Ultra slim water dispenser	●
SmartTouch control panel	●
Door alarm	●
Adjustable glass shelves	4
Fruit & vegetable bins	2
Stackable bottle holders	2
Adjustable door shelves	4
Covered door shelves	2
LED light	●
Freezer	
Built-in ice maker	●
Ice Boost	●
Fast freeze	●
Bottle chill	●
Large plastic bin	●
Small plastic bins	2
Ice bin and scoop	●
Door alarm	●
Accessories	
Water filter	Part number 836848
Stainless steel surround kit (L-hand hinge)	Part number 23986
(R-hand hinge)	Part number 23987
Pigeon pair (two appliances joined)	Part number 23988
Joiner kit	Part number 819264
Warranty	
Parts & labor	2 years
Additional sealed system parts	3 years

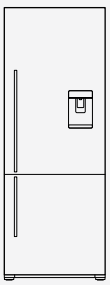

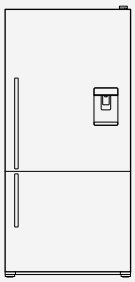

Type of appliance	Ice & Water Bottom Freezer Refrigerator	Ice & Water Bottom Freezer Refrigerator
Model no.	**RF135BDRUX4**	**E522BRXU5**
	RF135BDLUX4	**E522BLXU5**
Finish	**EZKleen stainless steel flat door Concealed hinge Counter depth**	**EZKleen stainless steel curved door Curved handle Counter depth**
Dimensions (excluding handles)	H67 17/32" x W25" x D27 3/8"	H67 1/8" x W31 3/32" x D28 5/32"
Capacity		
Refrigerator	9.6 cu.ft	12.4 cu.ft
Freezer	3.8 cu.ft	5.2 cu.ft
Total	13.4 cu.ft	17.6 cu.ft
ENERGY STAR certified		●
Energy usage (kWh per year)	545	538
Performance		
ActiveSmart™ technology	●	●
Frost free freezer	●	●
Adaptive defrost	●	●
Humidity control system	●	●
Sabbath mode	●	●
Refrigerator		
Ultra slim water dispenser	●	●
SmartTouch control panel	●	●
Door alarm	●	●
Adjustable glass shelves	2	4
Fruit & vegetable bins	2	2
Stackable bottle holders	2	2
Adjustable door shelves	2	4
Covered door shelves	2	2
Egg trays		2
LED light	●	●
Freezer		
Built-in ice maker	●	●
Ice Boost	●	●
Fast freeze	●	●
Bottle chill	●	●
Large plastic bin	●	●
Small plastic bins	2	2
Ice bin and scoop	●	●
Centre roll out tray	●	●
Door alarm	●	●
Accessories		
Water filter	Part number 836848	Part number 836848
Stainless steel surround kit (L-hand hinge)	Part number 23980	
(R-hand hinge)	Part number 23981	
Pigeon pair (two appliances joined)	Part number 23982	
Joiner kit	Part number 819264	Part number 819264
Warranty		
Parts & labor	2 years	2 years
Additional sealed system parts	3 years	3 years

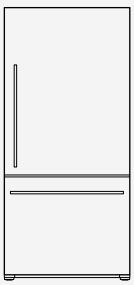

Type of appliance	Bottom Freezer Refrigerator
Model no.	**RF170WDRX5** **RF170WDLX5**
Finish	**EZKleen stainless steel flat door** **Concealed hinge** **Counter depth**
Dimensions (excluding handles)	H67 17/32" x W31 3/32" x D27 3/8"
Capacity	
Refrigerator	12.3 cu.ft
Freezer	4.8 cu.ft
Total	17.1 cu.ft
ENERGY STAR certified	●
Energy usage (kWh per year)	452
Performance	
ActiveSmart™ technology	●
Frost free freezer	●
Adaptive defrost	●
Humidity control system	●
Sabbath mode	●
Refrigerator	
SmartTouch control panel	●
Door alarm	●
Adjustable glass shelves	4
Fruit & vegetable bins	2
Stackable bottle holders	2
Adjustable door shelves	4
Covered door shelves	2
LED light	●
Freezer	
Fast freeze	●
Bottle chill	●
Large plastic bin	●
Small plastic bins	2
Ice tray	●
Door alarm	●
Accessories	
Stainless steel surround kit (L-hand hinge)	Part number 23986
(R-hand hinge)	Part number 23987
Pigeon pair (two appliances joined)	Part number 23988
Joiner kit	Part number 819264
Warranty	
Parts & labor	2 years
Additional sealed system parts	3 years

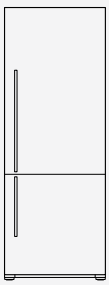

Type of appliance	Bottom Freezer
Model no.	**RF135BDRX4** **RF135BDLX4**
Finish	**EZKleen stainless steel flat door** **Concealed hinge** **Counter depth**
Dimensions (excluding handles)	H67 17/32" x W25" x D27 3/8"
Capacity	
Refrigerator	9.6 cu.ft
Freezer	3.8 cu.ft
Total	13.4 cu.ft
Energy usage (kWh per year)	461
Performance	
ActiveSmart™ technology	●
Frost free freezer	●
Adaptive defrost	●
Humidity control system	●
Sabbath mode	●
Refrigerator	
SmartTouch control panel	●
Door alarm	●
Adjustable glass shelves	4
Fruit and vegetable bins	2
Stackable bottle holders	2
Adjustable door shelves	4
Covered door shelves	2
Egg trays	2
LED light	●
Freezer	
Fast freeze	●
Bottle chill	●
Large plastic bin	●
Small plastic bins	2
Ice tray	2
Centre roll out tray	●
Door alarm	●
Accessories	
Stainless steel surround kit (L-hand hinge)	Part number 23980
(R-hand hinge)	Part number 23981
Pigeon pair (two appliances joined)	Part number 23982
Joiner kit	Part number 819264
Warranty	
Parts & labor	2 years
Additional sealed system parts	3 years

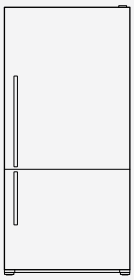

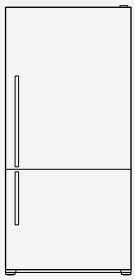

Type of appliance	Bottom Freezer Refrigerator	Bottom Freezer Refrigerator
Model no.	**E522BRX5** **E522BLX5**	**E522BRE5** **E522BLE5**
Finish	**EZKleen stainless steel curved door** **Curved handle** **Counter depth**	**White curved door** **Curved handle** **Counter depth**
Dimensions (excluding handles)	H66 15⁄16″ x W31 3⁄32″ x D28 5⁄32″	H66 15⁄16″ x W31 3⁄32″ x D28 5⁄32″
Capacity		
Refrigerator	12.4 cu.ft	12.4 cu.ft
Freezer	5.2 cu.ft	5.2 cu.ft
Total	17.6 cu.ft	17.6 cu.ft
ENERGY STAR certified	●	●
Energy usage (kWh per year)	454	454
Performance		
ActiveSmart™ technology	●	●
Frost free freezer	●	●
Adaptive defrost	●	●
Humidity control system	●	●
Sabbath mode	●	●
Refrigerator		
SmartTouch control panel	●	●
Door alarm	●	●
Adjustable glass shelves	4	4
Fruit & vegetable bins	2	2
Stackable bottle holders	2	2
Adjustable door shelves	4	4
Covered door shelves	2	2
Egg trays	2	2
LED light	●	●
Freezer		
Fast freeze	●	●
Bottle chill	●	●
Large plastic bin	●	●
Small plastic bins	2	2
Ice trays	2	2
Centre roll out tray	●	●
Door alarm	●	●
Accessories		
Stainless steel surround kit (L-hand hinge)	Part number 23986	Part number 23986
(R-hand hinge)	Part number 23987	Part number 23987
Pigeon pair (two appliances joined)	Part number 23988	Part number 23988
Joiner kit	Part number 819264	Part number 819264
Warranty		
Parts & labor	2 years	2 years
Additional sealed system parts	3 years	3 years

36″ CoolDrawer™

Model no:
RB36S25MKIW1

Dimensions	inches
Ⓐ Overall height of product	25 3/16″
Ⓑ Overall width of product	33 21/32″
Ⓒ Overall depth of product	21 15/16″
Ⓓ Height of product front	18 3/4″*
Ⓔ Width of product front	35 3/4″*
Ⓕ Depth of product front (excludes handle)	1 1/16″*

*Optional EZKleen Stainless Steel drawer panel; alternatively door and false panel to be manufactured and fitted by cabinetmaker.

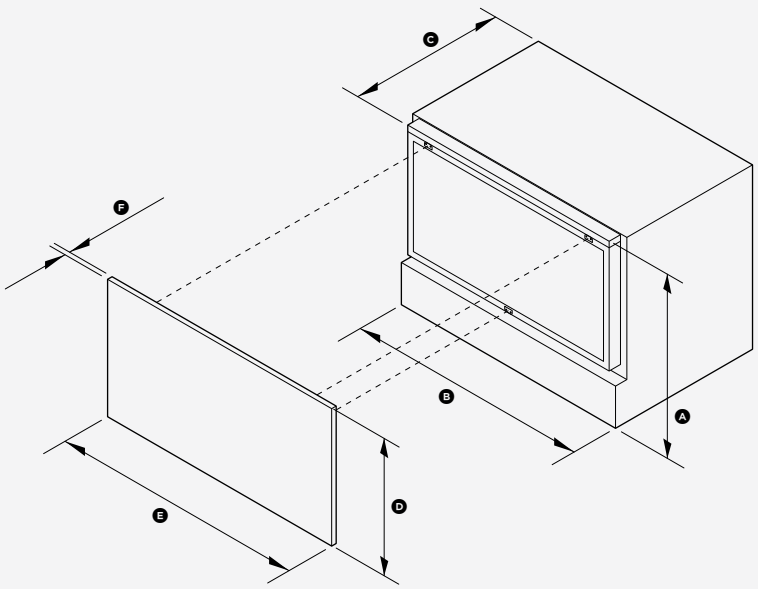

20.1 cu.ft French Door Refrigerator (Flat door)

Model no:
RF201ADUSX5 (Ice & Water),
RF201ADX5

Dimensions	inches
Ⓐ Overall height of product	70 15/32″
Ⓑ Overall width of product	35 7/16″
Ⓒ Overall depth of product (excl. handles, incl. evaporator)	27 3/8″
Cabinetry dimensions	
Ⓓ Inside height of cavity	71 1/4″
Flush with refrigerator chassis – full door rotation	
Ⓔ Inside width	46 1/16″
Ⓕ Inside depth	27 3/8″
Flush with refrigerator door – full door rotation	
Ⓖ Inside width	44 9/32″
Ⓗ Inside depth flush to flat door	27 3/8″
Flush with refrigerator door – 90° rotation	
Ⓘ Inside width	45 5/8″
Ⓙ Inside depth flush to flat door	27 3/8″
Minimum clearances	
Ⓚ Side clearance	2 5/32″
Ⓛ Side clearance - flush with door - full rotation	5 5/16″
Ⓜ Side clearance - flush with door - 90° rotation	3 17/32″
Ⓝ Rear clearance (incl. rear compartment)	3 1/32″
Ⓞ Vent (above refrigertor cabinet or around top of cupboard)	1 31/32″
Ⓟ Door clearance - hinge side flush with chassis - full rotation	14 3/8″
Ⓠ Door clearance - hinge side flush with door - full rotation	9 27/32″

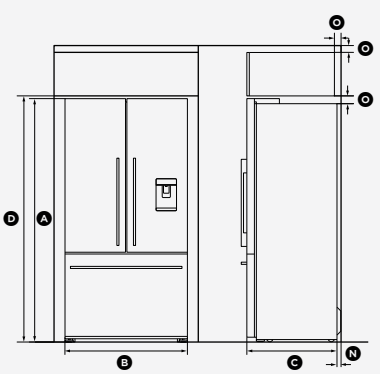

Front View Profile View

Plan View
Flush with refrigerator chassis

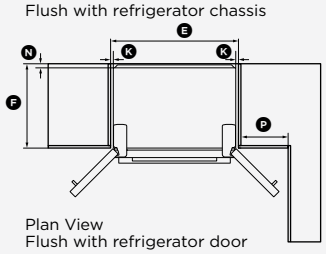

Plan View
Flush with refrigerator door

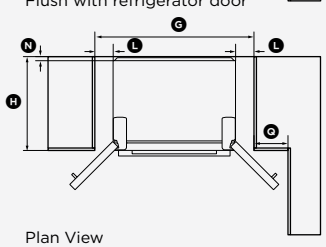

Plan View
Flush with refrigerator door
- 90° door rotation

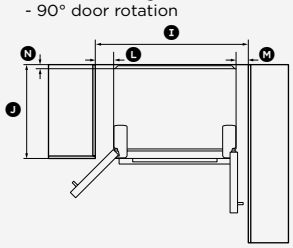

17 cu.ft French Door Refrigerator (Flat door)

Model no:
RF170ADUX4 (Ice & Water),
RF170ADX4

Dimensions	inches
Ⓐ Overall height of product	67 17/32″
Ⓑ Overall width of product	31 3/32″
Ⓒ Overall depth of product (excl. handles, incl. evaporator)	27 3/8″
Cabinetry dimensions	
Ⓓ Inside height of cavity	68 5/16″
Flush with refrigerator chassis—full door rotation	
Ⓔ Inside width	32 11/16″
Ⓕ Inside depth	24 13/32″
Flush with refrigerator door–full door rotation	
Ⓖ Inside width	41 23/32″
Ⓗ Inside depth flush to flat door	27 3/8″
Flush with refrigerator door–90° rotation	
Ⓘ Inside width	39 31/32″
Ⓙ Inside depth flush to flat door	27 3/8″
Minimum clearances	
Ⓚ Side clearance	25/32″
Ⓛ Side clearance-hinge side flush with door-full rotation	5 5/16″
Ⓜ Side clearance-hinge side flush with door-90° rotation	3 17/32″
Ⓝ Rear clearance (incl. evaporator tray)	1 3/16″
Ⓞ Vent (above refrigerator cabinet or around top of cupboard)	1 31/32″
Ⓟ Door clearance-hinge side flush with chassis-full rotation	12 25/32″
Ⓠ Door clearance-hinge side flush with door-full rotation	8 9/32″

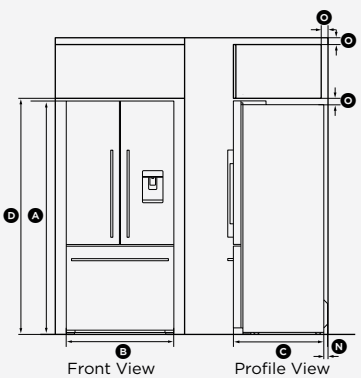

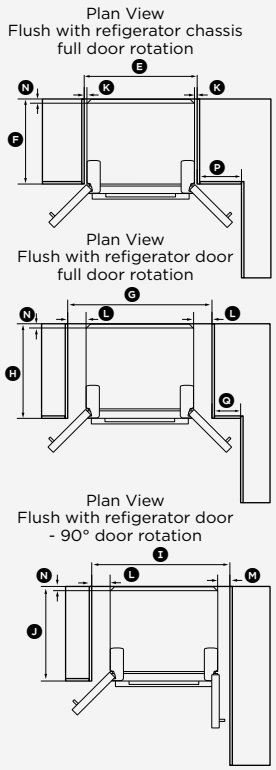

17 cu.ft Bottom Freezer Refrigerator (Flat door)

Model no:
RF170WDRUX5, RF170WDLUX5 (ice & Water),
RF170WDRX5, RF170WDLX5

Dimensions	inches
Ⓐ Overall height of product	67 17/32″
Ⓑ Overall width of product	31 3/32″
Ⓒ Overall depth of product (excl. handle, incl. evaporator)	27 3/8″
Cabinetry dimensions	
Ⓓ Inside height of cavity	68 5/16″
Flush with refrigerator chassis–full door rotation	
Ⓔ Inside width	32 11/16″
Ⓕ Inside depth	24 13/32″
Flush with refrigerator door–full door rotation	
Ⓖ Inside width	37 7/32″
Ⓗ Inside depth flush to flat door	27 3/8″
Flush with refrigerator door–90° rotation	
Ⓘ Inside width	35 7/16″
Ⓙ Inside depth flush to flat door	27 3/8″
Minimum clearances	
Ⓚ Side clearance	25/32″
Ⓛ Side clearance-hinge side flush with door-full rotation	5 5/16″
Ⓜ Side clearance-hinge side flush with door-90° rotation	3 17/32″
Ⓝ Rear clearance (including evaporator tray)	1 3/16″
Ⓞ Vent (above refrigerator cabinet or around top of cupboard)	1 31/32″
Ⓟ Door clearance-hinge side flush with chassis-full rotation	25 13/32″
Ⓠ Door clearance-hinge side flush with door-full rotation	20 7/8″

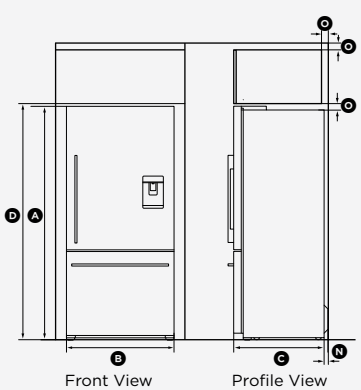

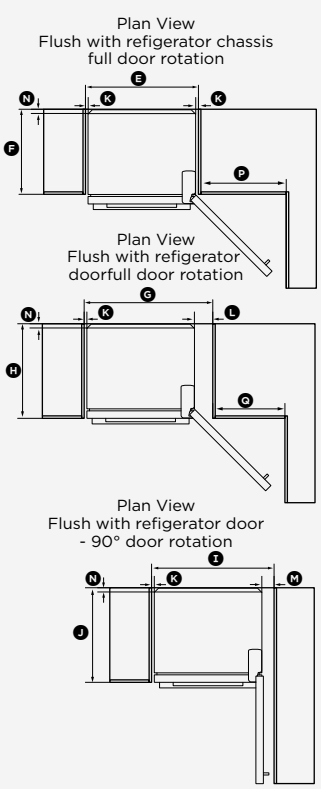

13.5 cu.ft Bottom Freezer Refrigerator (Flat door)

Model no:
RF135BDRUX4, RF135BDLUX4 (ice & Water),
RF135BDRX4, RF135BDLX4

Dimensions	inches
Ⓐ Overall height of product	67 17/32″
Ⓑ Overall width of product	25″
Ⓒ Overall depth of product (excl. handle, incl. evaporator)	27 3/8″
Cabinetry dimensions	
Ⓓ Inside height of cavity	68 5/16″
Flush with refrigerator chassis – full door rotation	
Ⓔ Inside width	26 9/16″
Ⓕ Inside depth	24 13/32″
Flush with refrigerator door – full door rotation	
Ⓖ Inside width	31 3/32″
Ⓗ Inside depth flush to flat door	27 3/8″
Flush with refrigerator door – 90° rotation	
Ⓘ Inside width	29 11/32″
Ⓙ Inside depth flush to flat door	27 3/8″
Minimum clearances	
Ⓚ Side clearance	25/32″
Ⓛ Side clearance - hinge side flush with door - full rotation	5 5/16″
Ⓜ Side clearance - hinge side flush with door - 90° rotation	3 17/32″
Ⓝ Rear clearance (including evaporator tray)	1 3/16″
Ⓞ Vent (above refrigerator cabinet or around top of cupboard)	1 31/32″
Ⓟ Door clearance - hinge side flush with chassis - full rotation	20 15/32″
Ⓠ Door clearance - hinge side flush with door - full rotation	15 15/16″

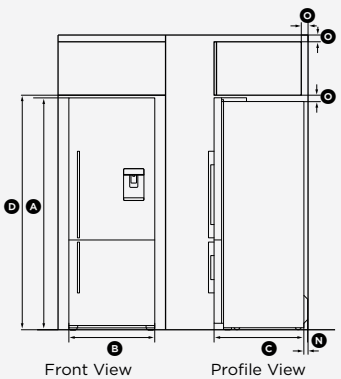

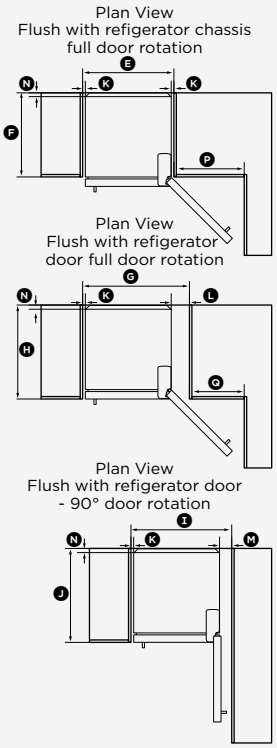

17.6 cu.ft Bottom Freezer Refrigerator (Curved door)

Model no:
E522BRXU5, E522BLXU5 (Ice & Water)

Dimensions	inches
Ⓐ Overall height of product	67 1/8″
Ⓑ Overall width of product	31 3/32″
Ⓒ Overall depth of product (excl. handle, incl. evaporator)	28 5/32″
Cabinetry dimensions	
Ⓓ Inside height of cavity	68 5/16″
Flush with refrigerator chassis – full door rotation	
Ⓔ Inside width	32 11/16″
Ⓕ Inside depth	24 13/32″
Flush with refrigerator door – full door rotation	
Ⓖ Inside width	37 7/32″
Ⓗ Inside depth flush to curved door	26 25/32″
Flush with refrigerator door – 90° rotation	
Ⓘ Inside width	35 7/16″
Ⓙ Inside depth flush to curved door	26 25/32″
Minimum clearances	
Ⓚ Side clearance	25/32″
Ⓛ Side clearance - hinge side flush with door - full rotation	5 5/16″
Ⓜ Side clearance - hinge side flush with door - 90° rotation	3 17/32″
Ⓝ Rear clearance (incl. evaporator tray)	1 3/16″
Ⓞ Vent (above refrigerator cabinet or around top of cupboard)	1 31/32″
Ⓟ Door clearance - hinge side flush with chassis - full rotation	25 13/32″
Ⓠ Door clearance - hinge side flush with door - full rotation	20 7/8″

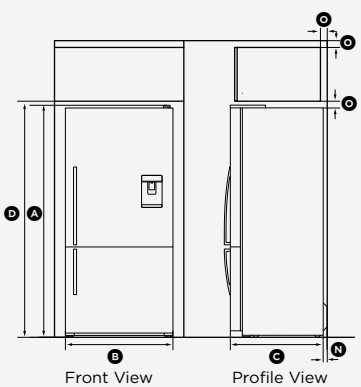

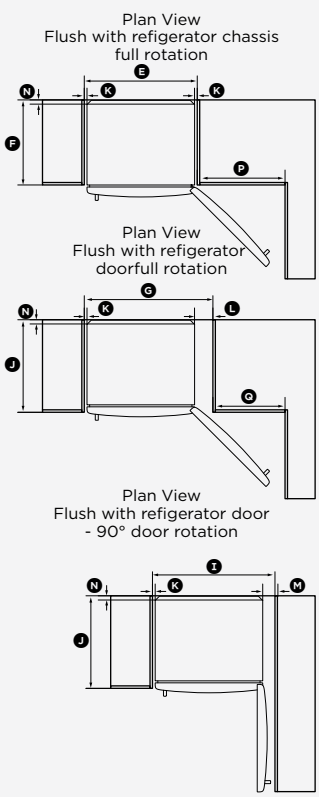

17.6 cu.ft Bottom Freezer Refrigerator (Curved door)

Model no:
E522BRX5, E522BLX5,
E522BRE5, E522BLE5

Dimensions	**inches**
Ⓐ Overall height of product	66 15/16″
Ⓑ Overall width of product	31 3/32″
Ⓒ Overall depth of product (excl. handles, incl. evaporator)	28 5/32″
Cabinetry dimensions	
Ⓓ Inside height of cavity	68 5/16″
Flush with refrigerator chassis – full door rotation	
Ⓔ Inside width	32 11/16″
Ⓕ Inside depth	24 13/32″
Flush with refrigerator door – full door rotation	
Ⓖ Inside width	37 7/32″
Ⓗ Inside depth flush to flat door	26 25/32″
Flush with refrigerator door – 90° rotation	
Ⓘ Inside width	35 7/16″
Ⓙ Inside depth flush to flat door	26 25/32″
Minimum clearances	
Ⓚ Side clearance	25/32″
Ⓛ Side clearance - hinge side flush with door - full rotation	5 5/16″
Ⓜ Side clearance - hinge side flush with door - 90° rotation	3 17/32″
Ⓝ Rear clearance (incl. evaporator tray)	1 3/16″
Ⓞ Vent (above refrigerator cabinet or around top of cupboard)	1 31/32″
Ⓟ Door clearance - hinge side flush with chassis - full rotation	25 13/32″
Ⓠ Door clearance - hinge side flush with door - full rotation	20 7/8″

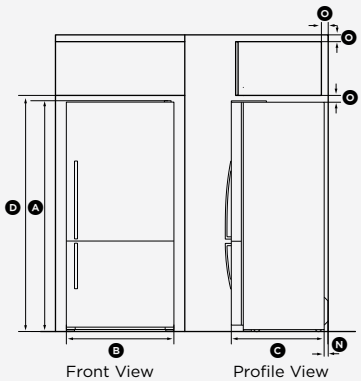

Plan View
Flush with refigerator chassis
full rotation

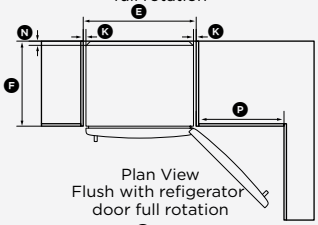

Plan View
Flush with refigerator
door full rotation

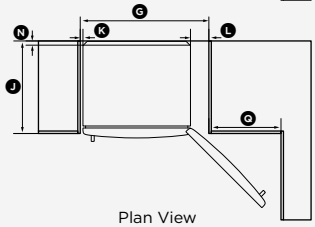

Plan View
Flush with refigerator door
- 90° door rotation

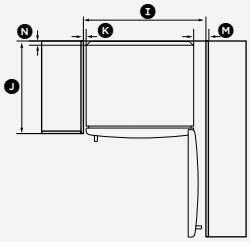

CLEAN

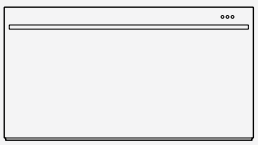

Type of appliance	**DishDrawer™ Wide Dishwasher**	**DishDrawer™ Wide Dishwasher**
Model no.	**DD36SDFTX2**	**DD36STI2**
Finish	**EZKleen stainless steel flat door**	**Integrated (apply your own cabinetry façade)**
Dimensions (excluding handles)	H18 13⁄16″ x W35 1⁄4″ x D22 15⁄32″	H18 13⁄16″ x W33 21⁄32″ x D22 13⁄32 – 22 9⁄16″
Energy Star Certified	●	●
Energy usage (kWh per year)	266	250
Water usage	3.6 gallons per cycle	3.6 gallons per cycle
Performance		
SmartDrive™ technology	●	●
Load sensing	●	●
Flow through detergent dispenser	●	●
Quiet operation	●	●
Fan assisted drying	●	●
Capacity and loading		
Place settings per drawer	9	9
Flexible racking system	●	●
Fold down tines	●	●
Adjustable racks and cup racks	●	●
Accommodates long stemmed glasses	●	●
Accommodates plates up to	12 7⁄16″	12 7⁄16″
Wash programs		
Nine wash programs	●	●
Eco options	●	●
Permanent memory of the last cycle used	●	●
Safety		
Three stage total flood protection	●	●
Controls		
Wireless remote		●
Concealed control panels with single touch programming	●	●
Key lock	●	
Child lock	●	
Closed door auto-lock		●
End of cycle beeps	●	●
One button start	●	●
Energy saving delay start option up to 12 hours	●	●
Rinse aid indicator light and lens	●	●
Electronic fault/Diagnostic indicator	●	●
Power requirements		
Supply voltage	110 – 120V	110 – 120V
Supply frequency	60Hz	60Hz
AMP draw	6.9A	6.9A
Accessories		
Cutlery basket	●	●
Knife clip	●	●
Multi purpose clip	●	●
Warranty	1 year	1 year

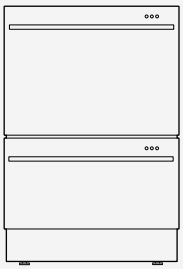

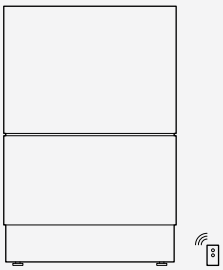

Type of appliance	**DishDrawer™ Tall Double Dishwasher**	**DishDrawer™ Tall Double Dishwasher**
Model no.	**DD24DDFTX7**	**DD24DTI7** **DD24DHTI7**
Finish	**EZKleen stainless steel flat door**	**Integrated (apply your own cabinetry façade)**
Dimensions (excluding handles)	H34 – 36 3/8″ x W23 19/32″ x D22 15/32″	H34 – 36 3/8″ x W23 19/32″ x D22 13/32 – 22 9/16″
Energy Star Certified	●	●
Energy usage (kWh per year)	276	276
Water usage	2 gallons per drawer	2 gallons per drawer
Performance		
SmartDrive™ technology	●	●
Load sensing	●	●
Flow through detergent dispenser	●	●
Quiet operation	●	●
Fan assisted drying	●	●
Built-in water softener		DD24DHTI7 model only
Capacity and loading		
Place settings per drawer	7	7
Flexible racking system	●	●
Fold down and pitch adjustable tines	●	●
Adjustable racks and cup racks	●	●
Accommodates long stemmed glasses	●	●
Accommodates plates up to	13″ top drawer	13″ top drawer
Wash programs		
Nine wash programs	●	●
Genuine half load wash option	●	●
Eco options	●	●
Permanent memory of the last cycle used	●	●
Safety		
Three stage total flood protection	●	●
Controls		
Wireless remote		●
Concealed control panels with single touch programming	●	●
Key lock	●	
Child lock	●	
Closed door auto-lock		●
End of cycle beeps	●	●
One button start	●	●
Energy saving delay start option up to 12 hours	●	●
Rinse aid indicator light and lens	●	●
Electronic fault/Diagnostic indicator	●	●
Power requirements		
Supply voltage	110 – 120V	110 – 120V
Supply frequency	60Hz	60Hz
AMP draw	10.6A	10.6A
Accessories		
Cutlery basket	2	2
Knife clip	2	2
Kickstrip	●	●
Warranty	1 year	1 year

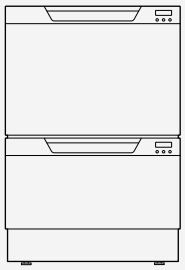

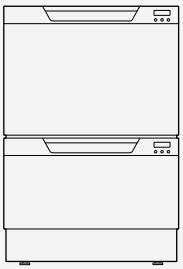

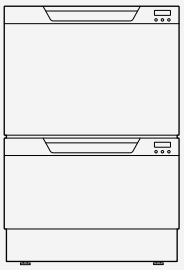

Type of appliance	DishDrawer™ Tall Double Dishwasher	DishDrawer™ Tall Double Dishwasher	DishDrawer™ Tall Double Dishwasher
Model no.	**DD24DCTX7** **DD24DCHTX7**	**DD24DCTB7**	**DD24DCTW7**
Finish	**EZKleen stainless steel curved door**	**Black curved door**	**White curved door**
Dimensions (excluding handles)	H34–36 3/8″ x W23 19/32″ x D22 15/32″	H34–36 3/8″ x W23 19/32″ x D22 9/16″	H34–36 3/8″ x W23 19/32″ x D22 9/16″
Energy Star Certified	●	●	●
Energy usage (kWh per year)	276	276	276
Water usage	2 gallons per drawer	2 gallons per drawer	2 gallons per drawer
Performance			
SmartDrive™ technology	●	●	●
Load sensing	●	●	●
Flow through detergent dispenser	●	●	●
Quiet operation	●	●	●
Fan assisted drying	●	●	●
Built-in water softener	DD24DCHTX7 model only		
Capacity and loading			
Place settings per drawer	7	7	7
Flexible racking system	●	●	●
Fold down and pitch adjustable tines	●	●	●
Adjustable racks and cup racks	●	●	●
Accommodates long stemmed glasses	●	●	●
Accommodates plates up to	13″ top drawer	13″ top drawer	13″ top drawer
Wash programs			
Nine wash programs	●	●	●
Genuine half load wash option	●	●	●
Eco options	●	●	●
Permanent memory of the last cycle used	●	●	●
Safety			
Three stage total flood protection	●	●	●
Controls			
Concealed control panels with single touch programming	●	●	●
Key lock	●	●	●
Child lock	●	●	●
End of cycle beeps	●	●	●
One button start	●	●	●
Energy saving delay start option up to 12 hours	●	●	●
Rinse aid indicator light and lens	●	●	●
Electronic fault/Diagnostic indicator	●	●	●
Power requirements			
Supply voltage	110–120V	110–120V	110–120V
Supply frequency	60Hz	60Hz	60Hz
AMP draw	10.6A	10.6A	10.6A
Accessories			
Cutlery basket	2	2	2
Knife clip	2	2	2
Kickstrip	●	●	●
Warranty	1 year	1 year	1 year

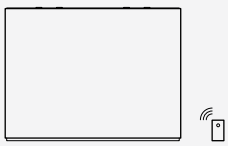

Type of appliance	DishDrawer™ Tall Single Dishwasher	DishDrawer™ Tall Single Dishwasher
Model no.	**DD24SDFTX7**	**DD24STI7** **DD24SHTI7**
Finish	**EZKleen stainless steel flat door**	**Integrated (apply your own cabinetry façade)**
Dimensions (excluding handles)	H18 13/16″ x W23 19/32″ x D22 15/32″	H17 7/8 – 18 13/16″ x W23 19/32″ x D22 13/32 – 22 9/16″
Energy usage (kWh per year)	141	155
Water usage	2 gallons per cycle	2 gallons per cycle
Performance		
SmartDrive™ technology	●	●
Load sensing	●	●
Flow through detergent dispenser	●	●
Quiet operation	●	●
Fan assisted drying	●	●
Built-in water softener		DD24SHTI7 model only
Capacity and loading		
Place settings per drawer	7	7
Flexible racking system	●	●
Fold down and pitch adjustable tines	●	●
Adjustable racks and cup racks	●	●
Accommodates long stemmed glasses	●	●
Accommodates plates up to	13″	13″
Wash programs		
Nine wash programs	●	●
Eco options	●	●
Permanent memory of the last cycle used	●	●
Safety		
Three stage total flood protection	●	●
Controls		
Wireless remote		●
Concealed control panels with single touch programming	●	●
Key lock	●	
Child lock	●	
Closed door auto-lock		●
End of cycle beeps	●	●
One button start	●	●
Energy saving delay start option up to 12 hours	●	●
Rinse aid indicator light and lens	●	●
Electronic fault/Diagnostic indicator	●	●
Power requirements		
Supply voltage	110 – 120V	110 – 120V
Supply frequency	60Hz	60Hz
AMP draw	5.8A	5.8A
Accessories		
Cutlery basket	●	●
Knife clip	●	●
Warranty	1 year	1 year

Type of appliance	DishDrawer™ Tall Single Dishwasher	DishDrawer™ Tall Single Dishwasher	DishDrawer™ Tall Single Dishwasher
Model no.	**DD24SCTX7** **DD24SCHTX7**	**DD24SCTB7**	**DD24SCTW7**
Finish	**EZKleen stainless steel curved door**	**Black curved door**	**White curved door**
Dimensions (excluding handles)	H17⅞" x W23 19/32" x D22 9/16"	H17⅞" x W23 19/32" x D22 9/16"	H17⅞" x W23 19/32" x D22 9/16"
Energy usage (kWh per year)	141	141	141
Water usage	2 gallons per cycle	2 gallons per cycle	2 gallons per cycle
Performance			
SmartDrive™ technology	●	●	●
Load sensing	●	●	●
Flow through detergent dispenser	●	●	●
Quiet operation	●	●	●
Fan assisted drying	●	●	●
Built-in water softener	DD24SCHTX7 model only		
Capacity and loading			
Place settings per drawer	7	7	7
Flexible racking system	●	●	●
Fold down and pitch adjustable tines	●	●	●
Adjustable racks and cup racks	●	●	●
Accommodates long stemmed glasses	●	●	●
Accommodates plates up to	13"	13"	13"
Wash programs			
Nine wash programs	●	●	●
Eco options	●	●	●
Permanent memory of the last cycle used	●	●	●
Safety			
Three stage total flood protection	●	●	●
Controls			
Concealed control panels with single touch programming	●	●	●
Key lock	●	●	●
Child lock	●	●	●
End of cycle beeps	●	●	●
One button start	●	●	●
Energy saving delay start option up to 12 hours	●	●	●
Rinse aid indicator light and lens	●	●	●
Electronic fault/Diagnostic indicator	●	●	●
Power requirements			
Supply voltage	110–120V	110–120V	110–120V
Supply frequency	60Hz	60Hz	60Hz
AMP draw	5.8A	5.8A	5.8A
Accessories			
Cutlery basket	●	●	●
Knife clip	●	●	●
Warranty	1 year	1 year	1 year

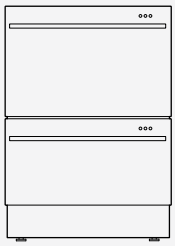

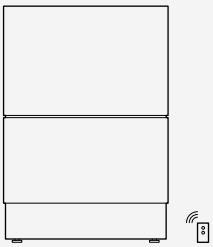

Type of appliance	DishDrawer™ Double Dishwasher	DishDrawer™ Double Dishwasher
Model no.	**DD24DDFX7**	**DD24DI7**
Finish	**EZKleen stainless steel flat door**	**Integrated (apply your own cabinetry façade)**
Dimensions (excluding handles)	H32 9/32 – 34 21/34″ x W23 19/32″ x D22 15/32″	H32 9/32 – 34 21/34″ x W23 19/32″ x D22 13/32 – 22 9/16″
Energy Star certified	●	●
Energy usage (kWh per year)	276	276
Water usage	2 gallons per drawer	2 gallons per drawer
Performance		
SmartDrive™ technology	●	●
Load sensing	●	●
Flow through detergent dispenser	●	●
Quiet operation	●	●
Fan assisted drying	●	●
Capacity and loading		
Place settings per drawer	7	7
Flexible racking system	●	●
Fold down and pitch adjustable tines	●	●
Adjustable racks and cup racks	●	●
Accommodates long stemmed glasses	●	●
Accommodates plates up to	11½″	11½″
Wash programs		
Nine wash programs	●	●
Genuine half load wash option	●	●
Eco options	●	●
Permanent memory of the last cycle used	●	●
Safety		
Three stage total flood protection	●	●
Controls		
Wireless remote		●
Concealed control panels with single touch programming	●	●
Key lock	●	
Child lock	●	
Closed door auto-lock		●
End of cycle beeps	●	●
One button start	●	●
Energy saving delay start option up to 12 hours	●	●
Rinse aid indicator light and lens	●	●
Electronic fault/Diagnostic indicator	●	●
Power requirements		
Supply voltage	110 – 120V	110 – 120V
Supply frequency	60Hz	60Hz
AMP draw	10.6A	10.6A
Accessories		
Cutlery basket	2	2
Knife clip	2	2
Kickstrip	●	●
Warranty	1 year	1 year

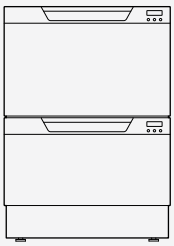

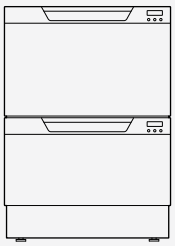

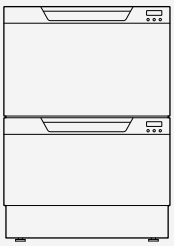

Type of appliance	DishDrawer™ Double Dishwasher	DishDrawer™ Double Dishwasher	DishDrawer™ Double Dishwasher
Model no.	**DD24DCX7**	**DD24DCB7**	**DD24DCW7**
Finish	**EZKleen stainless steel curved door**	**Black curved door**	**White curved door**
Dimensions (excluding handles)	H32 9/32–34 21/32" x W23 19/32" x D22 9/16"	H32 9/32–34 21/32" x W23 19/32" x D22 9/16"	H32 9/32–34 21/32" x W23 19/32" x D22 9/16"
Energy Star certified	●	●	●
Energy usage (kWh per year)	276	276	276
Water usage	2 gallons per drawer	2 gallons per drawer	2 gallons per drawer
Performance			
SmartDrive™ technology	●	●	●
Load sensing	●	●	●
Flow through detergent dispenser	●	●	●
Quiet operation	●	●	●
Fan assisted drying	●	●	●
Capacity and loading			
Place settings per drawer	7	7	7
Flexible racking system	●	●	●
Fold down and pitch adjustable tines	●	●	●
Adjustable racks and cup racks	●	●	●
Accommodates long stemmed glasses	●	●	●
Accommodates plates up to	11½"	11½"	11½"
Wash programs			
Nine wash programs	●	●	●
Genuine half load wash option	●	●	●
Eco options	●	●	●
Permanent memory of the last cycle used	●	●	●
Safety			
Three stage total flood protection	●	●	●
Controls			
Concealed control panels with single touch programming	●	●	●
Key lock	●	●	●
Child lock	●	●	●
End of cycle beeps	●	●	●
One button start	●	●	●
Energy saving delay start option up to 12 hours	●	●	●
Rinse aid indicator light and lens	●	●	●
Electronic fault/Diagnostic indicator	●	●	●
Power requirements			
Supply voltage	110–120V	110–120V	110–120V
Supply frequency	60Hz	60Hz	60Hz
AMP draw	10.6A	10.6A	10.6A
Accessories			
Cutlery basket	2	2	2
Knife clip	2	2	2
Kickstrip	●	●	●
Warranty	1 year	1 year	1 year

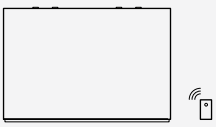

Type of appliance	**DishDrawer™ Single Dishwasher**	**DishDrawer™ Single Dishwasher**
Model no.	**DD24SDFX7**	**DD24SI7**
Finish	**EZKleen stainless steel flat door**	**Integrated (apply your own cabinetry façade)**
Dimensions (excluding handles)	H16 5/32″ x W23 19/32″ x D22 15/32″	H16 5/32″ x W23 19/32″ x D22 13/32 – 22 9/16″
Energy usage (kWh per year)	141	155
Water usage	2 gallons per cycle	2 gallons per cycle
Performance		
SmartDrive™ technology	●	●
Load sensing	●	●
Flow through detergent dispenser	●	●
Quiet operation	●	●
Fan assisted drying	●	●
Capacity and loading		
Place settings per drawer	7	7
Flexible racking system	●	●
Fold down and pitch adjustable tines	●	●
Adjustable racks and cup racks	●	●
Accommodates long stemmed glasses	●	●
Accommodates plates up to	11½″	11½″
Wash programs		
Nine wash programs	●	●
Eco options	●	●
Permanent memory of the last cycle used	●	●
Safety		
Three stage total flood protection	●	●
Controls		
Wireless remote		●
Concealed control panels with single touch programming	●	●
Key lock	●	
Child lock	●	
Closed door auto-lock		●
End of cycle beeps	●	●
One button start	●	●
Energy saving delay start option up to 12 hours	●	●
Rinse aid indicator light and lens	●	●
Electronic fault/Diagnostic indicator	●	●
Power requirements		
Supply voltage	110 – 120V	110 – 120V
Supply frequency	60Hz	60Hz
AMP draw	5.8A	5.8A
Accessories		
Cutlery basket	●	●
Knife clip	●	●
Warranty	1 year	1 year

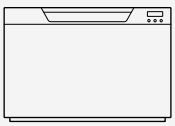

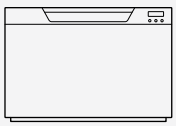

Type of appliance	DishDrawer™ Single Dishwasher	DishDrawer™ Single Dishwasher	DishDrawer™ Single Dishwasher
Model no.	**DD24SCX7**	**DD24SCB7**	**DD24SCW7**
Finish	**EZKleen stainless steel curved door**	**Black curved door**	**White curved door**
Dimensions (excluding handles)	H16 5/32" x W23 19/32" x D22 9/16"	H16 5/32" x W23 19/32" x D22 9/16"	H16 5/32" x W23 19/32" x D22 9/16"
Energy usage (kWh per year)	141	141	141
Water usage	2 gallons per cycle	2 gallons per cycle	2 gallons per cycle
Performance			
SmartDrive™ technology	●	●	●
Load sensing	●	●	●
Flow through detergent dispenser	●	●	●
Quiet operation	●	●	●
Fan assisted drying	●	●	●
Capacity and loading			
Place settings per drawer	7	7	7
Flexible racking system	●	●	●
Fold down and pitch adjustable tines	●	●	●
Adjustable racks and cup racks	●	●	●
Accommodates long stemmed glasses	●	●	●
Accommodates plates up to	11½"	11½"	11½"
Wash programs			
Nine wash programs	●	●	●
Eco options	●	●	●
Permanent memory of the last cycle used	●	●	●
Safety			
Three stage total flood protection	●	●	●
Controls			
Concealed control panels with single touch programming	●	●	●
Key lock	●	●	●
Child lock	●	●	●
End of cycle beeps	●	●	●
One button start	●	●	●
Energy saving delay start option up to 12 hours	●	●	●
Rinse aid indicator light and lens	●	●	●
Electronic fault/Diagnostic indicator	●	●	●
Power requirements			
Supply voltage	110–120V	110–120V	110–120V
Supply frequency	60Hz	60Hz	60Hz
AMP draw	5.8A	5.8A	5.8A
Accessories			
Cutlery basket	●	●	●
Knife clip	●	●	●
Warranty	1 year	1 year	1 year

DishDrawer™ Wide Dishwasher

Model no:
DD36SDFTX2

Dimensions	inches
Ⓐ Overall height of product	18 13/16"
Ⓑ Overall width of product	35 1/4"
Ⓒ Depth of product front (excl. handle)	23/32"
Ⓓ Depth of product chassis	21 25/32"

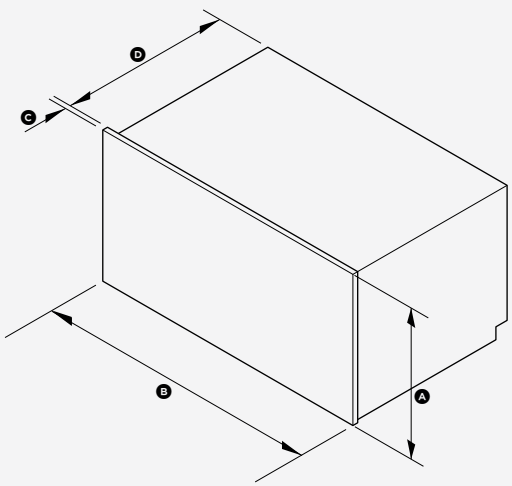

DishDrawer™ Wide Dishwasher

Model no:
DD36STI2

Dimensions	inches
Ⓐ Overall height of product	18 13/16"
Ⓑ Overall width of product	min. 33 21/32"
Ⓒ Depth of product front (excl. handle)	5/8 – 25/32"*
Ⓓ Depth of product chassis	21 25/32"

*Door panel to be manufactured and fitted by cabinetmaker.

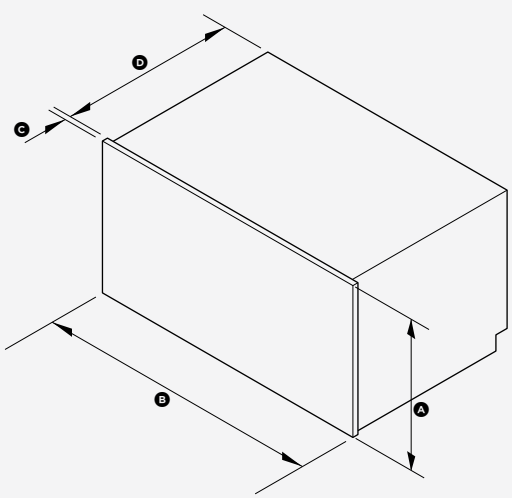

DishDrawer™ Tall Double Dishwasher

Model no:
DD24DDFTX7

Dimensions	inches
Ⓐ Overall height of product	min. 34″ – max. 36 3/8″
Ⓑ Overall width of product	23 19/32″
Ⓒ Depth of product front (excl. handle)	23/32″
Ⓓ Depth of product chassis	21 25/32″

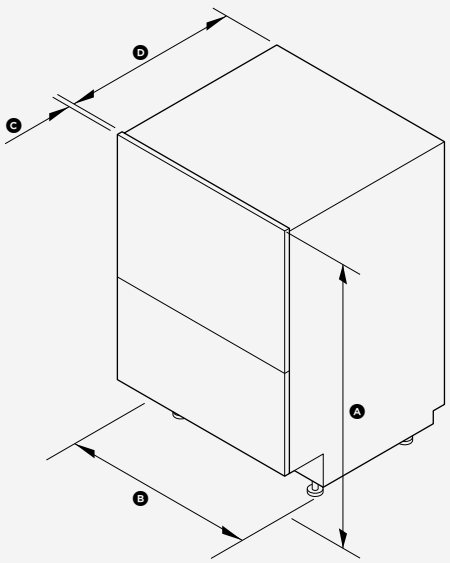

DishDrawer™ Tall Double Dishwasher

Model no:
DD24DTI7, DD24DHTI7

Dimensions	inches
Ⓐ Overall height of product	min. 34″ – max. 36 3/8″
Ⓑ Overall width of product	23 19/32″
Ⓒ Depth of product front (excl. handle)	5/8 – 25/32″*
Ⓓ Depth of product chassis	21 25/32″

*Door panels to be manufactured and fitted by cabinetmaker.

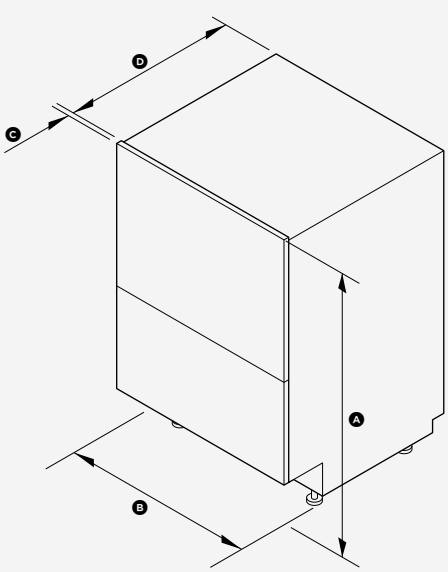

DishDrawer™ Tall Double Dishwasher

Model no:

DD24DCTX7, DD24DCHTX7, DD24DCTB7, DD24DCTW7

Dimensions	inches
Ⓐ Overall height of product	min. 34 " – max. 36 3/8"
Ⓑ Overall width of product	23 19/32"
Ⓒ Depth of product front (excl. handle)	25/32"*
Ⓓ Depth of product chassis	21 25/32"

*Product front varies along the curve to a depth of 1 5/32".

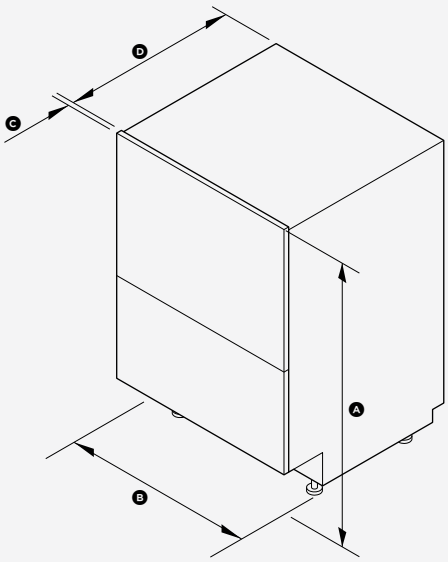

DishDrawer™ Tall Single Dishwasher

Model no:

DD24SDFTX7

Dimensions	inches
Ⓐ Overall height of product	18 13/16"
Ⓑ Overall width of product	23 19/32"
Ⓒ Depth of product front (excl. handle)	23/32"
Ⓓ Depth of product chassis	21 25/32"

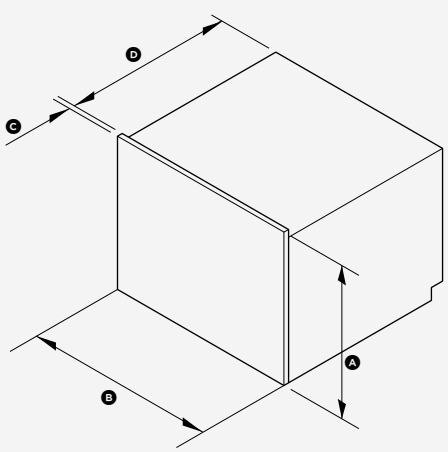

DishDrawer™ Tall Single Dishwasher

Model no:

DD24STI7, DD24SHTI7

Dimensions	inches
Ⓐ Overall height of product	17 7/8" – 18 13/16"*
Ⓑ Overall width of product	23 19/32"
Ⓒ Depth of product front (excl. handle)	5/8 – 2 5/32"*
Ⓓ Depth of product chassis	21 25/4"

*Door panels to be manufactured and fitted by cabinetmaker.

*You may choose to install Tall Height Integrated models into either a 17 7/8" or a 18 13/16" high cavity. Note: the minimum height of the custom drawer front panel will also be different for these options.

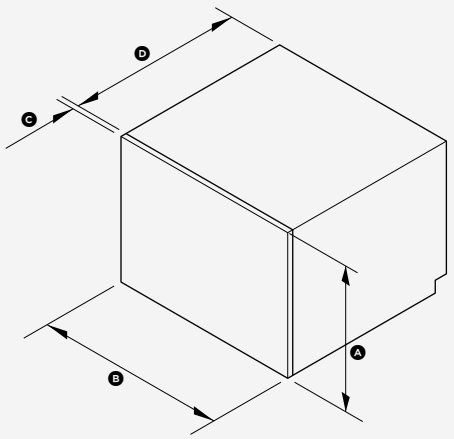

DishDrawer™ Tall Single Dishwasher

Model no:

DD24SCTX7, DD24SCHTX7,
DD24SCTB7, DD24SCTW7

Dimensions	inches
Ⓐ Overall height of product	17 7/8"
Ⓑ Overall width of product	23 9/32"
Ⓒ Depth of product measured at edge of door	2 5/32*"
Ⓓ Depth of product chassis	21 2 5/32"

*Product varies along the curve to a depth of 1 5/32".

*You may choose to install Tall Height Integrated models into either a 17 7/8" or a 18 13/16" high cavity. Note: the minimum height of the custom drawer front panel will also be different for these options.

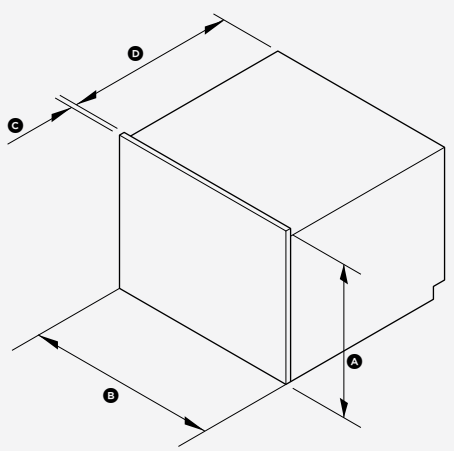

DishDrawer™ Double Dishwasher

Model no:
DD24DDFX7

Dimensions	inches
Ⓐ Overall height of product	min. 32 9/32" – max. 34 21/32"
Ⓑ Overall width of product	23 19/32"
Ⓒ Depth of product front (excl. handle)	23/32"
Ⓓ Depth of product chassis	21 25/32"

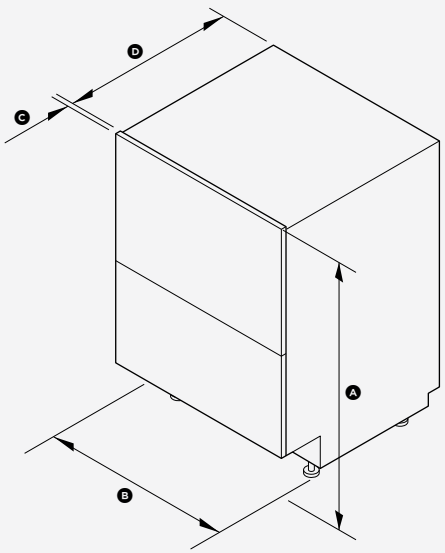

DishDrawer™ Double Dishwasher

Model no:
DD24DI7

Dimensions	inches
Ⓐ Overall height of product	min. 32 9/32" – max. 34 21/32"
Ⓑ Overall width of product	23 19/32"
Ⓒ Depth of product front (excl. handle)	5/8 – 25/32"*
Ⓓ Depth of product chassis	21 25/32"

*Door panels to be manufactured and fitted by cabinetmaker.

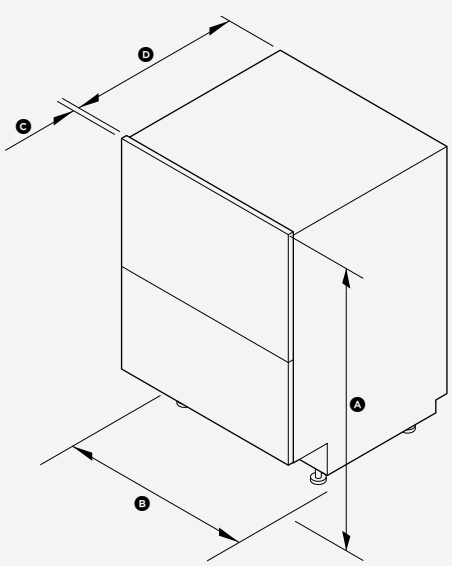

DishDrawer™ Double Dishwasher

Model no:
DD24DCX7, DD24DCB7, DD24DCW7

Dimensions	inches
Ⓐ Overall height of product	min. 32 9/32" – max. 34 21/32"
Ⓑ Overall width of product	23 19/32"
Ⓒ Depth of product front measured at edge of door	25/32"*
Ⓓ Depth of product chassis	21 25/32"

*Product front varies along the curve to a depth of 1 5/32'.

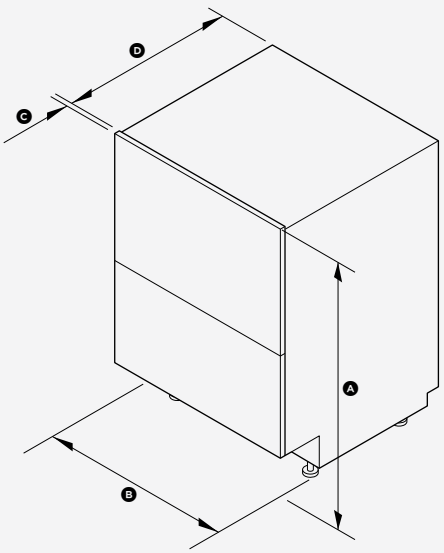

DishDrawer™ Single Dishwasher

Model no:
DD24SDFX7

Dimensions	inches
Ⓐ Overall height of product	16 5/32"
Ⓑ Overall width of product	23 19/32"
Ⓒ Depth of product front (excl. handle)	2 3/32"
Ⓓ Depth of product chassis	21 25/32"

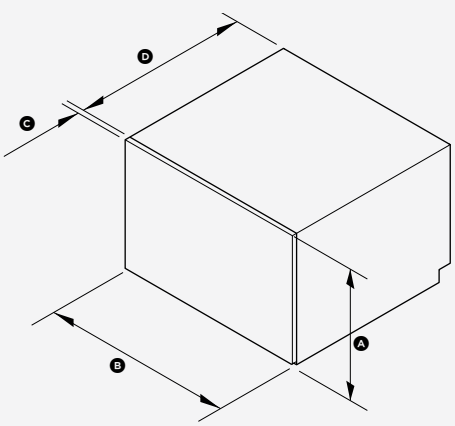

DishDrawer™ Single Dishwasher

Model no:
DD24SI7

Dimensions	inches
Ⓐ Overall height of product	16 5/32″
Ⓑ Overall width of product	23 19/32″
Ⓒ Depth of product front (excl. handle)	5/8 – 25/32″*
Ⓓ Depth of product chassis	21 25/32″

*Door panels to be manufactured and fitted by cabinetmaker.

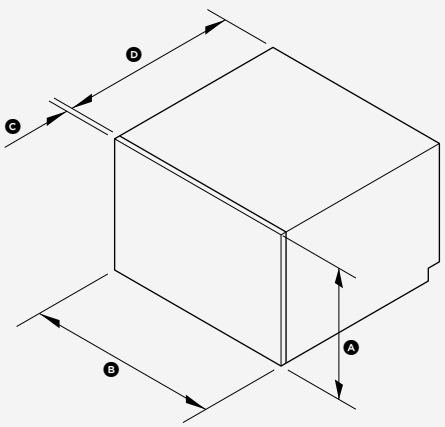

DishDrawer™ Single Dishwasher

Model no:
DD24SCX7, DD24SCB7, DD24SCW7

Dimensions	inches
Ⓐ Overall height of product	16 5/32″
Ⓑ Overall width of product	23 19/32″
Ⓒ Depth of product front measured at edge of door	25/32″*
Ⓓ Depth of product chassis	21 25/32″

*Product front varies along the curve to a depth of 1 5/32″.

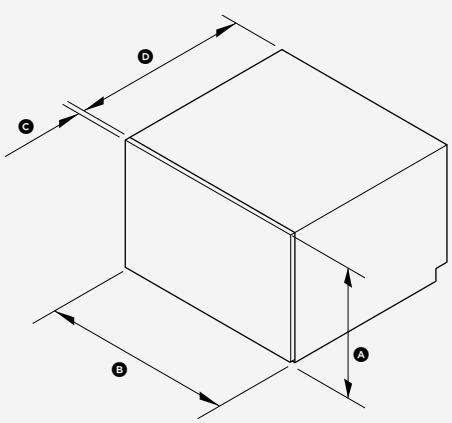

FPBR0629 NOVEMBER 2014.
Copyright © Fisher & Paykel 2014.
All Rights Reserved.

The product dimensions and specifications in this brochure apply to the specific products and models described at the date of issue. Under our policy of continuous product improvement, these dimensions and specifications may change at any time. You should therefore check with your dealer or Fisher & Paykel's Customer Care Center to ensure this brochure correctly describes the products currently available.

Important Notice of Disclaimer: Our brochure contains information on a wide subject of products which we manufacture and/or sell internationally. Some particular products, models or sizes which are detailed in this brochure may not be available for sale and purchase in your area or country, if available the product may have different options to those depicted in the brochure. Before agreeing to purchase a particular product by reference to this brochure please check its availability and accuracy of its description.

This brochure is printed on paper made from sustainable forests using elementary chlorine-free pulp and vegetable based ink. This brochure represents a green choice by Fisher & Paykel to participate in the growing movement towards social responsibility.

Fisher & Paykel Appliances, Inc
695 Town Center Drive, Suite 180
Costa Mesa
CA, 92626
USA

Fisher & Paykel Appliances Canada, Inc
4800 Eastgate Parkway
Unit 2, Mississauga
Ontario L4W 3W6
Canada

A PEACE OF MIND SALE

CUSTOMER CARE
CALL 24 HOURS A DAY, 7 DAYS A WEEK.

Fisher & Paykel has a 24 hour enquiry service that allows customers to speak to a real person about any questions they might have about their products. Our Customer Care Representatives can offer advice on which appliance will best suit their needs, and provide extensive product knowledge on how to use a current Fisher & Paykel product. They can also arrange for a qualified service technician to install selected products and advise consumers where their nearest Fisher & Paykel stockist can be found. Nobody is better qualified to install, service and repair your Fisher & Paykel household appliance than our network of specially trained service technicians.

T 888.936.7872 **E** customercare@fisherpaykel.com

NKBA The Kitchen & Bath Professionals

AMERICAN SOCIETY OF INTERIOR DESIGNERS ASID INDUSTRY PARTNER

Fisher&Paykel

fisherpaykel.com

FPBR0629