SINK SPECIFICATIONS

PINNACLE

BLANCOPERFORMA 1-3/4 BOWL Undermount

Model 513-635

BLANCO

FEATURED MODEL

513-635 **Large, 10" & 9" bowl depths**

ADDITIONAL MODELS

513-636 **Large Reverse, 9" & 10" bowl depths**

FEATURES

- 18 gauge, 304 series stainless steel
- 18/10 chrome/nickel content
- Long-lasting, easy-to-clean, satin polished finish
- Sound deadening insulation
- Rear drain placement

CODE/STANDARDS COMPLIANCE

ASME 112.19.3-00

IAPMO/UPC listed

OPTIONAL ACCESSORIES

Sink Grids: 220-576, 220-580

Cutting Board: 513-140

Colander: 514-015

WARRANTY

Blanco America's BLANCOPERFORMA sinks feature a "NO HASSLE" LIMITED LIFETIME WARRANTY to be free of all manufacturing defects under normal use. See our complete warranty for details.

While Blanco America endeavors to provide accurate information, all dimensions are nominal, cannot be guaranteed, and are subject to change or cancellation. Blanco America assumes no responsibility for use of superseded or voided specifications.

PRODUCT SPECIFICATION

Undermount large sink to be 1-3/4 bowl design, 37-5/8" in length and 20-1/2" in front-to-back depth. Sink to be made from 18 gauge, 304 series stainless steel, with 18/10 chrome/nickel content and long-lasting, easy-to-clean, satin polished finish. Sink to feature rear drain placement. Sink to be Blanco Model 513-635, with left bowl depth of 10" and right bowl depth of 9".

MODEL 513-635

NOMINAL DIMENSIONS

MODEL	OVERALL	CUTOUT SIZE	BOWL DEPTH LEFT	BOWL DEPTH RIGHT	DRAIN DIAMETER
513-635	37-5/8 x 20-1/2	Template provided with approximate 1/8" reveal	10	9	3-1/2

DXF cutout templates available on our web site.

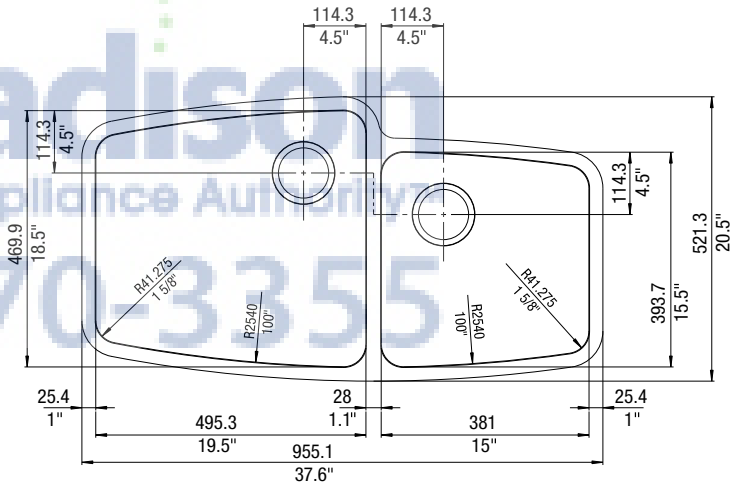

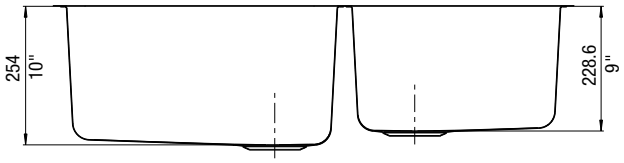

JOB INFORMATION

Job Name: _____

Contact: _____

Date Specified: _____

Specifier: _____

Contractor: _____

BLANCO AMERICA
800.451.5782
www.blancoamerica.com

© 2007 BLANCO AMERICA

AiMadison Your Appliance Authority 800-570-3355