Axor Bouroullec
Axor Bouroullec Wall-Mounted Faucet with Deck-Mounted Single-Lever Handle
Finishes : **Chrome** Part no. : **19137001**

Description

Features

- Laminar spray
- Flow: 1.5 GPM
- Ceramic Cartridge
- Pop-up assembly not included

Item details

List Price	$ 587.00

Technology

EcoSmart

Compliance

ADA

C US

WaterSense Meets EPA Criteria

Product image
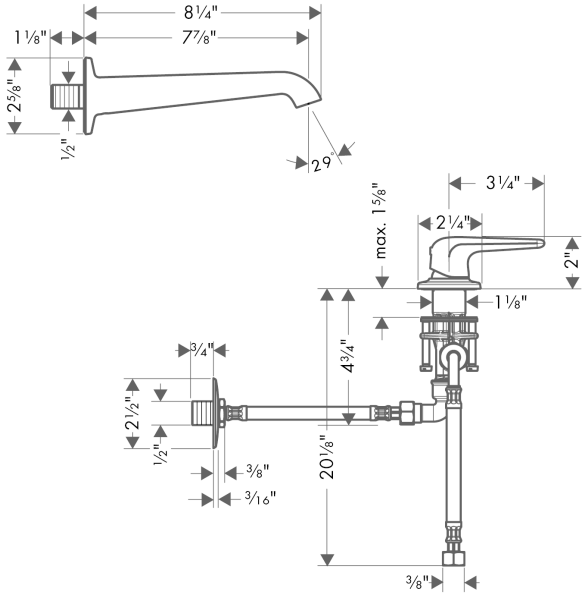
Scale drawing