FAUCET SPECIFICATIONS

Contemporary Kitchen Faucets
BLANCOALTA™ With Side Spray
Model 157-066

BLANCO

FEATURED MODEL

157-066-CR **BLANCOALTA™ Kitchen Faucet in Polished Chrome**

ADDITIONAL MODELS

157-066-ST **Stainless (Satin Nickel)**

FEATURES

- Solid brass body and side spray
- Ceramic disc cartridge
- Extra long supply lines
- 2.2 G.P.M. flow rate
- Installation in a 1-3/8" hole, side spray in 1-3/8" hole

CODE/STANDARDS COMPLIANCE

ASME A112.18.1-2005
IAPMO Listed

WARRANTY

Blanco America's Kitchen faucets feature a "NO HASSLE" LIMITED LIFETIME WARRANTY to be free of all manufacturing defects under normal use. See our complete warranty for details.

While Blanco America endeavors to provide accurate information, all dimensions are nominal, cannot be guaranteed, and are subject to change or cancellation. Blanco America assumes no responsibility for use of superseded or voided specifications.

AiMadison
Your Appliance Authority™
800-570-3355

PRODUCT SPECIFICATION

Kitchen faucet to include solid brass body and side spray, ceramic disc cartridge, and minimalist lever handle. Faucet dimensions to be as follows: Reach: 8-1/2"; Spout Height: 8". Reversible mounting hardware to adapt to thick or thin mounting surfaces. Kitchen faucet to be BLANCOALTA™, Model 157-066-_____in _____finish.

- ❑ Polished Chrome 157-066-CR
- ❑ Stainless (Satin Nickel) 157-066-ST

MODEL 157-066

NOMINAL DIMENSIONS

MODEL	REACH	SPOUT HEIGHT	FAUCET HEIGHT
157-066	8-1/2	8	10-1/4

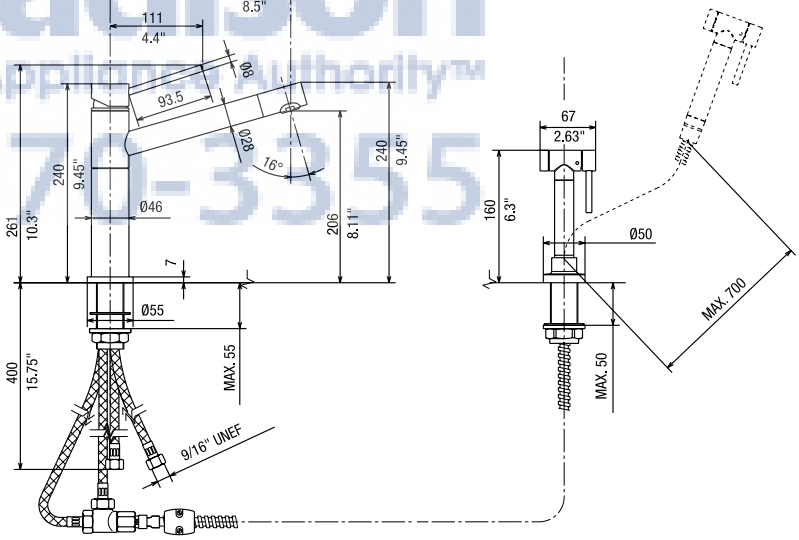

JOB INFORMATION

Job Name: _____

Contact: _____

Date Specified: _____

Specifier: _____

Contractor: _____

See next page for exploded parts drawing and parts list.

BLANCO AMERICA
800.451.5782
www.blancoamerica.com

© 2007 BLANCO AMERICA 04/07

BLANCO

BLANCOALTA™ With Side Spray MODEL 157-066

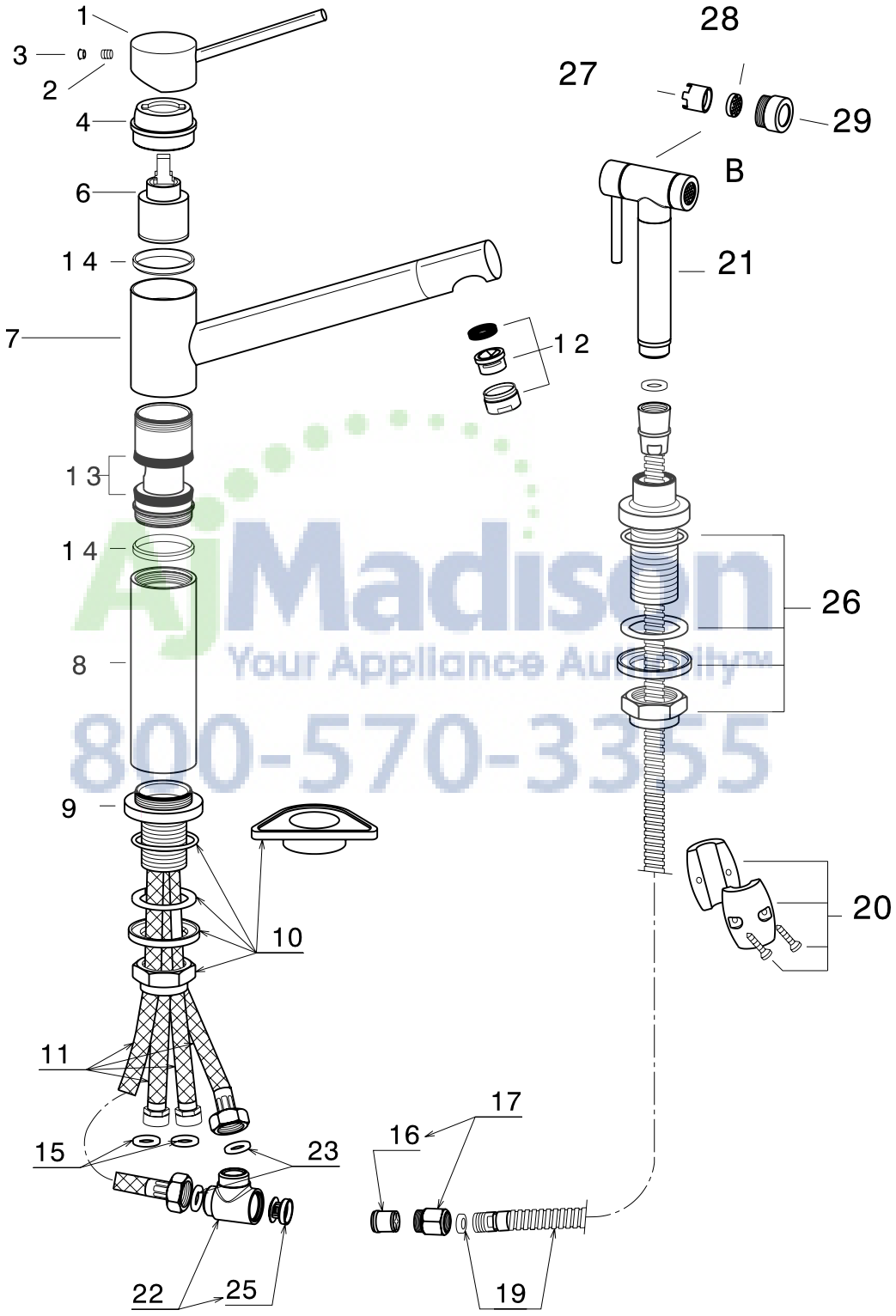

AJMadison
Your Appliance Authority™
800-570-3355

© 2007 BLANCO AMERICA 04/07