This Data Sheet Includes Information On

Maytag

• Product Model Number (s): •

Slide-In Gas Ranges:
MGS5770ADC and MGS5870ADC

• Dimensions (Actual Size) •

Width of top frame:	30 3/4"
Width of case:	30"
Depth:	25 7/8"
Height:	36 7/16"
Door swing:	20"
Height at full leg adjustment:	38"
Height at 0" leg adjustment:	36"

• Additional Information •

• Units depth including door handle is 28 3/8".
• Electrical requirements: 120 VAC , 60Hz. 20 amp grounded circuit protection is recommended.
• Proper operation requires use of range hood.
• Cabinetry over cooktop : 30' minimum clearance between the top of the cooking surface and the bottom of an unprotected wood or metal cabinet. 24" minimum when bottom of wood or metal cabinet is protected by not less than 1/4" flame retardant millboard covered with not less than no. 28 MSG sheet steel, 0.015" stainless steel, 0.024" aluminum or copper.
• To eliminate the hazard of reaching over heated surface units, cabinet storage space located above the surface units should be avoided. If cabinet storage is to be provided, the hazard can be reduced by installing a range hood that projects horizontally a minimum of 5" beyond the bottom of the cabinets.
• Range complies with U.L. requirements for 0" clearance from the range to adjacent vertical side walls and 0" from rear wall.
• Island or peninsula installations with 24" deep base cabinets must use flush back (no rear toe space) cabinets to avoid range interference,. If rear toe space is desired, use 27" or deeper cabinets.
• Some European style cabinets are equipped with vinyl drawer and door fronts. The vinyl may not be designed to withstand the heat produced by the normal operation of the self cleaning range. Discoloration or delamination may occur. To avoid possible damage, Maytag recommends increasing the 30" cabinet opening to 30 1/4" minimum and using a heat shield kit #CABKIT V. The countertop cutout must remain 30".

See page 2 for additional information

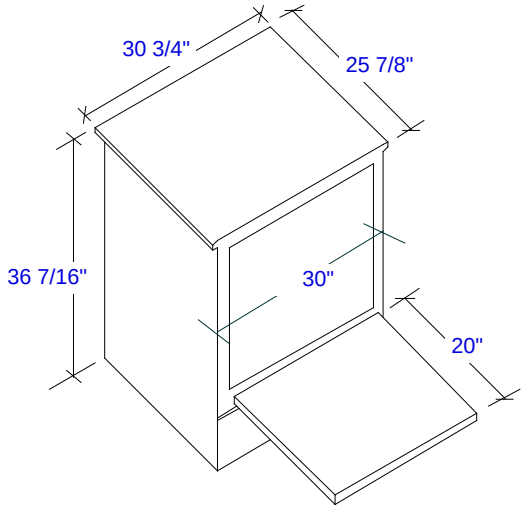

(not to scale)

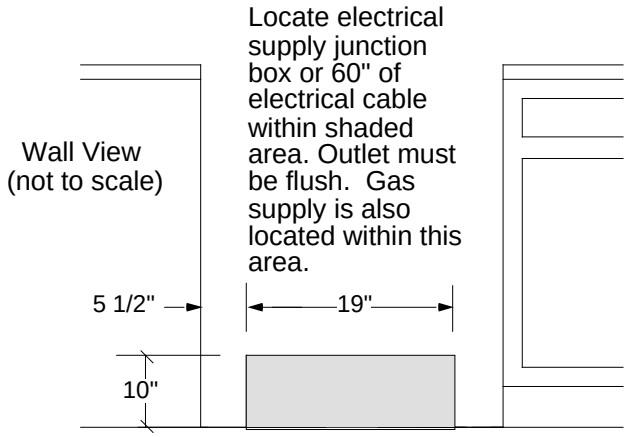

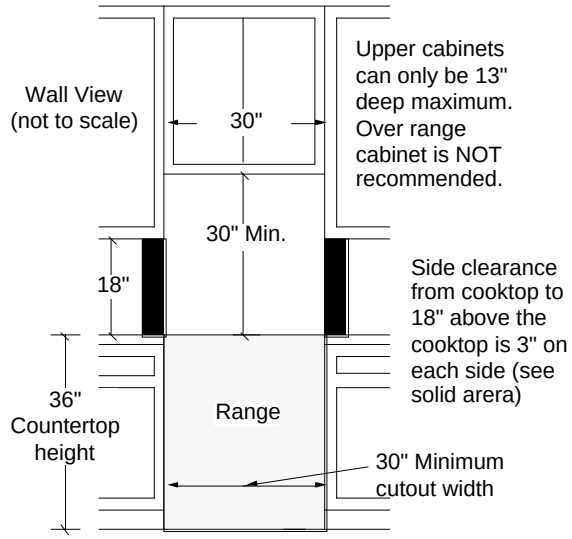

Subject to change without notice. This system is designed to be updated daily if necessary. Dimension Express is not responsible for use of superseded, voided, or outdated data sheets. Because of the difficulty or impracticability of determining actual damages, liability of Dimension Express shall not exceed $50.00.
Copyright © Dimension Express, 2002.

• NEVER reuse Data Sheets. Data Sheets are subject to change without notice. Dimension Express is a FREE service bureau and is updated daily, it makes far more sense to spend the time necessary to request new Data Sheets for each project, as opposed to the problems, time, costs, and risks associated with reusing old Data Sheets.

• Call Dimension Express if you have any questions at (775) 833-3633 •
• Always refer to a current Code at a Glance or manufacturer directory •
• Data Sheet codes change on the first of odd numbered months at 12:01am •

BN260.1 • A392B149 • • 020611 • 72422 • 84620

This Data Sheet Includes Information On
Maytag
• Product Model Number (s): •

Slide-In Gas Ranges:
MGS5770ADC and MGS5870ADC

Additional Information:

• Gas requirements: Gas supply line should be 3/4". Install a manual shutoff valve in an accessible location in the gas line external to this appliance for the purpose of turning on or shutting off gas to the appliance. The appliance is shipped from the factory equipped for use with natural gas and can be converted to LP gas in the field . The maximum gas supply pressure for both LP and natural gas is 14" WC. Minimum Pressure for Natural gas is 4" WC. Minimum Pressure for LP gas is 10" WC.

Kits:
• K70FILL : Filler kit for cutouts greater than 23 1/2".

Cutout opening
Slide-in instalation
(not to scale)

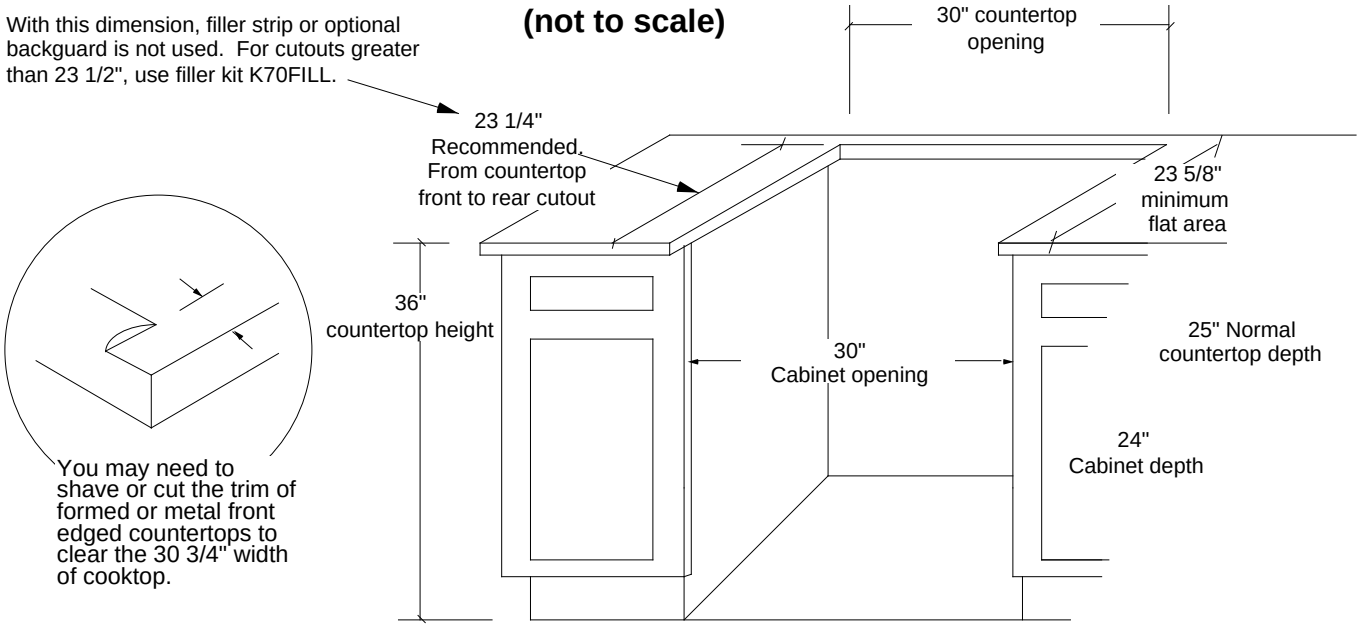

Subject to change without notice. This system is designed to be updated daily if necessary. Dimension Express is not responsible for use of superseded, voided, or outdated data sheets. Because of the difficulty or impracticability of determining actual damages, liability of Dimension Express shall not exceed $50.00.
Copyright © Dimension Express, 2002.

• NEVER reuse Data Sheets. Data Sheets are subject to change without notice. Dimension Express is a FREE service bureau and is updated daily, it makes far more sense to spend the time necessary to request new Data Sheets for each project, as opposed to the problems, time, costs, and risks associated with reusing old Data Sheets.

• Call Dimension Express if you have any questions at (775) 833-3633 •
• Always refer to a current Code at a Glance or manufacturer directory •
• Data Sheet codes change on the first of odd numbered months at 12:01am •